A8000
A8800
Cane Harvesters

Service Manual

Print No. 84156966
2nd Edition
English 12/09

CASE IH
AGRICULTURE

CASE IH AGRICULTURE

Service Tools Bulletin

Bulletin Number: ST07-39A
Date: 12/10/07

Attention: Parts & Service Managers

Case IH Axial Flow 7010 Combines

The following service tools are released for use on Case IH Axial Flow 7010 Combines.

380040209 — 9.0 Liter Engine Tool Kit

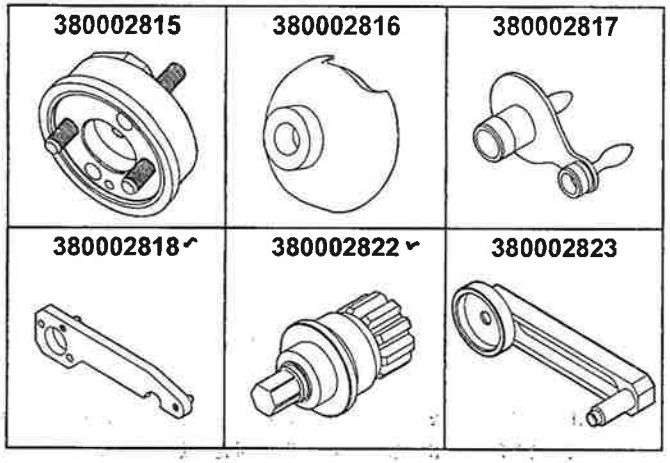

380002815 - Rear Crankshaft Seal Installer

380002816 - Flexible Belt Installation Tool

380002817 - Camshaft/High Pressure Pump Alignment Gauge

380002818 - Camshaft Alignment Gauge

380002822 - Engine Turning Tool

380002823 - Camshaft/Transmission Gear Alignment Gauge

Applications: Case IH Axial Flow 7010 Combines

Ordering Info: 380040209 - 9.0 Liter Engine Tool Kit; Refer to Service Tool Ordering Information.

Dealer Standard: Code A (Required at all service locations.)

TABLE OF CONTENT

Page

01 - MECHANICAL COMPONENTS

Torque Specification - Metric Fasteners 3
Torque Specification - Steel Hydraulic Fittings .. 5
Torque Specification - Steel Hydraulic O-ring Fittings 6
Special Torque Specification 7
Preloads Endfloats and Settings 8
Table of Loctite Products 9
Araldite 12
Topper (Standard) 13
Topper Shredder (Optional) 17
Side Trim Knives 25
45-Degree Crop Dividers 28
Crop Divider Trays 37
Floating Side Shoes 38
Knockdown Roller with Hydraulic Adjustment .. 39
Finned Roller 44
Feed Roller Train 45
- Buttlifter Roller 45
- Lower Rollers (Dual Drive) 46
- Lower Rollers (Single Drive) 47
- Upper Roller 48

Basecutter Gearbox 54
Chopper System 71
Elevator Slew 78
Elevator Assembly 85
Primary Extractor (Anti-Vortex) 99
Secondary Extractor Fan 116
Front Suspension 121
Pump Gearbox (Four-Hole Gearbox) 128
Reduction Hub Model 40 - A8000 130
Safety Brake (Wet Brake) - A8000 138
Reduction Hub Model 60 - A8800 (Until chassis A880080) 143
Brake Assembly - A8800 (Until chassis A880080) 153
Reduction Hub - A8800 (From chassis A880081) 159
Engine 196
Track 197
Idler Wheel 225
Cooling System 227

Page

02 - HYDRAULIC SYSTEMS

Precautions 3
Basic Principles of the Hydraulic System 4
Hydraulic System Pressure Control 4
Location of the Hydraulic Manifold Control Blocks (Right Side) 5
Location of the Hydraulic Manifold Control Blocks (Left Side) 6
Location of Hydraulic Motors 7
Location of Cylinders (A8000) 8
Location of Cylinders (A8800) 9
Components Specifications 10
Oil Specifications 13
Topper, Shredder and Side Trim Knife Circuit .. 14
Basecutter, Crop Dividers, Buttlifter Roller and Fixed Roller Circuit 22
Chopper, Feed Rollers, Knockdown Roller and the First and Second Floating Rollers Circuit 25
Primary Extractor Circuit 28
Elevator, Secondary Extractor and Bin Flap Circuit 31
Cylinders Control Circuit (A8000) 34
Cylinders Control Circuit (A8800) 35
Transmissions and Brakes 42
Transmission Pump Calibration 47
Checking the Accumulators Nitrogen Load 50

03 - HYDRAULIC COMPONENTS REPAIR

Basecutter Control Manifold 3
Primary Extractor Manifold 4
Chopper Control Manifold 5
Steering Control Manifold (A8000) 6
Gear Motors (Commercial) 7
Start-Up Procedure for Pumps 10
Flow Testing 11
Hydrostatic Transmission 14
Eaton Repairs 15

Page

Charge Pump and Check Valves 17
Electronic Displacement Control 20
I.P.O.R. Valve 21
Steering Cylinder (phasing) 22
Cylinders 27
Char-Lynn Motor & Steering Control 35
Track Adjuster Relief Valve 40
Accumulator 41
Counter Valve Balance (A8800) - optional 43
Positive Drive Valves (A8000) 44
Topper Manifold 45
Elevator Manifold 46
Primary Extractor Manifold 48
Top Feedroller Proportional Flow Control Manifold 49
Vickers Manifold - 4 and 6 banks 50
Notes 52

04 - ELECTRIC SYSTEMS

CHAPTER 1 - LOCATION OF HARNESSES, COMPONENTS AND CONNECTORS

Glossary 3
Harnesses Location 6
Layout of Harnesses 8
Layout of Connectors 21
Electrical Component Part Location 22
Scania Engine 36
IVECO Engine 38
Printed Circuit Board 44
Fuses Identification 44
Relay Identification 46

CHAPTER 2 - ELECTRICAL CONNECTORS

Main Control Harness (87733455) 3
Scania DC9 Engine Harness (84253504) 6
Elevator Hoses Harness (87733447) 24
Rear Right-Side Harness (84254471) 26
Iveco C9 Engine Harness (84253507) 29
Front Harness (87733453) 50
Auxiliary Block Harness (87733456) 60
Elevator Control Harness (87733446) 63
Topper Harness (87733454) 65
Rear Left-Side Harness (87733451) 66
Traction Pump Harness (87735777) 70
Cabin Harness (87697207) 74

Page

Console Harness 100
Machine Grounding Point 106

CHAPTER 3 - DETECTION AND TROUBLESHOOTING OF ELECTRICAL PROBLEMS, PROCEDURES

Introduction 3
Wiring harness repair 4
  Wiring harness temporary repair 4
  Wiring harness wire replacement 5
The digital multimeter 7
Electrical testing procedures 10
Circuit components - Description and basic tests 13
  Fuses 13
  Relays 17
  Connectors 18
  Resistance devices 19
  Fluid level transmitter 19
  Potentiometers 19
  Electro-magnetic devices 20
  Relays 20
  Solenoids 22
  Solenoid valves PWM 22
  Electronic modules (SCM) 23
  Sensors 25
  Temperature sensors 25
  Pressure transmitter 25

CHAPTER 4 - DATA BUS CAN NETWORK GENERAL VIEW

CAN Network 3
Troubleshooting 4
Interaction with Other Systems 8

CHAPTER 5 - ELECTRICAL SCHEMES

Electrical schemes 3
Operation of the Charge System Circuit 47
Operation of the Starter System Circuit 49
Operation of the Auto Tracker System Circuit 54
Operation of the Electronic Tracker Electrical Circuit 58
Operation of the Blower Control Circuit 59
Operation of the Air Control Circuit - Air Conditioning / Heating 59

Page

Operation of the A/C Compressor Protection Circuit 60
Operation of the Interior Rool Lamp Circuit 66
Operation of the Wiper / Washer System Circuit 68
Operation of the Cylinder Command Electrical Circuit 72
Operation of the Cylinder Auxiliary Block Electrical Circuit 75
Operation of the Basecutter Block Electrical Circuit 77
Operation of the Side Trim Knife Block Electrical Circuit 78

CHAPTER 6 - Troubleshooting

Códigos de Erros e Alarmes 3
Diagnóstico de Falhas dos ERROS 4
Diagnóstico de Falhas dos ALARMES 55
Tabela dos números e significados da gravidade das falhas 60

SECTION 01 - MECHANICAL COMPONENTS

CONTENTS

Section	Description	Page
01	Torque Specification - Metric Fasteners	3
	Torque Specification - Steel Hydraulic Fittings	5
	Torque Specification - Steel Hydraulic O-ring Fittings	6
	Special Torque Specification	7
	Preloads Endfloats and Settings	8
	Table of Loctite Products	9
	Araldite	12
	Topper (Standard)	13
	Topper Shredder (Optional)	17
	Side Trim Knives	25
	45-Degree Crop Dividers	28
	Crop Divider Trays	37
	Floating Side Shoes	38
	Knockdown Roller with Hydraulic Adjustment	39
	Finned Roller	44
	Feed Roller Train	
	Buttlifter Roller	45
	Lower Rollers (Dual Drive)	46
	Lower Rollers (Single Drive)	47
	Upper Roller	48
	Basecutter Gearbox	54
	Chopper System	71
	Elevator Slew	78
	Elevator Assembly	85
	Primary Extractor (Anti-Vortex)	99
	Secondary Extractor Fan	116
	Front Suspension	121
	Pump Gearbox (Four-Hole Gearbox)	128
	Reduction Hub Model 40 - A8000	130
	Safety Brake (Wet Brake) - A8000	138

Reduction Hub Model 60 - A8800 (Until chassis A880080) 143
Brake Assembly - A8800 (Until chassis A880080) 153
Reduction Hub - A8800 (From chassis A880081) 159
General information 160
Installation information 162
Engine 196
Track 197
Idler Wheel 225
Cooling System 227

WARNING: *When performing any service or maintenance on the harvester, always turn off the main switch, located on the floor on the left side of the operator's seat. Before performing any service/repair by using electric welding, turn off the main switch and, if possible, disconnect battery cables.*

TORQUE SPECIFICATIONS - DECIMAL FASTENERS

Use the torques shown in this table whenever the specified torques is not indicated.

These torques are used in fasteners with UNC and UNF threads, when they are supplied dried (non-lubricated) by the suppliers or when they are lubricated with engine oil. Not applicable if special graphite, molybdenum disulphide grease or other lubricants for extreme pressure are used.

Grade 5 Bolts, Screws and Stud Bolts		
Size	**Pound-inches**	**Newton meter**
1/4"	108 to 132	12 to 15
5/16"	204 to 252	23 to 28
3/8"	420 to 504	48 to 57
Size	**Pound-feet**	**Newton meter**
7/16"	54 to 64	73 to 87
1/2"	80 to 96	109 to 130
9/16"	110 to 132	149 to 179
5/8"	150 to 180	203 to 244
3/4"	270 to 324	366 to 439
7/8"	400 to 480	542 to 651
1.0"	580 to 696	787 to 944
1-1/8"	800 to 880	1085 to 1193
1-1/4"	1120 to 1240	1519 to 1681
1-3/8"	1460 to 1680	1980 to 2278
1-1/2"	1940 to 2200	2631 to 2983

Grade 8 Bolts, Screws and Stud Bolts		
Size	**Pound-inches**	**Newton meter**
1/4"	144 to 180	16 to 20
5/16"	288 to 348	33 to 39
3/8"	540 to 648	61 to 73
Size	**Pound-feet**	**Newton meter**
7/16"	70 to 84	95 to 114
1/2"	110 to 132	149 to 179
9/16"	160 to 192	217 to 260
5/8"	220 to 264	298 to 358
3/4"	380 to 456	515 to 618
7/8"	600 to 720	814 to 976
1.0"	900 to 1080	1220 to 1465
1-1/8"	1280 to 1440	1730 to 1953
1-1/4"	1820 to 2000	2468 to 2712
1-3/8"	2380 to 2720	3227 to 3688
1-1/2"	3160 to 3560	4285 to 4827

NOTE: Use thicker nuts with Grade 8 fasteners.

TORQUE SPECIFICATIONS – METRIC FASTENERS

Use the following torque values when torque specifications are not indicated.

These values are used in regular threads fasteners, in the way they are received from the suppliers, plated or not, or when they are lubricated with engine oil. These values are not applicable if graphite or molybdenum disulphide grease or oil is used.

Grade 8.8 Bolts, Screws and Stud Bolts

8.8

Size	Pound-inches	Newton meter
M4	24 to 36	3 to 4
M5	60 to 72	7 to 8
M6	96 to 108	11 to 12
M8	228 to 276	26 to 31
M10	456 to 540	52 to 61
Size	**Pound-feet**	**Newton meter**
M12	66 to 79	90 to 107
M14	106 to 127	144 to 172
M16	160 to 200	217 to 271
M20	320 to 380	434 to 515
M24	500 to 600	675 to 815
M30	920 to 1100	1250 to 1500
M36	1600 to 1950	2175 to 2600

Grade 10.9 Bolts, Screws and Stud Bolts

10.9

Size	Pound-inches	Newton meter
M4	36 to 48	4 to 5
M5	84 to 96	9 to 11
M6	132 to 156	15 to 18
M8	324 to 384	37 to 43
Size	**Pound-feet**	**Newton meter**
M10	54 to 64	73 to 87
M12	93 to 112	125 to 150
M14	149 to 179	200 to 245
M16	230 to 280	310 to 380
M20	450 to 540	610 to 730
M24	780 to 940	1050 to 1275
M30	1470 to 1770	2000 to 2400
M36	2580 to 3090	3500 to 4200

Grade 12.9 Bolts, Screws and Stud Bolts

12.9

Usually, torque values specified for grade 10.9 fasteners can be satisfactorily used for grade 12.9 fasteners.

TORQUE SPECIFICATIONS – STEEL HYDRAULIC FITTINGS

Straight Threads with O-ring			
Tube Outer Diameter (O.D.) / Hose Inner Diameter (I.D.)	Thread size	Pound-inches	Newton-meter
1/4" 6.4 mm	7/16-20	72 to 144	8 to 16
5/16" 7.9 mm	1/2-20	540 to 192	11 to 22
3/8" 9.5 mm	9/16-18	120 to 300	14 to 34
1/2" 12.7 mm	3/4-16	180 to 504	20 to 57
5/8" 15.9 mm	7/8-14	300 to 696	34 to 79
Tube Outer Diameter (O.D.) / Hose Inner Diameter (I.D.)	Thread size	Pound-feet	Newton-meter
3/4" 19.0 mm	1-1/16-12	77 to 82	104 to 111
7/8" 22.2 mm	1-3/16-12	90 to 100	122 to 136
1.0" 25.4 mm	1-5/16-12	110 to 120	149 to 163
1-1/4" 31.8 mm	1-5/8-12	140 to 150	190 to 204
1-1/2" 38.1 mm	1-7/8-12	225 to 240	305 to 325

Fitting with Grade 37 Dilatation			
Tube Outer Diameter (O.D.) / Hose Inner Diameter (I.D.)	Thread size	Pound-inches	Newton-meter
1/4" 6.4 mm	7/16-20	144 to 228	16 to 26
5/16" 7.9 mm	1/2-20	192 to 300	22 to 34
3/8" 9.5 mm	9/16-18	300 to 480	34 to 54
1/2" 12.7 mm	3/4-16	540 to 804	57 to 91
Tube Outer Diameter (O.D.) / Hose Inner Diameter (I.D.)	Thread size	Pound-feet	Newton-meter
5/8" 15.9 mm	7/8-14	58 to 92	79 to 124
3/4" 19.0 mm	1-1/16-12	80 to 128	108 to 174
7/8" 22.2 mm	1-3/16-12	100 to 160	136 to 216
1.0" 25.4 mm	1-5/16-12	117 to 187	159 to 253
1-1/4" 31.8 mm	1-5/8-12	165 to 264	224 to 357
1-1/2" 38.1 mm	1-7/8-12	250 to 400	339 to 542

Mounting Bolt with Split Flange		
Size	Pound-inches	Newton meter
5/16-18	180 to 240	20 to 27
3/8-16	240 to 300	27 to 34
7/16-14	420 to 540	47 to 61
Size	Pound-feet	Newton meter
1/2-13	55 to 65	74 to 88
5/8-11	140 to 150	190 to 203

SPECIAL TORQUE SPECIFICATIONS – STEEL HYDRAULIC O-RING FITTINGS

Face Sealing End with O-ring				
SAE Nominal Size	**Tube Outer Diameter**	**Thread Size**	**Pound-inches**	**Newton meter**
-4	1/4" 6.4 mm	9/16-18	120 to 144	14 to 16
-6	3/8" 9.5 mm	11/16-16	216 to 240	24 to 27
-8	1/2" 12.7 mm	13/16-16	384 to 480	43 to 54
-10	5/8" 15.9 mm	1-14	552 to 672	62 to 76
SAE Nominal Size	**Tube Outer Diameter**	**Thread Size**	**Pound-feet**	**Newton meter**
-12	3/4" 19.0 mm	1-3/16-12	65 to 70	90 to 95
-14	7/8" 22.2 mm	1-3/16-12	65 to 70	90 to 95
-16	1.0" 25.4 mm	1-7/16-12	92 to 100	125 to 135
-20	1-1/4" 31.8 mm	1-11/16-12	125 to 140	170 to 190
-24	1-1/2" 38.1 mm	2-12	150 to 165	200 to 225

O-Ring End with Protrusion Self-locking Nut or Fitting				
SAE Nominal Size	**Tube Outer Diameter**	**Thread Size**	**Pound-inches**	**Newton meter**
-4	1/4" 6.4 mm	7/16-20	204 to 240	23 to 27
-6	3/8" 9.5 mm	9/16-18	300 to 360	34 to 41
-8	1/2" 12.7 mm	3/4-16	540 to 600	61 to 68
SAE Nominal Size	**Tube Outer Diameter**	**Thread Size**	**Pound-feet**	**Newton meter**
-10	5/8" 15.9 mm	7/8-14	35 to 40	47 to 54
-12	3/4" 19.0 mm	1-1/16-12	60 to 70	81 to 95
-14	7/8" 22.2 mm	1-3/16-12	70 to 80	95 to 109
-16	1.0" 25.4 mm	1-5/16-12	80 to 90	108 to 122
-20	1-1/4" 31.8 mm	1-5/8-12	95 to 115	129 to 156
-24	1-1/2" 38.1 mm	1-7/8-12	120 to 140	163 to 190

SPECIAL TORQUE SPECIFICATIONS

FASTENER	Newton meter Value
Chopper Box Drive Stub Bolt	150
Chopper Box Drive Gear to Chopper Drum Bolt	300 to 350
Pump/Drive Gearbox Cover Plate Bolt	110
Gearbox Cover Plate to Flywheel Bolt	150
Reduction Hub Ring Gear Bolt (A8800)	110
Reduction Hub Ring Gear Bolt (A8000)	110
Reduction Hub to Drive Sprocket Bolt (A8800)	460 +/- 14
Grouser Plate to Track Chain Bolt	230
Traction Roller to Track Frame	230 +/- 14
Front Idler Adjuster Bracket Bolt	325 +/- 14
Dead Axle Bearing Retaining Nut	1200
Solenoid Valve Coil Retaining Nut	5 - 8

NOTE: *For torque values for valve and assemblies (e.g. engine, hydraulic components), please refer to the manufacturers specifications. Anti-seize is applied to all bolts that do not require fastening with Loctite (see chapter 2 for Loctite application). Cadmium plated bolts should not be used where Loctite has to be applied.*

PRELOADS ENDFLOATS AND SETTINGS

ITEM	Setting Imperial	Setting Metric
Basecutter Leg Bearing (Leg Basecutter)	Zero (Preload) Zero (Preload)	Zero (Endfloat) Zero (Endfloat)
Basecutter Gearbox Gears Backlash	0.007"	0.18mm
Basecutter Gearbox Idler (Gear Endfloat)	Zero	Zero
Reduction Hub (Bearing Preload)	20 lbs pull @ Wheel stud without seal	9 kg pull @ Wheel stud without seal
Reduction Hub Endfloat (Pinion)	.060" minimum	1.52mm minimum
Pump Drive Gearbox Backlash	0.006"	0.15mm
Pump Drive Gearbox Endfloat	0.008"-0.036"	0.20 -0.91mm
Chopper Flywheel Pinion Backlash	0.008"	0.20mm
Feed Roller Endfloat	0.275" Max. (0.197 spacers available)	7mm Max. (5 mm spacers available)
Feed Roller Runout (Sidewall) R.T.	0.060" Max.	1.5mm Max.
Feed Roller Runout (Sidewall) F.T.	Zero (Slight Drag)	Zero (Slight Drag)
Front Wheel Bearing Preload	1"	25mm
Elevator Chain Play	37.5°	37.5°
Engine Radiator Fan Angle	100 in.lbs	11.3 nm
Chopper Flywheel Slip Clutch Spring Setting (Initial)	Zero	Zero
Vertical Arm Extractor Bearing Preload	Zero	Zero

TABLE OF LOCTITE PRODUCTS

Product	Color	Similar Products	Gap (Inches)	Strength (Steel/Steel)	Operating Temperature Range Fahrenheit	Fixture Time / Total Cure (Steel/Steel)	Description
#3	Dark Brown					24 hrs	Creates a Flexible Seal (works with oil, fuel or grease)
80	Yellow					Fast	Impermeable Adhesive
123	Transparent					N/A	Cleaning Fluid for Parts
220	Blue	290	0.003	57/143 lbs	-65 to +250	6 min/24 hrs	Threadlocker for Air Exhaust
221	Purple	222	0.005	75/44 lbs	-65 to +300	2 min/24 hrs	Low-Strength Threadlocker
222	Purple		0.005	53/30 lbs	-65 to +300	20 min/24 hrs	Low-Strength Threadlocker (small bolts)
225	Brown	222	0.010	45/25 lbs	-65 to +300	7 min/24 hrs	Low-Strength Threadlocker
242	Blue		0.005	80/50 lbs	-65 to +300	10 min/24 hrs	Medium-Strength Threadlocker
262	Red	271	0.005	160/190 lbs	-65 to +300	5 min/24 hrs	High-Strength Threadlocker
270	Green	271	0.007	160/320 lbs	-65 to +300	3 min/24 hrs	High-Strength Threadlocker
271	Red	262	0.007	160/320 lbs	-65 to +300	10 min/24 hrs	High-Strength Threadlocker
272	Red	620	0.007	180/220 lbs	-65 to +450	30 min/24 hrs	High Temperature, High Strength
275	Green	277	0.010	210/300 lbs	-65 to +300	3 min/24 hrs	High-Strength Threadlocker
277	Red		0.010	225/300 lbs	-65 to +300	60 min/24 hrs	High-Strength Threadlocker
290	Green		0.003	85/350 lbs	-65 to +300	6 min/24 hrs	Threadlocker for Air Exhaust
*404	Transparent	495	0.006	3200 psi	-65 to +180	30 s/24 hrs	Instant Adhesive
*406	Transparent		0.004	3200 psi	-65 to +180	15 s/24 hrs	General Purpose Adhesive
*409	Transparent	454	0.008	2500 psi	-65 to +180	50 s/24 hrs	Instant Adhesive Gel
*414	Transparent		0.006	2500 psi	-65 to +180	30 s/24 hrs	Instant Adhesive
*415	Transparent	454	0.010	2500 psi	-65 to +180	50 s/24 hrs	Instant Adhesive for Gap Filling (Metal)
*416	Transparent	454	0.010	2500 psi	-65 to +180	50 s/24 hrs	Instant Adhesive for Gap Filling (Plastic)

TABLE OF LOCTITE PRODUCTS (continued)

Product	Color	Similar Products	Gap (Inches)	Strength (Steel/Steel)	Operating Temperature Range Fahrenheit	Fixture Time / Total Cure (Steel/Steel)	Description
*420	Transparent		0.002	2500 psi	-65 to +180	15 s/24 hrs	Instant Adhesive for Air Exhaust
*422	Transparent	454	0.020	2800 psi	-65 to +180	60 s/24 hrs	Instant Adhesive for Gap Filling
*430	Transparent		0.005	2500 psi	-65 to +180	20 s/24 hrs	Adhesive for Bonding Metals
*445	White/Black		0.250	2000 psi	-65 to +180	5 min/24 hrs	Two-Part Epoxy, Fast Cure
*454	Transparent		0.010	3200 psi	-65 to +180	15 s/24 hrs	General Purpose Adhesive Gel, Instant Adhesive
*495	Transparent		0.004	2500 psi	-65 to +180	20 s/24 hrs	General Purpose Instant Adhesive
*496	Transparent		0.005	2500 psi	-65 to +180	20 s/24 hrs	Adhesive for Bonding Metals
504	Light Orange	515	0.030	750 psi	-65 to +300	90 min/24 hrs	Replaces Rigid Seal
509	Light Blue		0.020	750 psi	-65 to +320	6 hrs/72 hrs	Flange Sealant
510	Red		0.020	1000 psi	-65 to +400	30 min/24 hrs	Replaces High-Temperature Seal
515	Purple		0.010	750 psi	-65 to +300	1 hrs/24 hrs	Replaces # 515 Seal
518	Red	515	0.030	500 psi	-65 to +300	1 hrs/24 hrs	Replaces # 518 for Aluminium
542	Brown	569	N/D	132/92 lbs	-65 to +300	2 hrs/24 hrs	Hydraulic Sealant
545	Purple		N/D	25/20 lbs	-65 to +300	4 hrs/24 hrs	Low-Strength Hydraulic/Pneumatic Sealant
549	Orange	504	0.020	2500 psi	-65 to +300	2 hrs/24 hrs	Plastic Seal for Instant Sealing
554	Red	277	0.015	240/240 lbs	-65 to +300	2 a 4 hrs/24 hrs	Coolant Sealant
567	White	592	N/D	500 psi	-65 to +400	4 hrs/24 hrs	Stainless Steel Pipe Sealant
568	Orange	277	0.015	2500 psi	-65 to +300	12 hrs/24 hrs	Plastic Seal
569	Brown	545	0.010	40/25 lbs	-65 to +300	1 hrs/24 hrs	Hydraulic Sealant
570	Brown	592	N/D	25/40 lbs	-65 to +300	6 hrs/72 hrs	Steam Sealant
571	Brown	592	0.015	40/20 lbs	-65 to +300	2 a 4 hrs/24 hrs	Pipe Sealant
572	White	578.575	N/D	80/27 lbs	-65 to +300	24 hrs/72 hrs	Seal
592	White		0.020	500 psi	-65 to +400	4 hrs/72 hrs	Pipe Sealant with Teflon
593	Black		0.250	400 psi	-95 to +400	30 min/24 hrs	RTV Silicone
601	Green	609	0.005	3000 psi	-65 to +300	10 min/24 hrs	Current PIN 609
609	Green		0.005	3000 psi	-65 to +300	10 min/24 hrs	General Purpose Retaining Compound

TABLE OF LOCTITE PRODUCTS (continued)

Product	Color	Similar Products	Gap (Inches)	Strength (Steel/Steel)	Operating Temperature Range Fahrenheit	Fixture Time / Total Cure (Steel/Steel)	Description
620	Green	640	0.015	3000 psi	-65 to +450	30 min/24 hrs	High-Temperature Retaining Compound
635	Green	680	0.010	4000 psi	-65 to +300	1 hrs/24 hrs	High-Strength Retaining Compound
638	Green	680	0.015	4100 psi	-65 to +300	10 min/24 hrs	High-Strength Retaining Compound
640	Green	620	0.007	3000 psi	-65 to +400	1 hrs/24 hrs	High-Temperature Retaining Compound
660	Silver		0.020	3000 psi	-65 to +300	20 min/24 hrs	Quick Metal
675	Green	609	0.005	3000 psi	-65 to +300	20 min/24 hrs	General Purpose Retaining Compound
680	Green	635	0.015	4000 psi	-65 to +300	10 min/24 hrs	High-Strength Retaining Compound
706	Transparent	755	N/A	N/A	N/A	N/A	Cleaning Solvent
707	Amber		N/A	N/A	N/A	N/A	Activator for Structural Adhesives
736	Amber		N/A	N/A	N/A	N/A	NF Manual
738	Amber		N/A	N/A	N/A	N/A	Activator
747	Yellow	N/A	N/A	N/A	N/A	N/A	T Primer
751	Transparent		N/A	N/A	N/A	N/A	Activator for Structural Adhesives
755	Transparente		N/A	N/A	N/A	N/A	Cleaning Solvent
764	Green		N/A	N/A	N/A	N/A	N Primer
767	Silver		N/A	N/A	-65 to +1600	N/A	Anti-corrosive Lubricant

ARALDITE

On the following pages of this Service Manual, there are references about the use of "Araldite" on the assembling of several components of the harvester. "Araldite" is the commercial name used for a 2-part epoxy resin. There are two kinds of Araldite, "regular" ("normal") (white and blue tubes) and "5-minute" (red and white tubes). The "Araldite normal" is available at CASE IH Austoft, in 250g packages (P/N CM801234).

The main function of "Araldite" is to create a plastic coating between the metal surfaces of certain components, preventing movements and friction, so extending the components' working life.

When assembling CASE IH Austoft machines, only "Araldite normal" shall be used. This will assure that the resin reaches its maximum resistance. This Araldite will be dried within one hour and will reach its maximum resistance in 24 hours. The "5-minute" type will be dried within five minutes and will reach its cure in one hour. HOWEVER, it will not have the same cure resistance and shall only be used for temporary repairs (e.g., to return the machine to the field on the same day and perform the appropriate repair as soon as possible.)

Usage

To get "Araldite" ready for use, you shall use equal amounts of each tube and mix them until you obtain a uniform consistence. An incomplete mixture will affect the cure resistance.

The components surfaces where the "Araldite" will be used shall be clean and free of oil or grease.

SUGESTION: *Mix small amounts of Araldite, good enough to make one single application. If the "Araldite" starts to harden before its application on the components, the cure resistance will be affected.*

When using "Araldite" to fill slots, apply the product on both surfaces (inner and outer surfaces), so that the slots are evenly coated when the components are glued together.

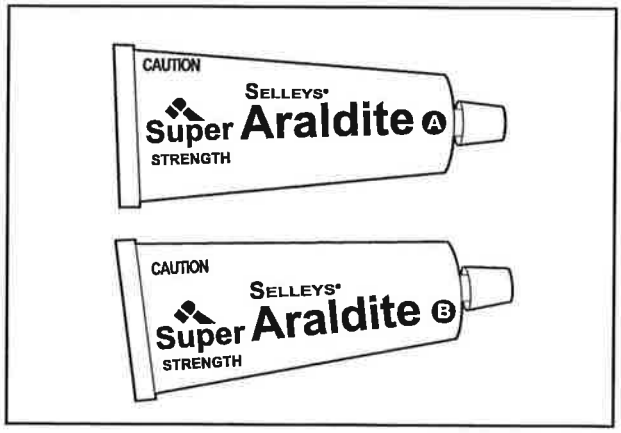

1

NOTE: *Remove the excess of "Araldite". When using "Araldite" near seals, make sure that no excess adheres to the seal , as this could damage it. To prevent this, make sure that no excess of "Araldite" is being used and cover the seal with grease or petroleum jelly.*

When using "Araldite" near bearings, make sure that no excess get into the bearings.

For some areas, "Araldite" can be used to eliminate possible gaps on the screws holes. This is the case on the chopper drum, when the mounting bolts are removed. In this case, the application of "Araldite" prevents movements among components and the subsequent loss of screws.

Removal

When disassembling components assembled with "Araldite", the use of a heating source will help to "break" the bonding between the components. The heat source can also be used to help in removing the "old" "Araldite"; the cleaning is important for the reassembling.

TOPPER (STANDARD)

DESCRIPTION

The topper comprises a strong chassis on which the two gathering drums are mounted, individually driven by type KS Char-Lynn "S", 1 1/4", of 14 pol³ orbital motors.

The topper disc has eight blades and it is mounted between the gathering drums; it is driven by a Commercial M31 motor with 1-1/2" gear.

Care should be taken to assure that all bolts and nuts are well tightened and secure all the time to reduce the risk of damages on stationary and rotating components.

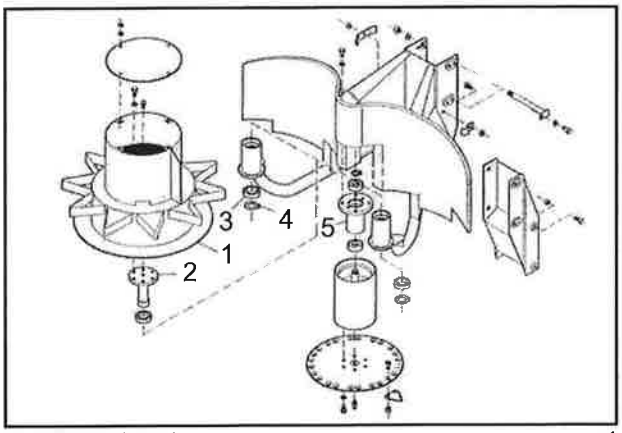

1 - Gathering drum 1
2 - Driv shaft
3 - Snap ring
4 - Bearing
5 - Bearing housing

DISASSEMBLY

Gathering Drums and Bearings Removal

1. Remove the six bolts fastening the gathering drums (1) to the drive shaft (2) and remove the drum from the topper frame.
2. Remove all hoses from the motors and plug their ends.
3. Remove the bolt holding the Char-Lynn motor, leaving the motor shaft free from the drive shaft (2).
4. Mark the right side and left side motors and install the key.
5. Remove the snap rings (3) from the drive shaft and press in the shaft thru the bearings (4).

   Now the bearings can be removed from the bearing housing with a slight tap.

Topper Disc Removal

Release:

1. The hydraulic lines and plug their ends.
2. The two bolts fastening the motor on the frame and remove the motor.
3. The four bolts fastening the bearing housing (5) on the frame and remove the bearing housing.
4. With the bearing housing free from the frame, remove the snap ring on the shaft top and press out the drive shaft.

   Now the bearings can be removed from the bearing housing with a slight tap.

CAUTION DURING DISASSEMBLY

- *Check the bearings condition and replace them as necessary.*
- *Check the hub wear and replace it as necessary.*
- *Check the drum balance.*
- *Check the wear condition of mounting bushing and pins, and replace them as necessary.*

ASSEMBLY

1. With the help of a driver, install the bearings on both sides of the hub. The bearing is on its final correct position when it seats onto the housing.

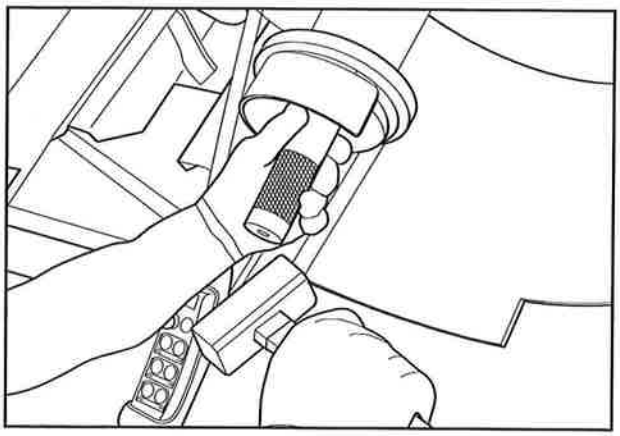

2

2. Apply anti-seize on the coupling and, with the help of a soft hammer, install it in the bearing housing, mounted on the previous step. After assembling, check if the assembly rotates freely.

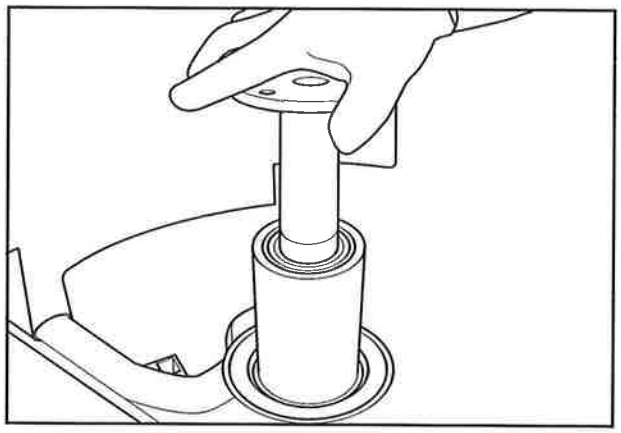

3

3. With the help of a snap ring pliers, position and install the snap rings on the opposite side of the coupling, one in each side of the assembly.
4. Apply anti-seize on the motor shafts, apply Ultra Black on motor mounting surfaces and fasten all assemblies with the bolts and nuts. Apply Loctite 262 on the bolt threads.

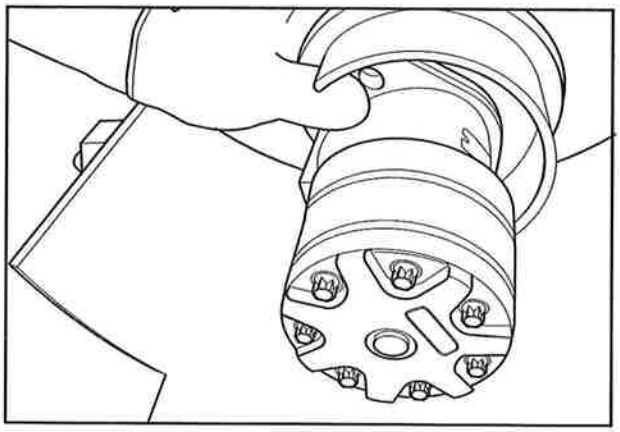

4

5. Assembly of central cutter:

   With the help of a driver, install the bearings. Position the mounted assembly and install it carefully into the hub. If necessary, gently tap on the assembly with a soft maul for the correct positioning. Next, install the snap ring. Position the assembly on the topper housing and fasten it with the four bolts and four washers. Apply Loctite on the bolt threads.

   Apply Ultra Black on the hydraulic motor gasket, apply anti-seize on the motor shaft and install it on the assembly mounted on the previous step, matching it with the splined housing. Fasten the motor with the bolts and washers. Apply Loctite 262 on the bolt threads.

   Position the closing cover under the mounted assembly and fasten it with the bolts and washers. Fasten the grease fitting and lubricate the assembly with grease.

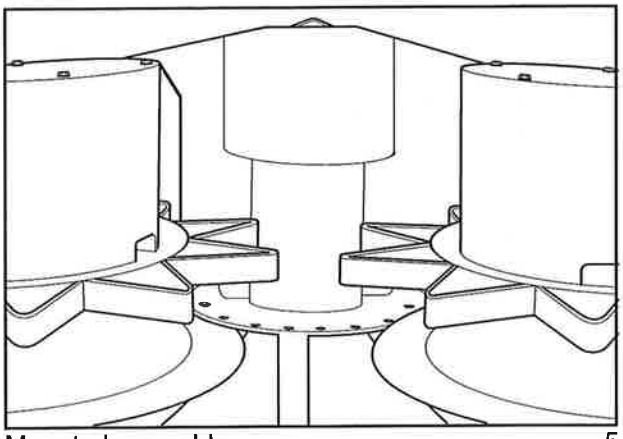

Mounted assembly 5

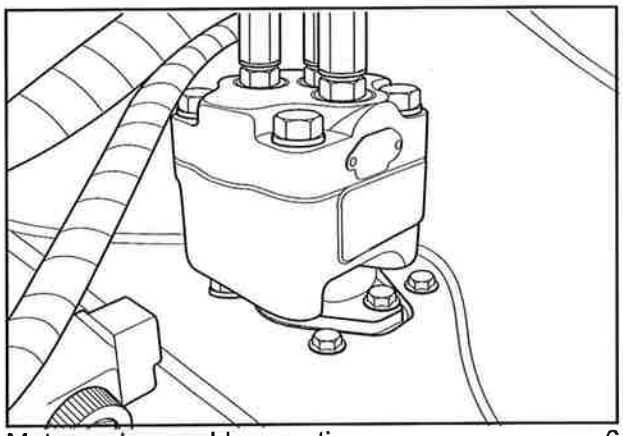

Motor and assembly mounting 6

6. Cane gathering drums assembly.

   Position the drum on the hub assembled on step 2 and fasten it with the bolts and washers. Install the grease fitting and lubricate the assembly with grease. Position the upper cover and fasten it with the bolts, plain washers and lock washers. Repeat the procedure for the other side of the assembly.

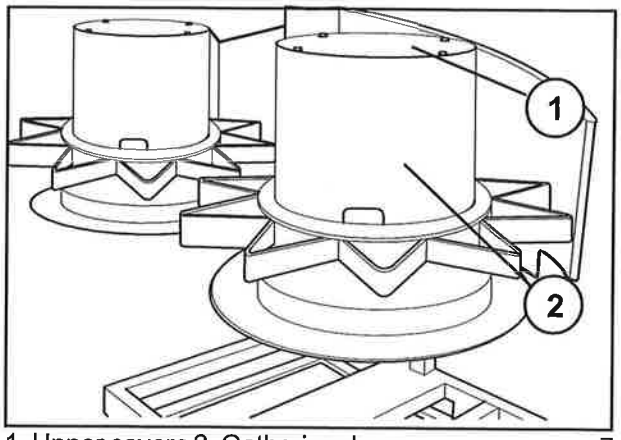

1. Upper coverç 2. Gathering drum 7

7. Position the hydraulic control, fastening the rear and front sides with the bolts, plain washers and lock washers.

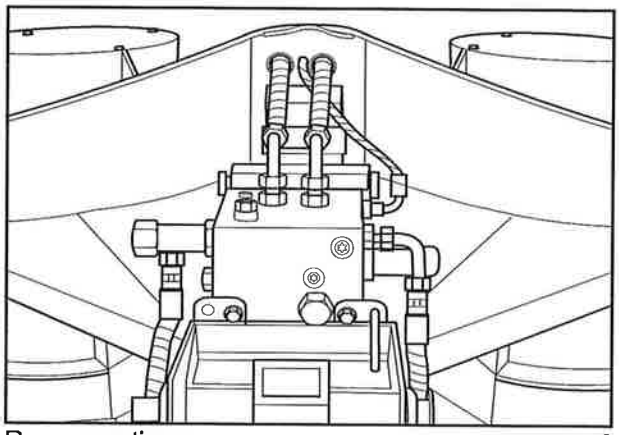

Rear mounting 8

TOPPER SHREDDER (OPTIONAL)

DESCRIPTION

The shredder comprises a strong chassis on which the two gathering discs are assembled, individually driven by type KS Char-Lynn "S", 1 1/4" orbital motors.

The 24 blades drum is assembled between the gathering discs, with ten screwed blades on the frame (five in each side), so that there is no contact between the blades.

The drum is driven by a Commercial M50 motor with a 2-1/4" gear. Care should be taken to assure that all bolts and nuts are well tightened and secure all the time to reduce the risk of damages on stationary and rotating components.

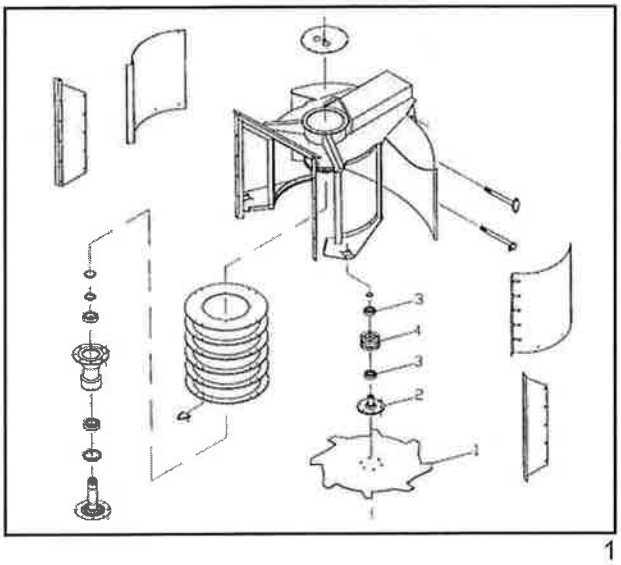

1

DISASSEMBLY

Gathering Discs and Bearings Removal

1. Remove the six bolts fastening the gathering discs to the drive flanges (1).
2. Remove the hoses from the motors (Plug all oil lines).
3. Remove the two bolts fastening the two Char-Lynn motors to the bearing frame and remove the motors.
4. Mark the right side and left side motors and fasten the key.
5. Remove the snaps rings from the shaft (2), then remove the bearings (3) pressing the shaft downwards .
6. The bearings should be removed from the bearing housing (4) with slight taps.

Shredder Drum Removal

1. After removing the gathering discs, the shredder drum can be removed.

WARNING: *The blades in the shredder drum are very sharp; so, you have to take care when removing and carrying the shredder drum.*

2. Support the shredder drum and remove the eight bolts fastening the drum to the shaft.

   Next, remove the drum.

CAUTION DURING DISASSEMBLY

- *Check the bearings condition and replace them as necessary.*
- *Check the hub for wear and replace it as necessary.*
- *Check the drum balance.*
- *Check the mounting bushing and pins for damages, and replace them as necessary.*

ASSEMBLY

1. Fastening the wear plate

1.1. Fasten the wear plate on the frame, using the bolts, plain washers and nuts.

NOTE: *The washers should be installed first with the bolt and then with the nut.*

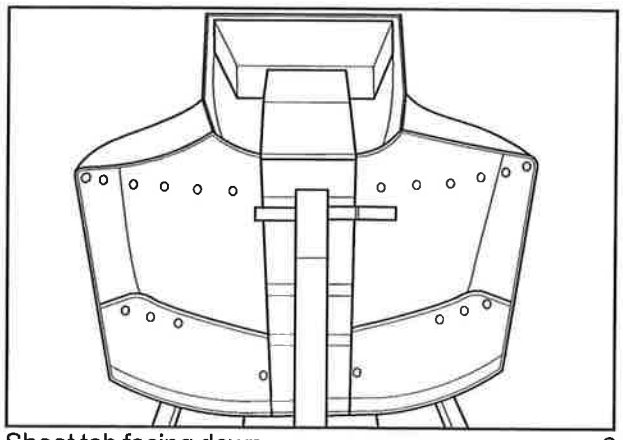

Sheet tab facing down 2

2. Bearing pre-assembly

2.1. With the help of a driver, install the bearings.

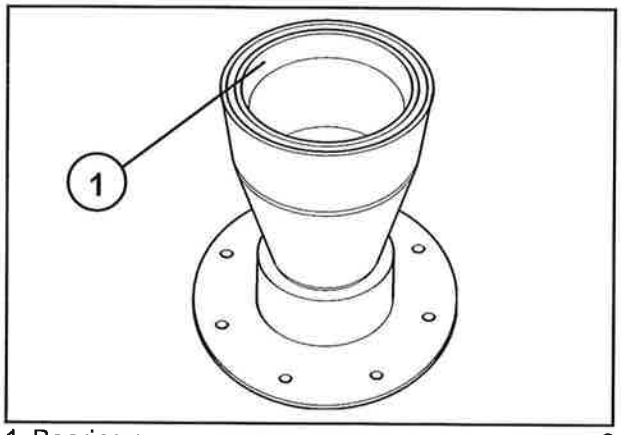

1. Bearing cup 3

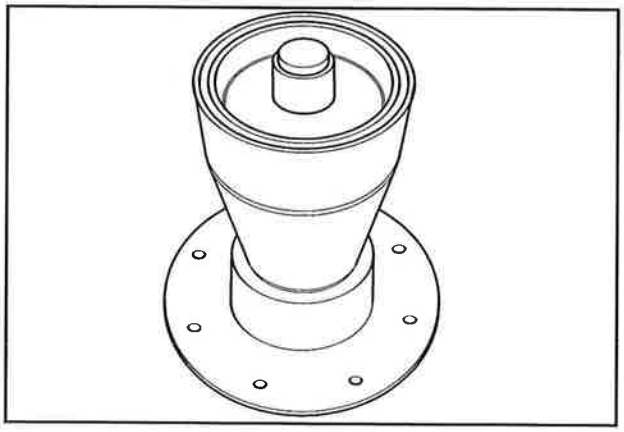

4

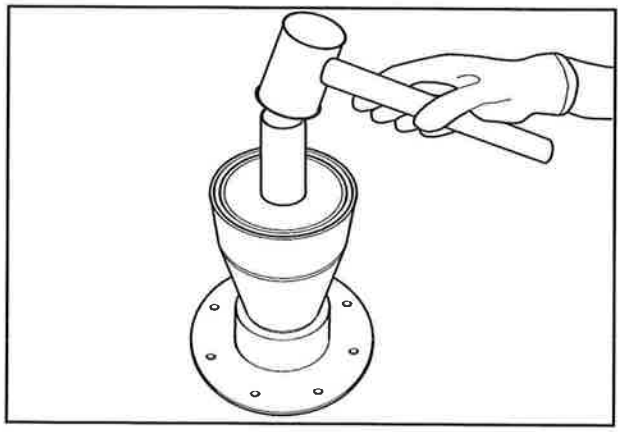

5

2.2. After installing the bearings, install the seal using an installer to fit it in place.

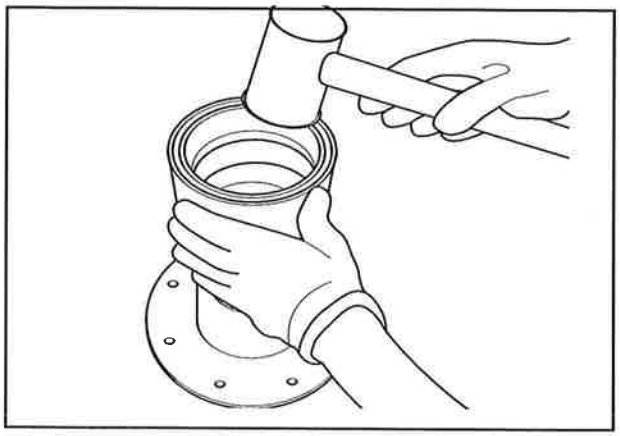

6

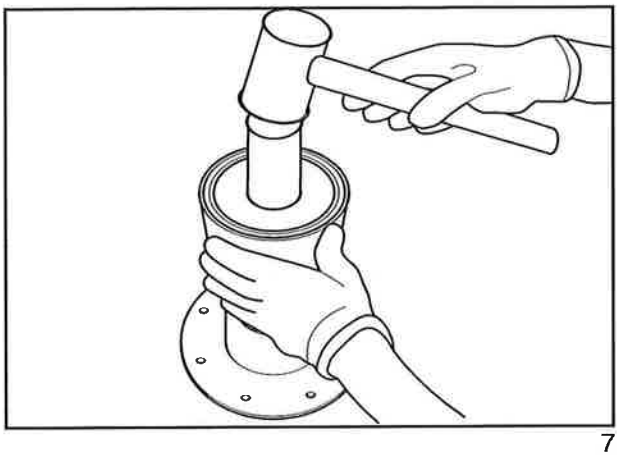

7

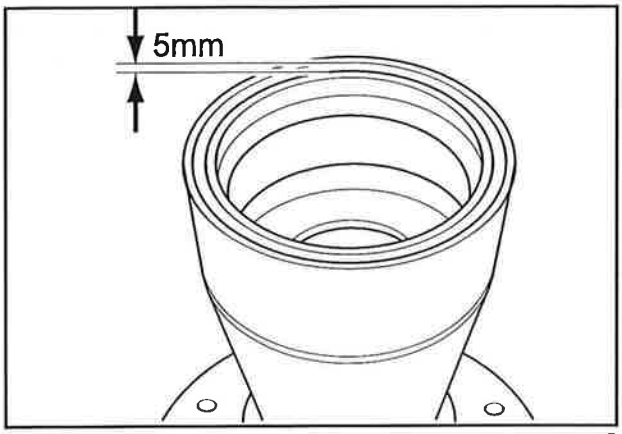

Observe the final position – 5 mm 8

2.3. After installing the seal, turn the bearing housing, and with the help of an installer , install the bearing cup used to lock it.

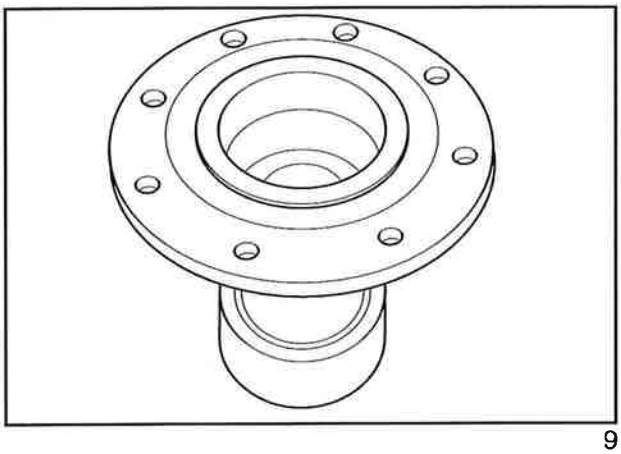

9

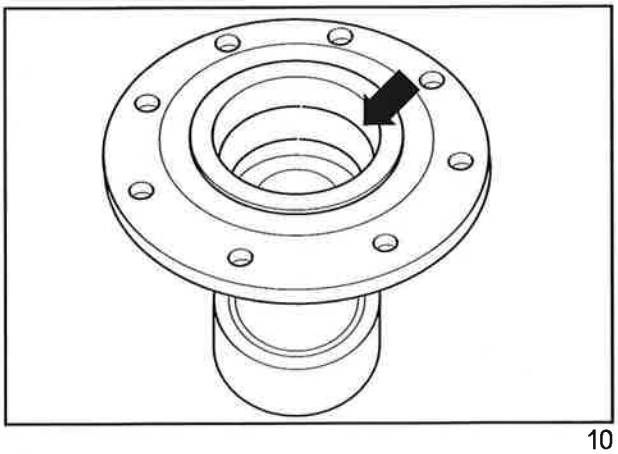

10

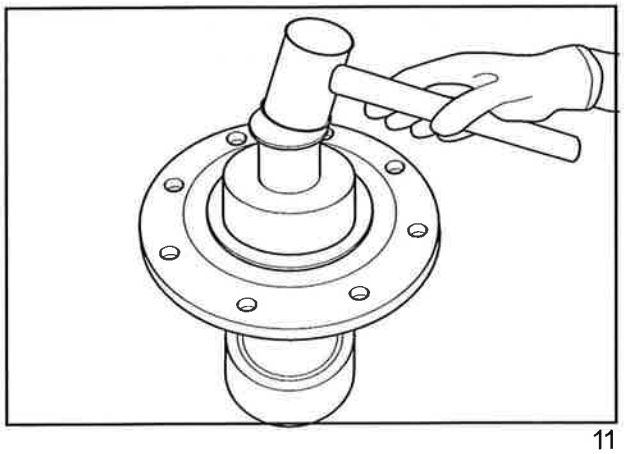

11

3. Motor housing pre-assembly and assembly; gathering shaft and shaft motor assembly

3.1. Apply anti-seize on the housings and install the bearings in each housing with the help of an installer. After installed the bearings, install the two grease fittings.

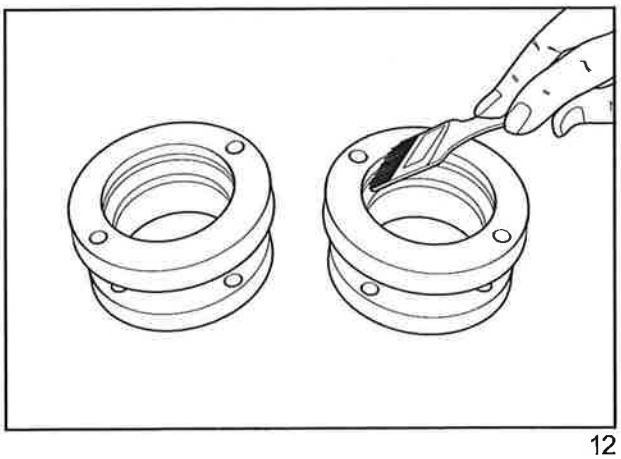

12

3.2. Place the mounted housing assembly on the shredder frame using the bolts and washers.

NOTE: *Apply Loctite 271 on the bolts.*

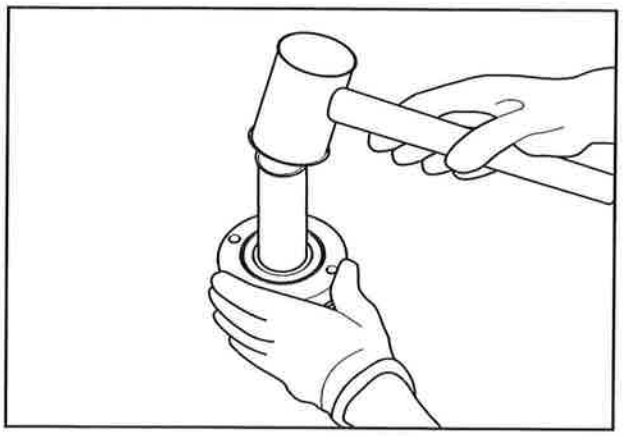

13

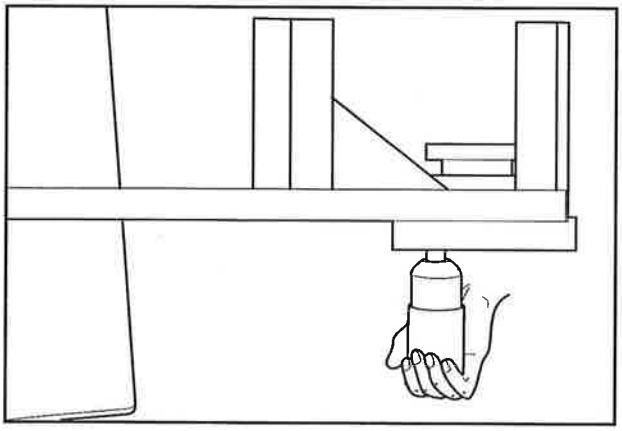

14

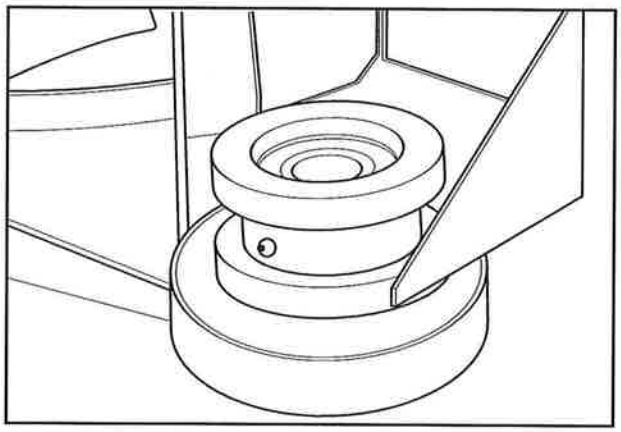

Observe the correct position for the grease fitting 15

3.3. Apply anti-seize on the gathering shafts and position them in the housings, locking them with the snap ring.

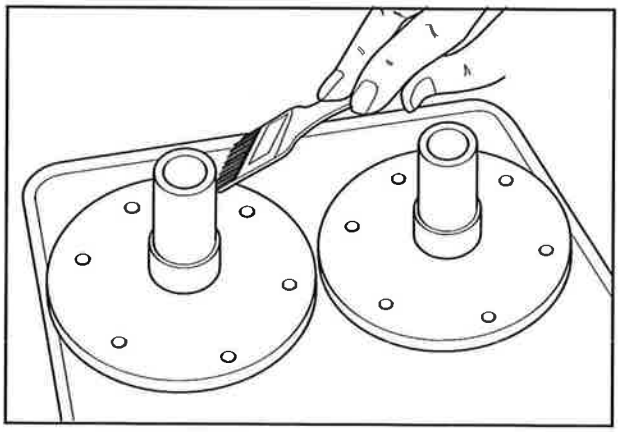

16

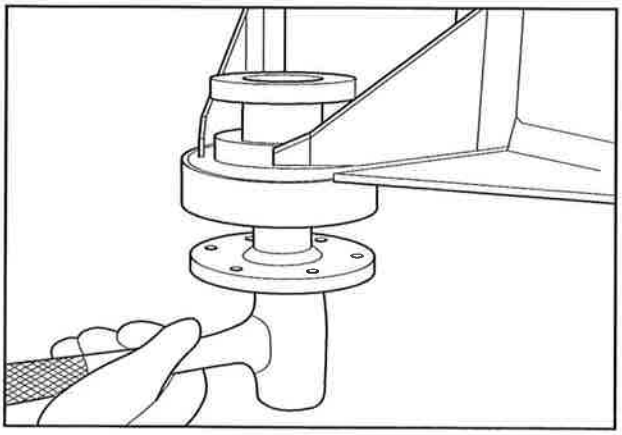

17

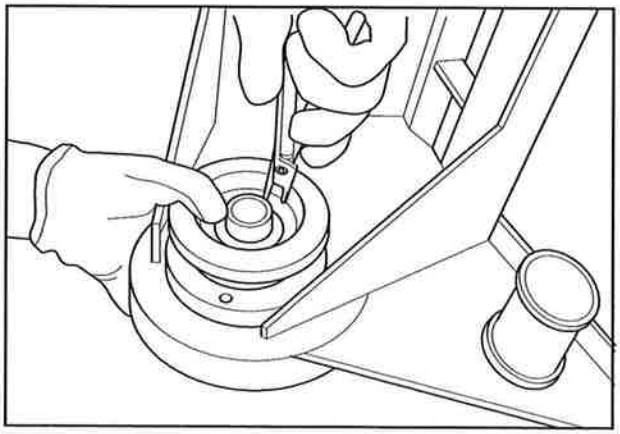

18

3.4. Apply anti-seize on the motors shafts and Loctite 598 black on the motors base.

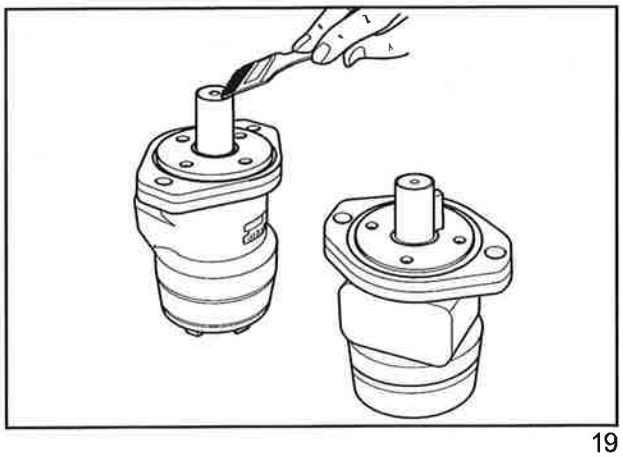

19

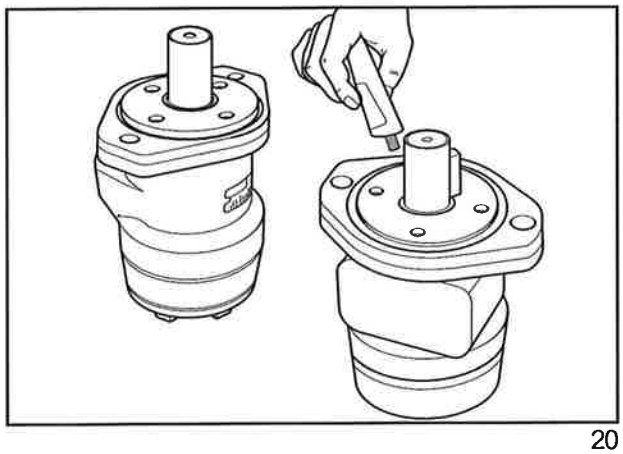

20

3.5. Place the motors on the respective gathering shafts, fastening each motor with the bolts and lock washers.

NOTE: *Apply Loctite 271 on the bolts.*

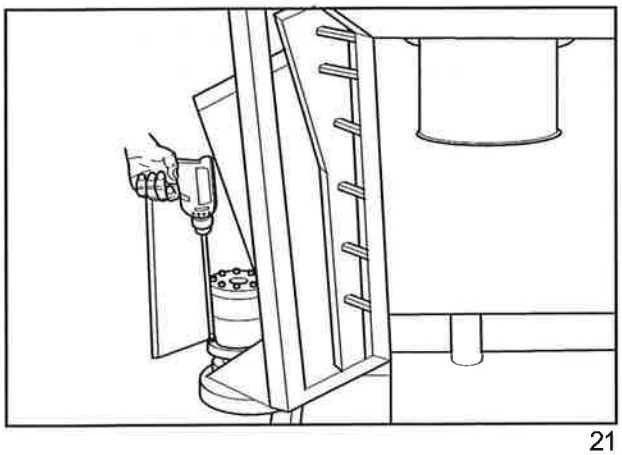

21

4. Assembling the bearing housing and the blades on the frame

4.1. Install eye bolts on the bearing housing so it can be lifted. After lifting, fasten the bearing housing with the bolts and lock washers. Remove the eye bolts and the overhead crane only after tighten them.

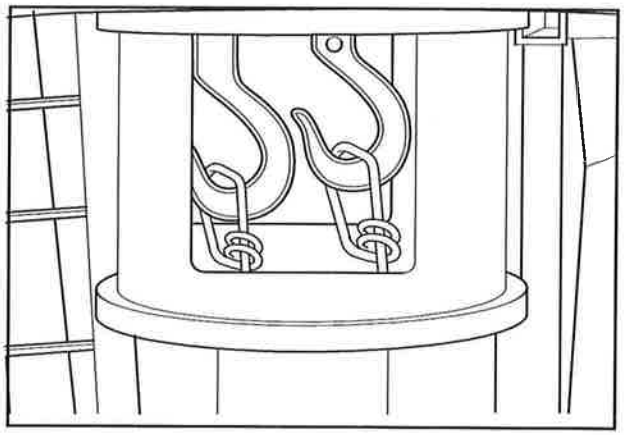

22

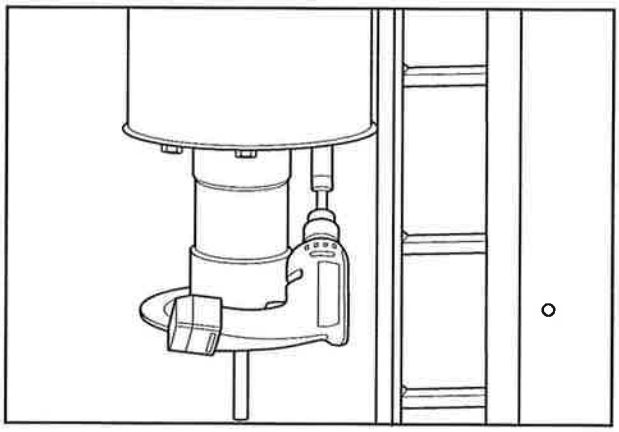

23

4.2. Install the 10 blades on the shredder frame, fastening them with the bolts and nuts.

NOTE: *Observe the correct position for the blades and bolts.*

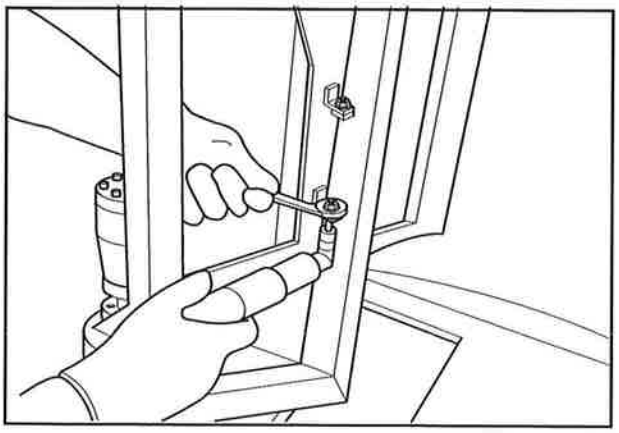

24

5. Assembling the front and side panels (left side/ right side).

5.1. To assemble the left side and right side panels, use bolts, plain washers and nuts.

NOTE: *The tabs shall be fastened with the front panels, after installing them.*

A - Use bolts, plain washer and nuts for fastening.

B - The inner bolts should be tightened with the side panels. Use bolts, plain washers and nuts.

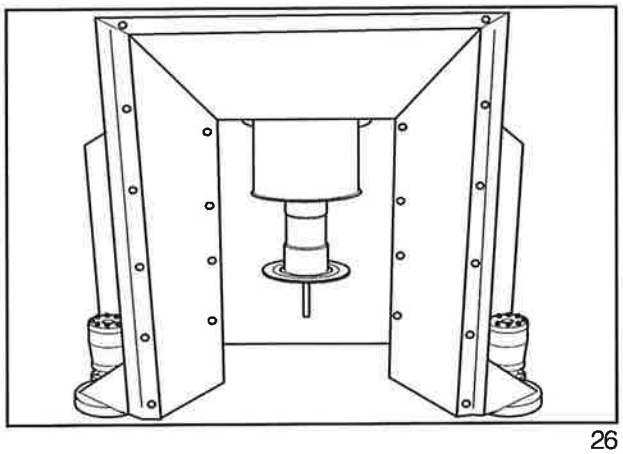

26

6. Assembling the drum on the shredder

6.1. To assemble the drum on the frame, position it as indicated in the figure on the right.

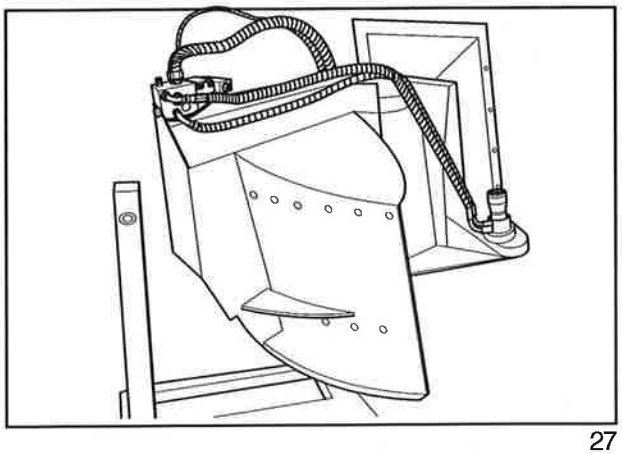

27

6.2. To fasten the drum (straight blade), observe the correct matching position and place it on the frame, using the bolts to fasten it.

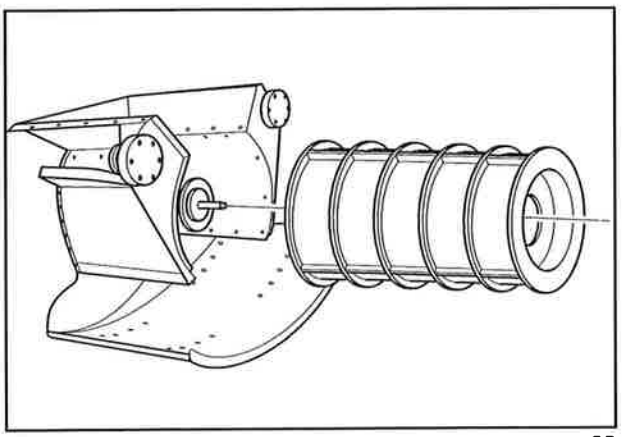

28

7. Assembling the shredder blades

7.1. Place the 20 blades on the drum (check the correct position for the blades in the figure on the right), fastening them with the bolts.

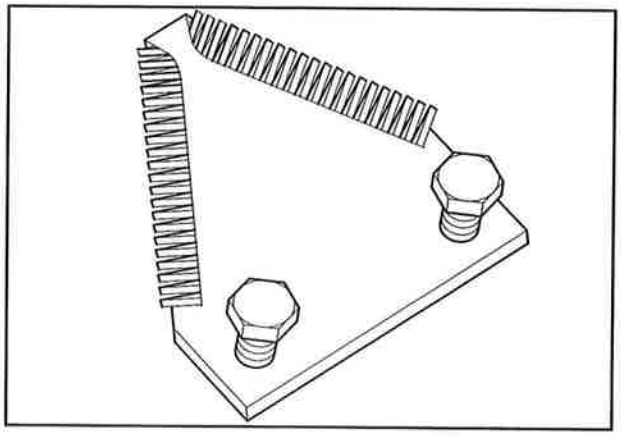

29

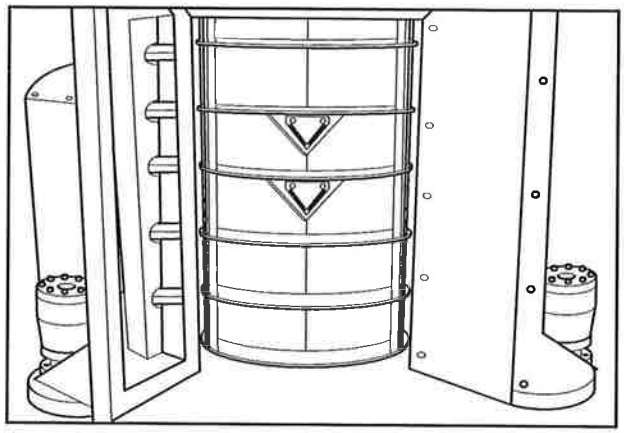

30

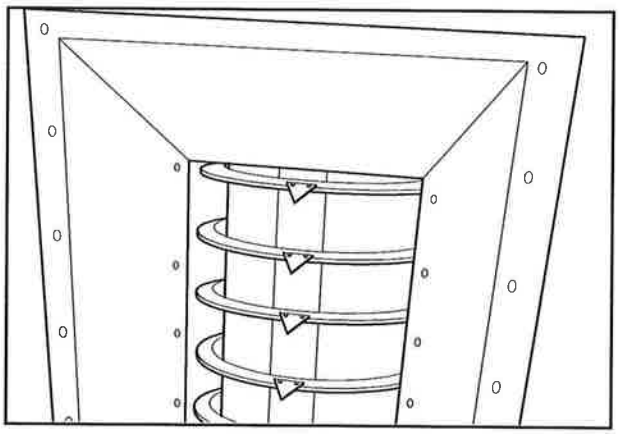

31

8. Assembling the shredder drum cover

8.1. To install the cover on the drum, use 04 blades which assembled position is inverse to the other blades already installed in the drum. Fasten the cover with the blades, using the bolts and nuts.

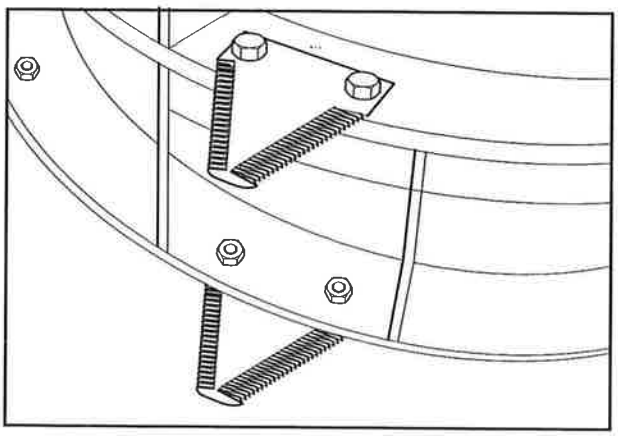

32

9. Assembling the shredder disc

9.1. Install two discs on the shredder shafts, as indicated in the figure.

NOTE: *Apply Loctite 271 on the bolt threads.*

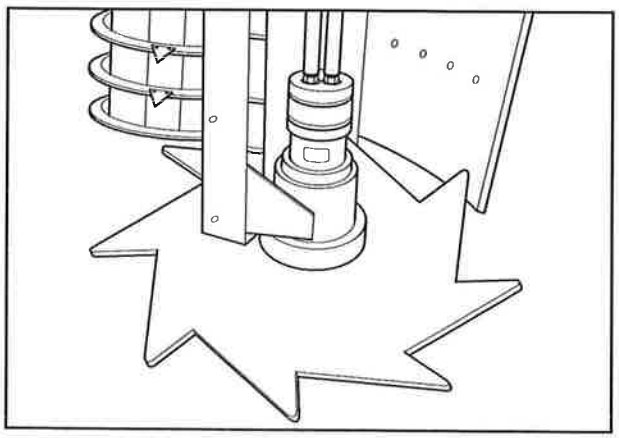

33

SIDE TRIM KNIVES

DESCRIPTION

For thick plantations, the trim knives are assembled on the outer side of each crop divider.

The side trim knife comprises a circular disc with eight screwed blades and driven by an orbital motor Char-Lynn 2000 4.9 in³.

The side trim knives can be manually or hydraulically lifted or lowered by commands inside the cabin (optional).

DISASSEMBLY

1. Remove the hydraulic hoses and plug their ends.
2. Remove the eight bolts fastening the motor base to the frame.
3. Remove the bolts fastening the retracted cylinders on the motor supporting assembly.
4. The side trim knife assembly now can be disassembled; a tool can be used to remove the knife (1), after removing the retaining plate.
5. To remove the Char-Lynn motor (2), loose the two bolts (3) and remove the motor from the mounting plate.

CAUTION DURING DISASSEMBLY

- *Check for any leak.*
- *Check the knives for their condition.*
- *Check the disc for its condition.*

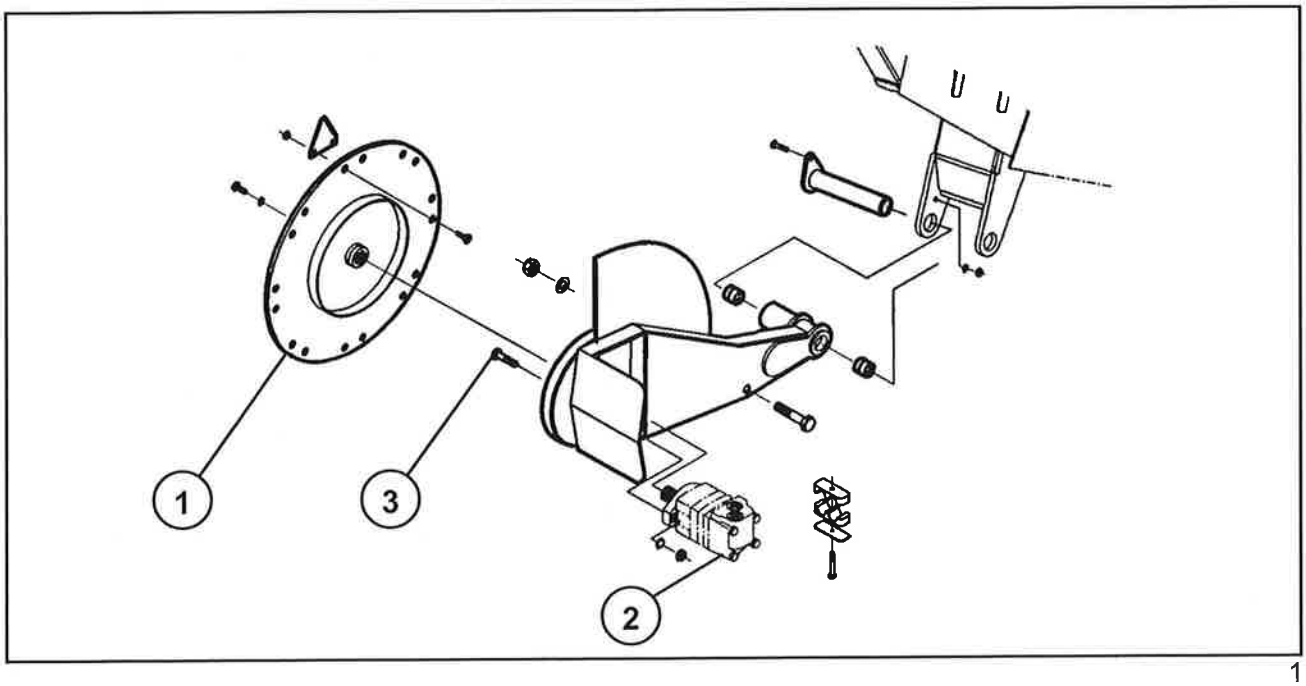

1

1 - Knife
2 - Char-Lynn motor
3 - Bolt

ASSEMBLY

1. Fastening the hydraulic motor

1.1. Place the hydraulic motor on the support.

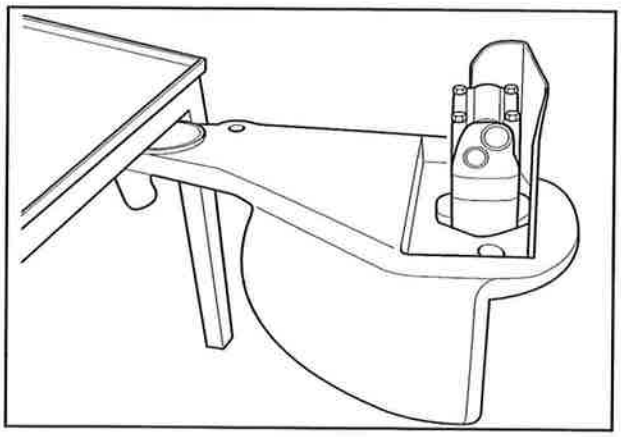

2

1.2. To fasten the motor, use the bolts, lock washers and nuts.

NOTE: *Apply Loctite 271 on the bolts.*

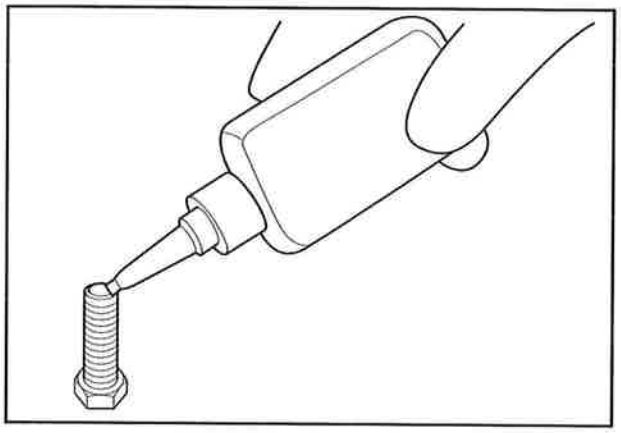

3

NOTE: *Repeat the procedure for the second support.*

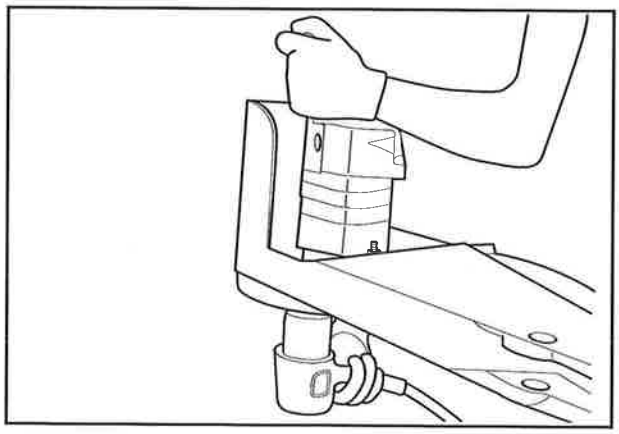

4

3. Assembling the disc

3.1. Prepare some 24-hour Araldite and apply it in the inner spline on the disc.

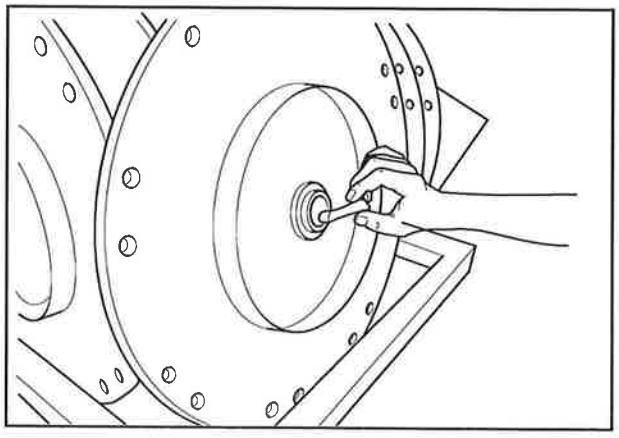

5

3.2. Place the disc on the support, fasten it with the bolt and lock washer.

NOTE: *Apply Loctite 271 on the bolts.*

Repeat all the procedure for the second support.

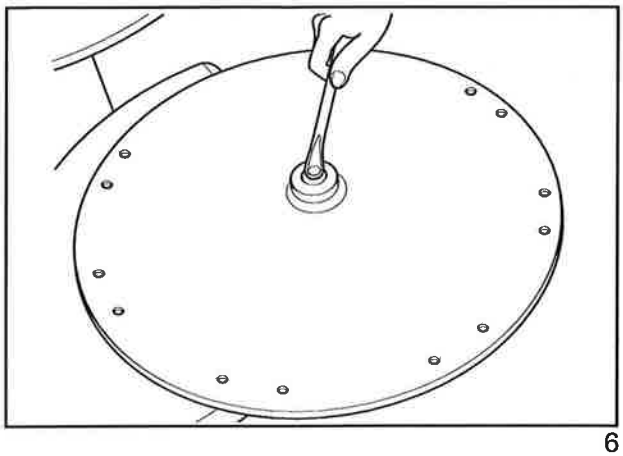

6

45-DEGREE CROP DIVIDERS

DESCRIPTION

The 45-degree crop dividers have a rotating nib at the end of each inner spiral. This point is adjustable for wear and is replaceable.

The rotating nib can also be separated from the spiral and replaced. Because this nib is in contact with the ground, the bottom of the crop divider is subjected to less wear and thus there is no replaceable shoe.

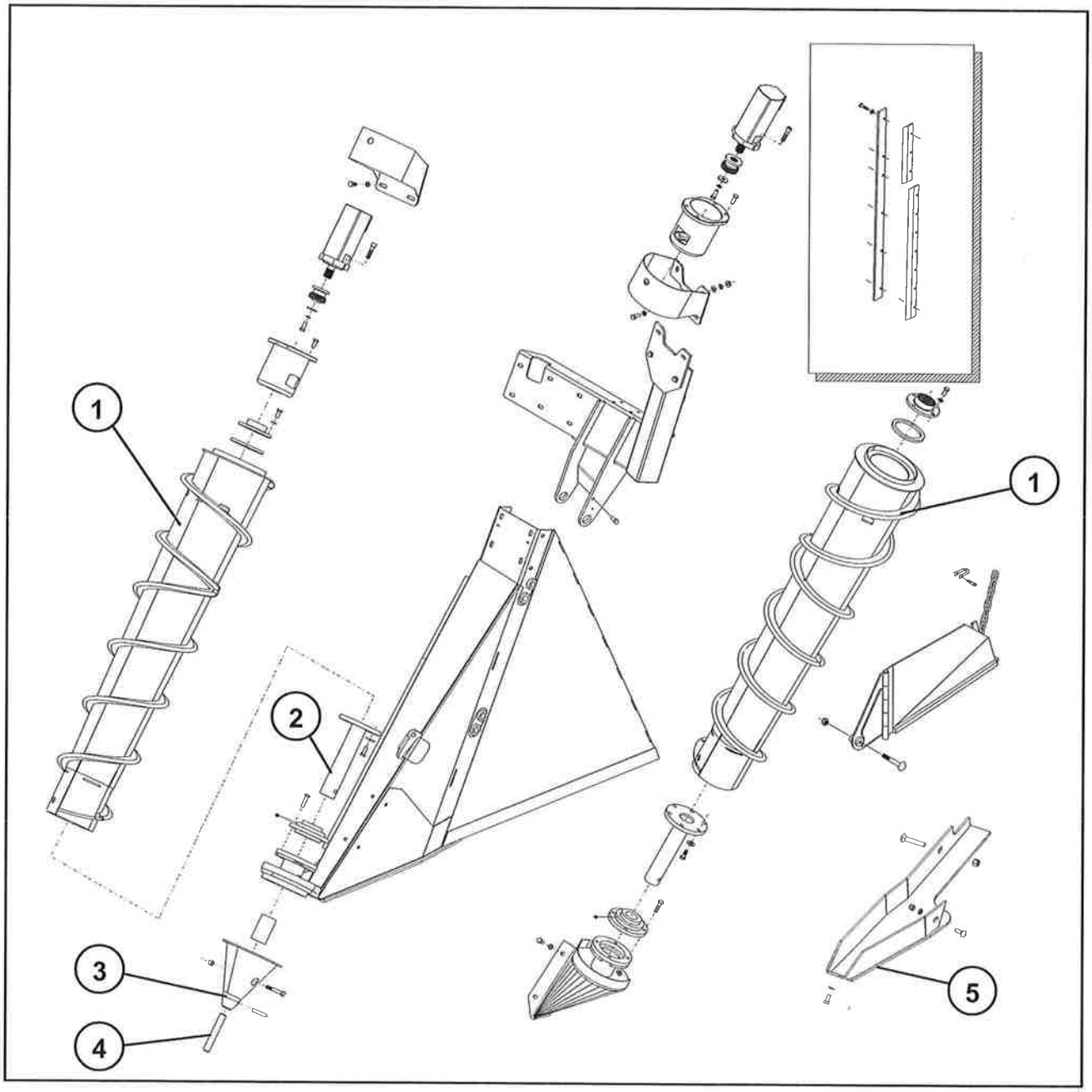

1

1 - Spiral
2 - Replaceable lower shaft
3 - Rotating nib
4 - Replaceable nib
5 - Wear shoe

DISASSEMBLY

1. Remove the hoses from the motor and plug their ends; remove the four bolts fastening the motor assembly to the main frame from the crop dividers and the bolts fastening the pan to the motor assembly; support the crop divider and remove the whole motor assembly.
2. Remove the rotating nib at the end of the inner spiral from the crop divider, removing the bolt. The spiral now can be lifted until there is enough room to remove the lower shaft from the bearing.
3. If necessary, the spiral lower shaft can be unscrewed for replacement.
4. The driving coupling is screwed on the top of the crop divider spiral. The coupling can be removed by removing the four fastening bolts.
5. The male spline is assembled on the motor with Araldite and fastened by only one bolt. To remove it, use the pulley driver.

   NOTE: *It can be necessary use a heat source to break the Araldite apart.*
6. The female splined part is screwed in the upper part of the crop divider.
7. Unscrew the four bolts so that the splined shaft can be removed.
8. The lower bearing is a self-centering sealed unit which can be removed by unscrewing the four mounting bolts.
9. If the bearing housing is damaged or if the bearing is worn, replace it for a new one.
10. Check the splines on the shaft for adjustment condition.
11. If there is leaking from motor seal, it must be replaced by a new one and adjusted.

CAUTION DURING DISASSEMBLY

- *Check the bearings condition and replace them as necessary.*
- *Check the crop dividers for their condition and if necessary, replace the spiral and the lower part.*

ASSEMBLY

2. Assembling the frame attachments for the 45-degree crop divider

2.1. Assembling the two supports on the crop divider frame. Use bolts and lock washers to assemble them.

NOTE: *Thread the bolts until they just touch the part.*

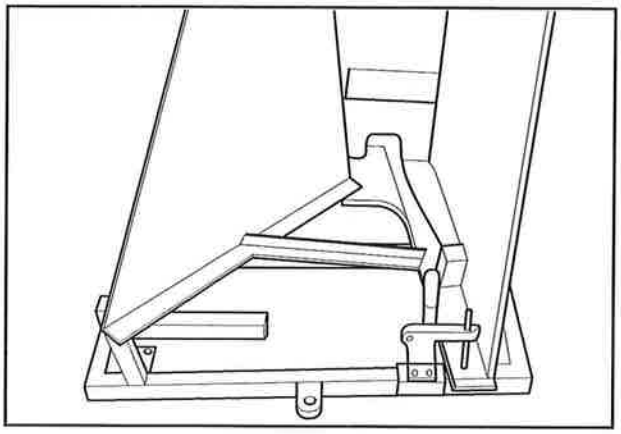

2

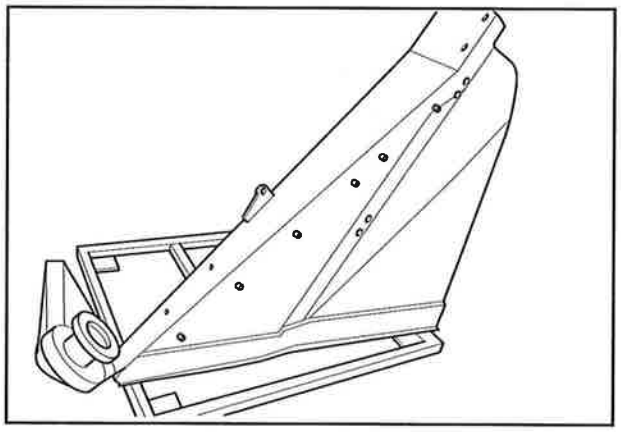

3

2.2. Assembling of a lower support, right side (1) and 01 lower support, left side. For internal and external fastening of both supports, use bolts (apply Loctite 262), plain washers and lock washers.

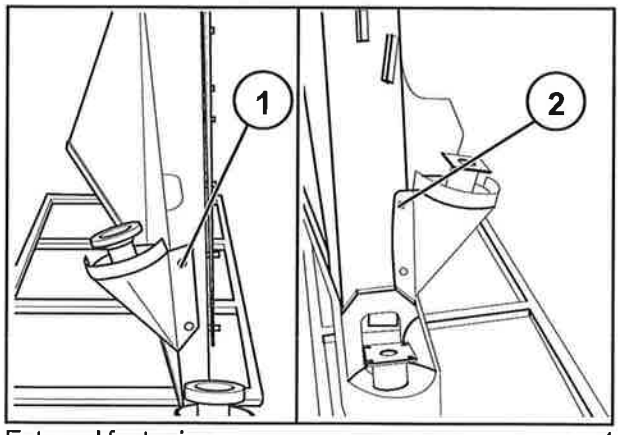

External fastening 4

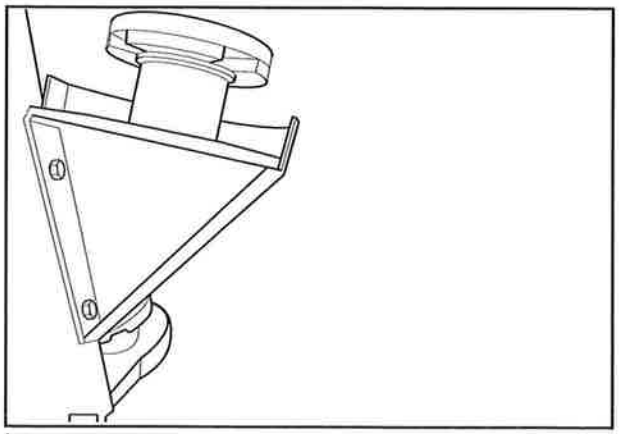

Internal fastening 5

2.3. Assembling of the lower eye ring (one right divider and one left divider); install it with the eye facing up. To fasten them, use bolts and lock washers.

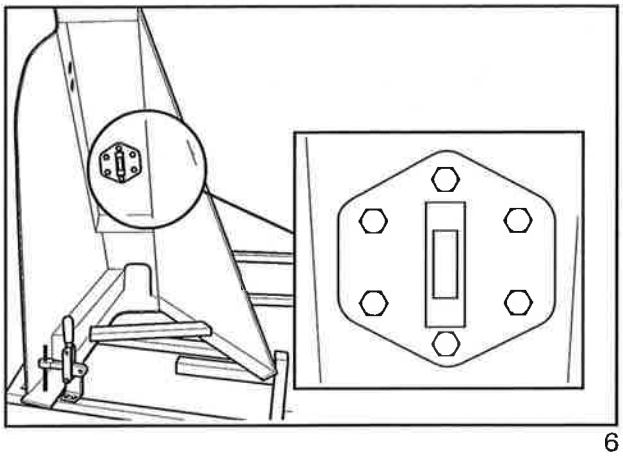

6

2.4. To fasten left side and right side arms, use the bolts, plain washers, lock washer and nuts. Apply Loctite 262 on the bolts.

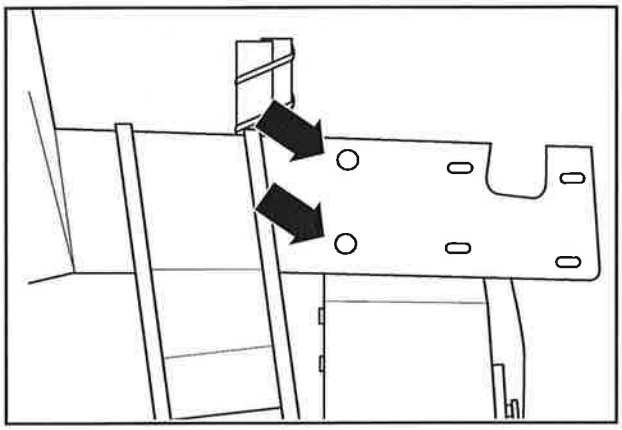

External fastening 7

2.5. When the machine setting requires side trim knife, install the protection over the arms in both sides (1).

With each protection it must be installed the support (2), fastening it with 02 bolts, 02 plain washers, 02 lock washers, and then installed on the support 01 clamp with the plate and fasten them with 01 bolt, 01 plain washer, 01 nut. Tighten the support with an impact wrench, an extension, and a 17 mm socket.

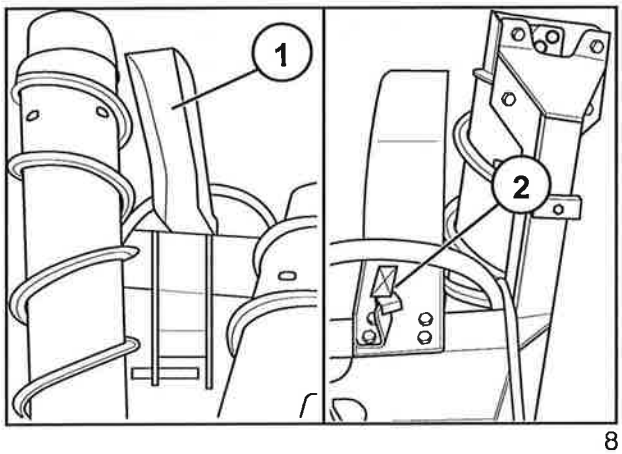

8

3. Pre-assembly and assembly of the divider bearing housing

3.1. Remove the Allen bolt from the bearing.

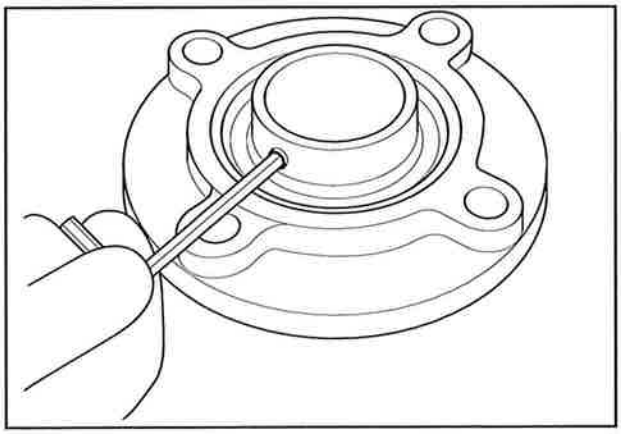

9

3.2. Install a grease fitting.

NOTE: *Use two bearings for each divider (Left Side/Right side), with a total of four bearings and four grease fittings.*

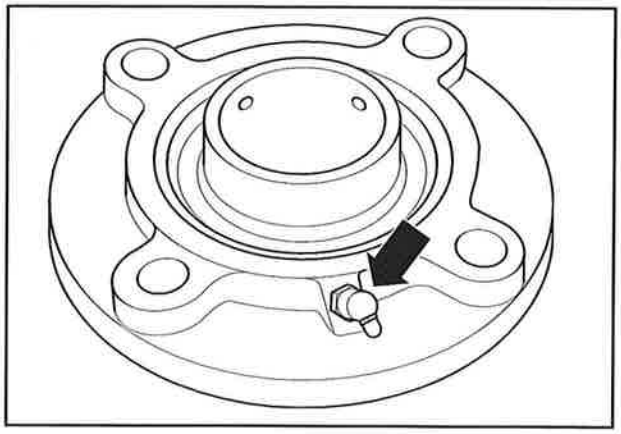

10

3.3. After completing the bearings pre-assembly, install them on the dividers, fastening them with bolts (apply Loctite 262), plain washers, lock washers and nuts for each bearing.

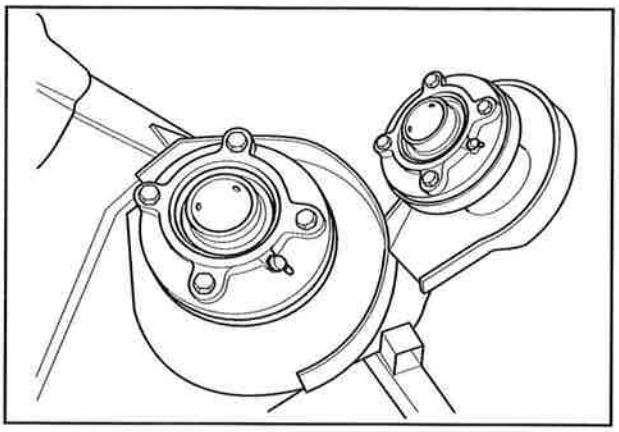

11

3.4. After assembling the bearing, apply anti-seize 767 lubricant (1) and grease (2).

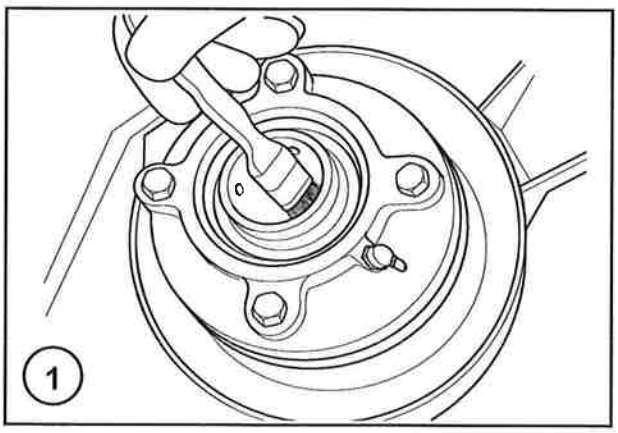

12

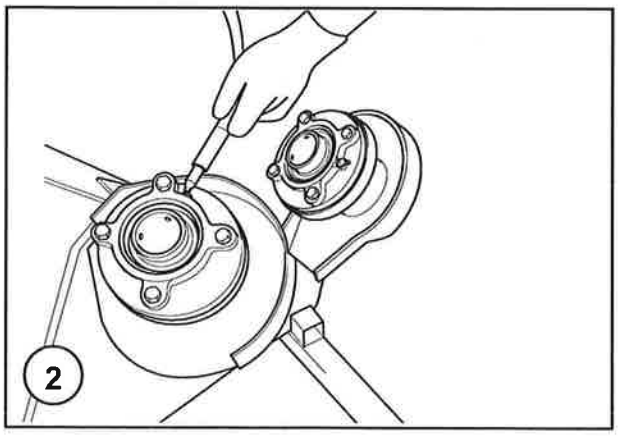

13

4. Crop dividers pre-assembly

4.1. Install the adapter (1) on the top of the crop divider, observing its correct fitting position.

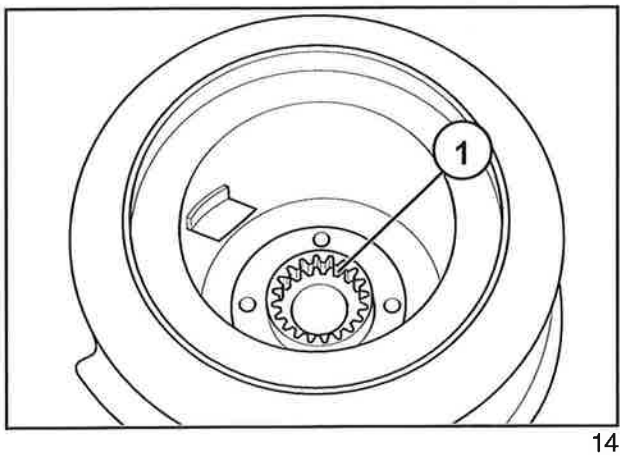

14

To fasten the adapter, use bolts with Loctite 271 applied and lock washers.

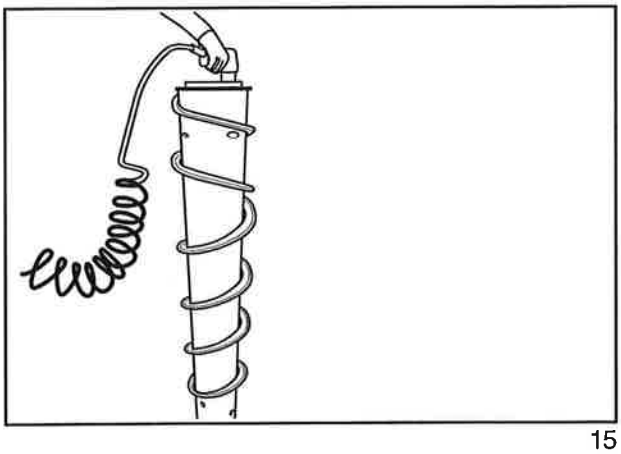

15

4.2. Install the crop divider point (1) on the lower part of the crop divider, observing its correct fitting position.

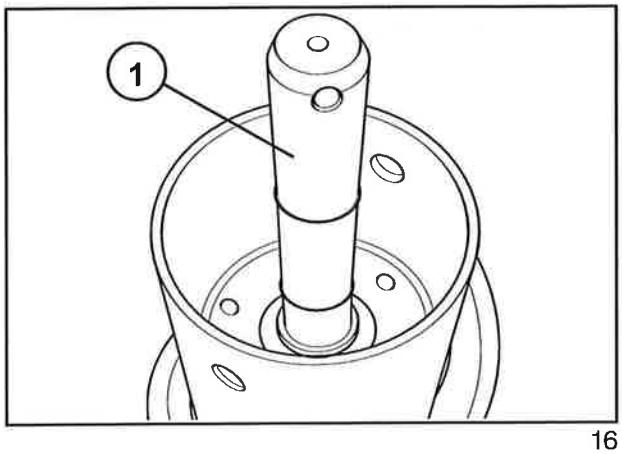

16

To fasten the adapter, use 06 bolts with Loctite 271 applied and 06 lock washers. For tightening, use the impact wrench with the extension and a 19 mm socket.

NOTE: *Repeat the procedure for all 04 assemblies.*

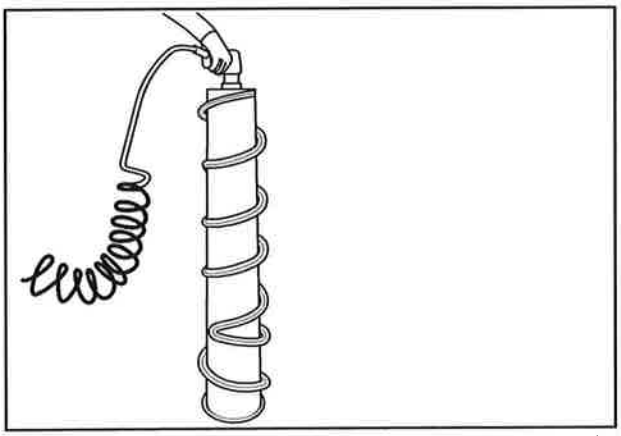

17

5. Crop dividers assembly

5.1. Install the ring (1) and then the housing /support assembly (2).

NOTE: *On each divider frame (left side/right side) two crop dividers will be installed: one on the point and the other on the lower side support.*

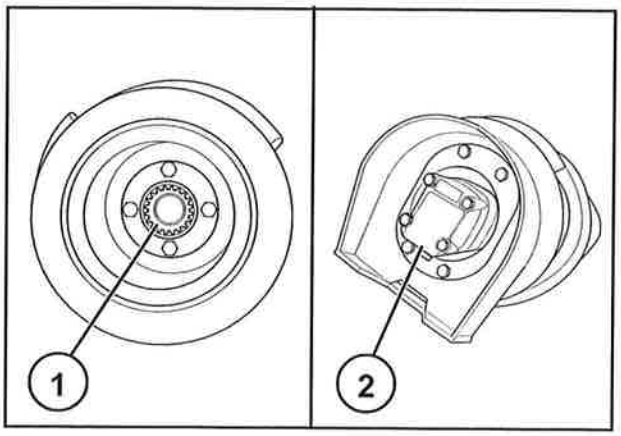

18

5.2. After installing the housing / support, install the first crop divider on the divider frame point. To fasten the crop divider, use the bolts, plain washers, lock washers and nuts. Apply Loctite 262 on the bolts.

NOTE: *Check the right position of the bolts (2) to fasten the crop divider.*

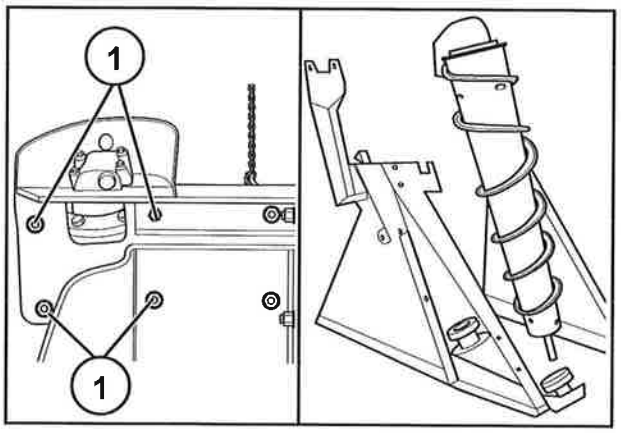

19

6. Assembling the points

6.1. On the crop divider's shaft, install a spacer (1) and install the point (2) on it, fastening it with the bolt and nut (3).

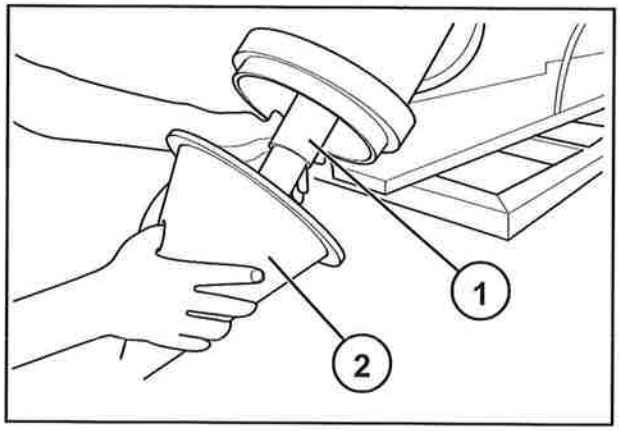

20

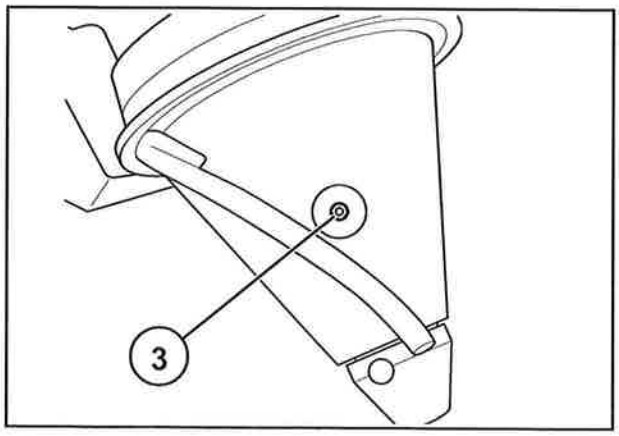

21

6.2. Install a lock pin (1) on the point.

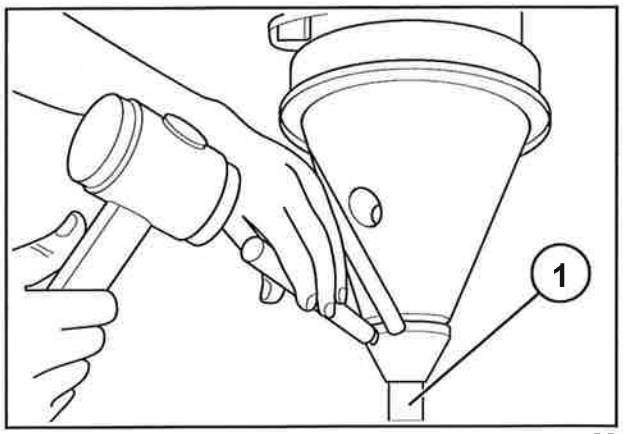

22

After locking, tighten the bolt installed on the previous step.

6.3. Repeat the procedure for the 2nd crop divider but use the left side point.

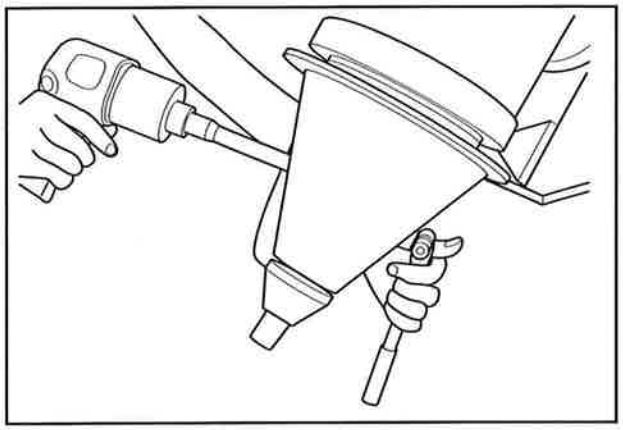

23

7. Side trim knife assembly

7.1. When the machine configuration requires a side trim knife, fasten 01 hydraulic cylinder on the crop divider frame.

To fasten each cylinder, use the pins, plain washers and cotter pins.

NOTE: *The figure shows a HYDRAULIC adjustment cylinder, although a MECHANICAL adjustment cylinder can also be required, as indicated in figure on the right side.*

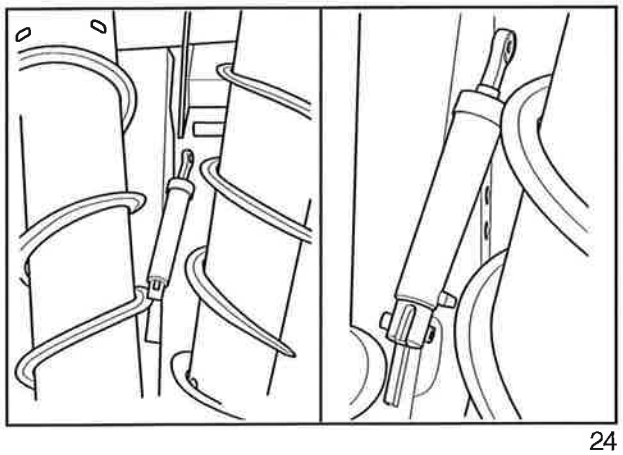

24

To fasten the cylinder with mechanical adjustment, use pins, plain washers and cotter pins.

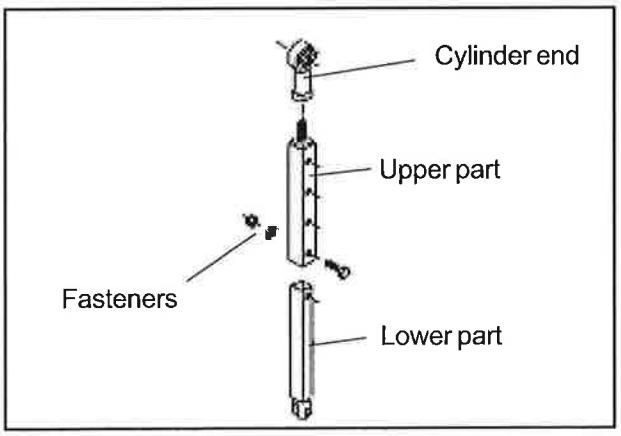

25

7.2. Install the **previously assembled** side trim knife on the crop divider arm, fastening it with a pin. Install the side cylinder on the side trim knife arm.

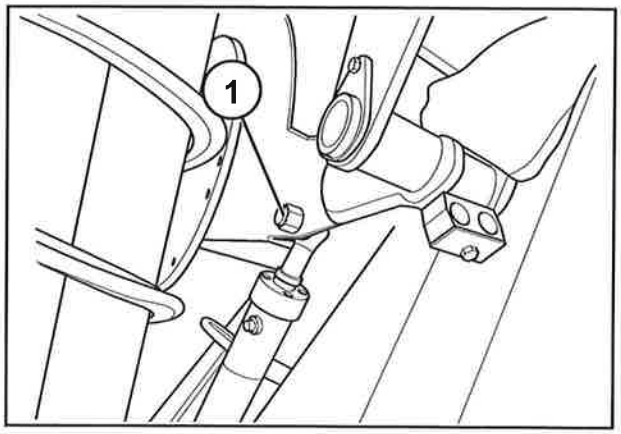

26

Trim knife adjustment

Align the side trim knife with the crop divider's spiral to set a 15 mm clearance (1).

After installing the trim knife and setting the clearance, assemble the cylinder as shown in the figure.

NOTE: *Set the clearance for both dividers, on the right side and left side.*

NOTE: *The 15 mm clearance setting is indicated in the cylinder (2).*

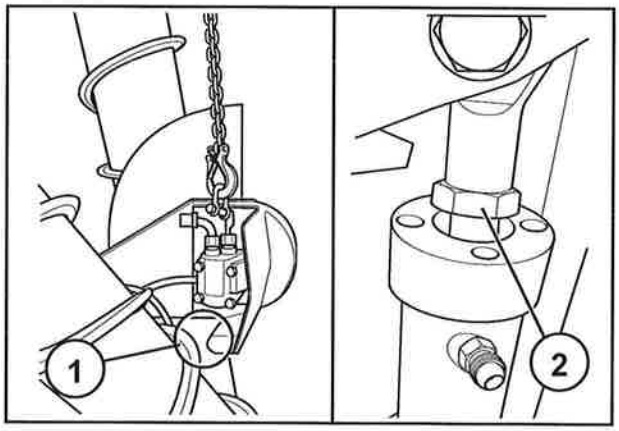

27

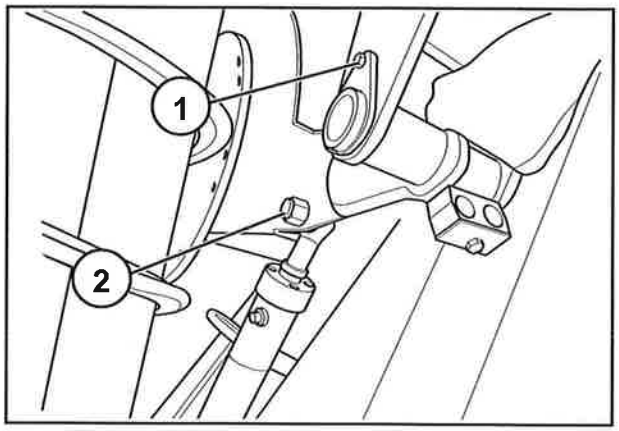

28

CROP DIVIDER TRAYS

DESCRIPTION

In machines equipped with raising hydraulic adjustment for crop dividers (optional), the upper tray is assembled in two parts; so, its position can be changed by the hydraulic cylinder.

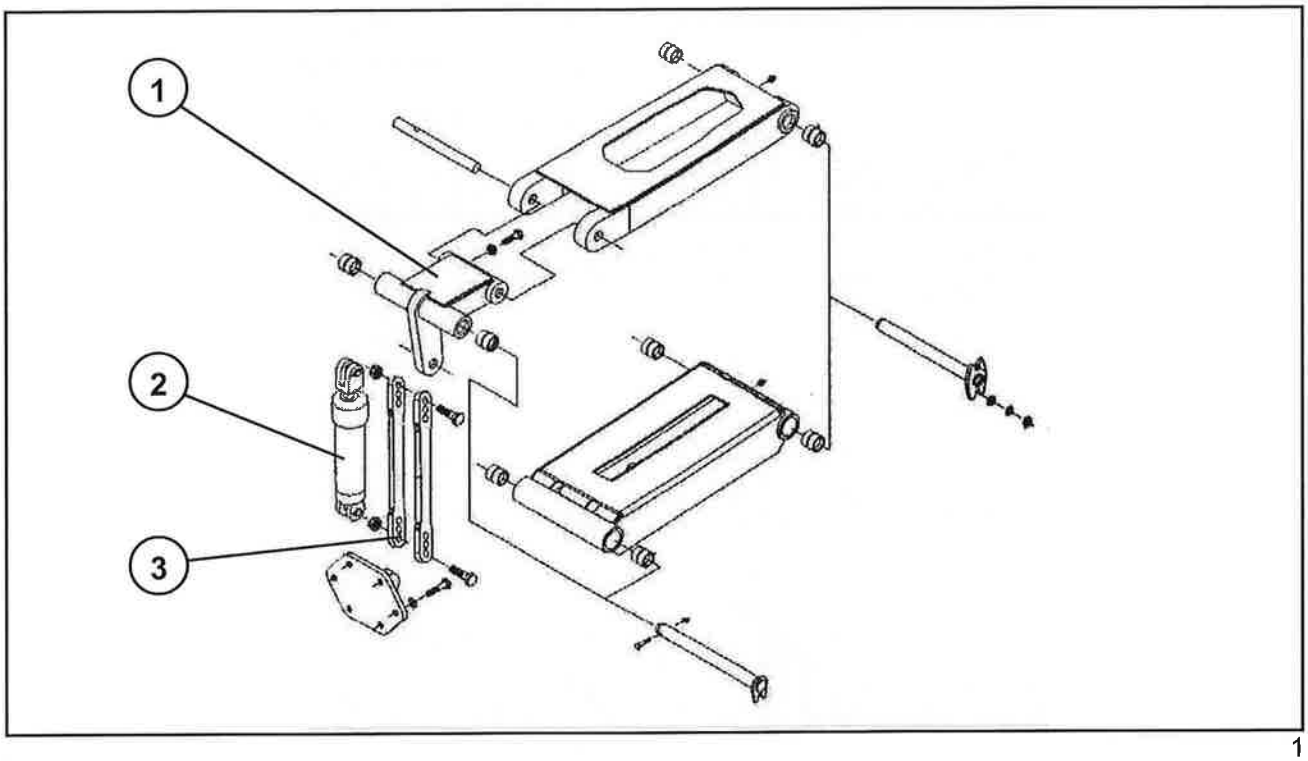

1

1 - Tray attachment

2 - Hydraulic Cylinder

3 - Manual adjustment

DISASSEMBLY

1. To remove the trays, first remove the hydraulic cylinder (if equipped) by pulling out the pins.
2. Remove the pin retaining bolts from the trays pivots in the main chassis and remove the pins.
3. The trays are free from the harvester and from the crop dividers.
4. Check the bushes and pins in the trays for wear and cracks and replace or repair them as necessary.

ASSEMBLY

The assembly is performed in reversal order of disassembly.

CAUTION DURING DISASSEMBLY

- *Check the bushes condition and replace them as necessary.*
- *Check the pins condition and replace them as necessary.*
- *Check the holes condition in the chassis and correct them as necessary.*

FLOATING SIDE SHOES

DESCRIPTION

Due to different conditions among plantations and culture types, it can be necessary the use of side floating side shoes, which direct the cane to the base cutter.

The floating side shoes are fastened on the crop dividers by a 20 mm bolt and supported by an adjustable chain on the rear.

REMOVAL

1. Lower the machine to the ground, disconnect the supporting chain and remove the bolt.
2. Lift the machine until the main frame releases the floating side shoe and remove it.

CAUTION DURING DISASSEMBLY

- *Check the plates for the wear condition.*

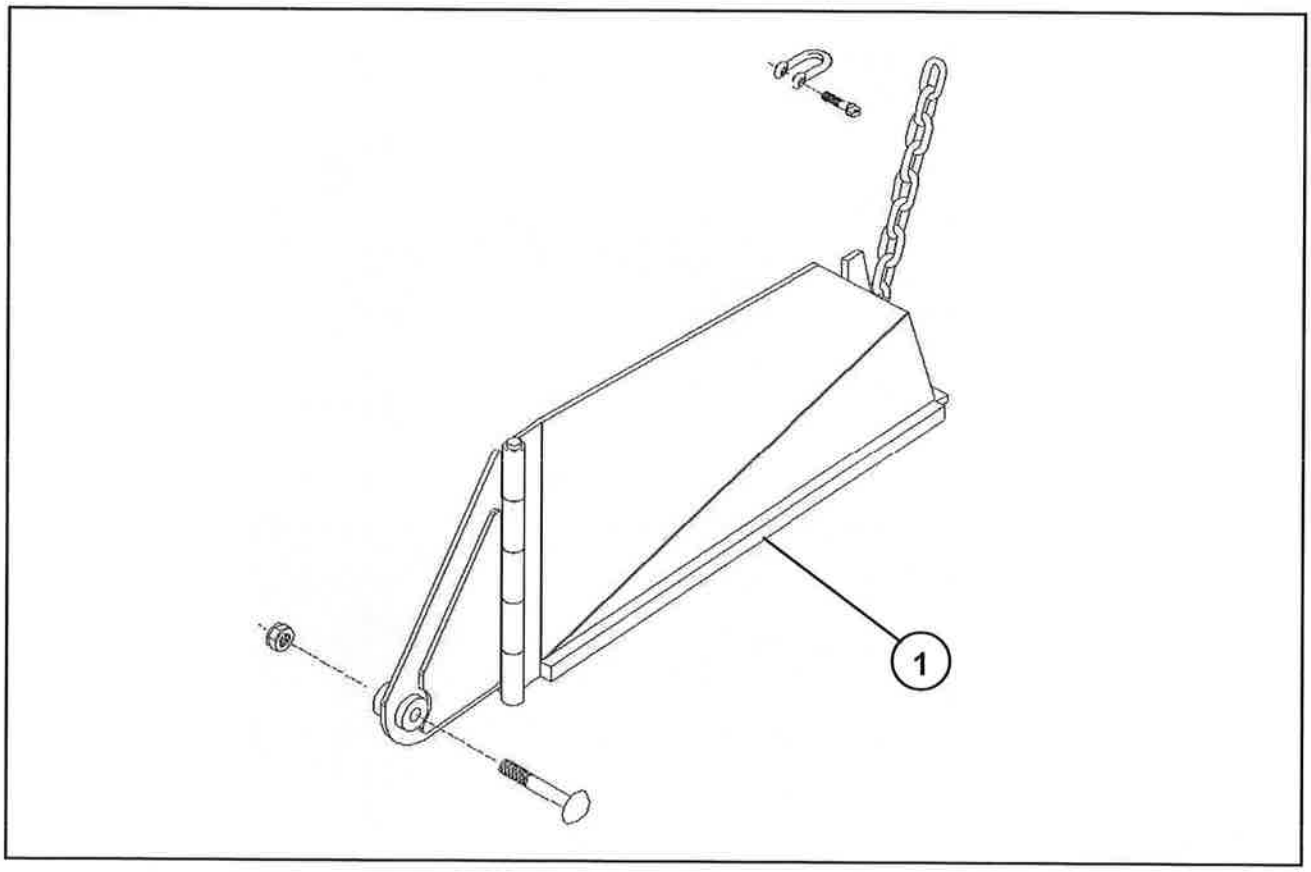

1

1 - Float side shoe

KNOCKDOWN ROLLER WITH HYDRAULIC ADJUSTMENT

DESCRIPTION

The knockdown roller helps the feeding of large amounts of recumbent cane into the machine.

Hydraulic Adjustment (Standard)

The feeding assembly is located on the machine entry and it is hydraulically adjusted by one pin located below the topper lift cylinder.

CAUTION DURING DISASSEMBLY

- *Check the hub bearings condition and replace them as necessary.*
- *Check the Char-Lynn motors attachments and replace them as necessary.*
- *Check the slats for wear and replace them as necessary.*

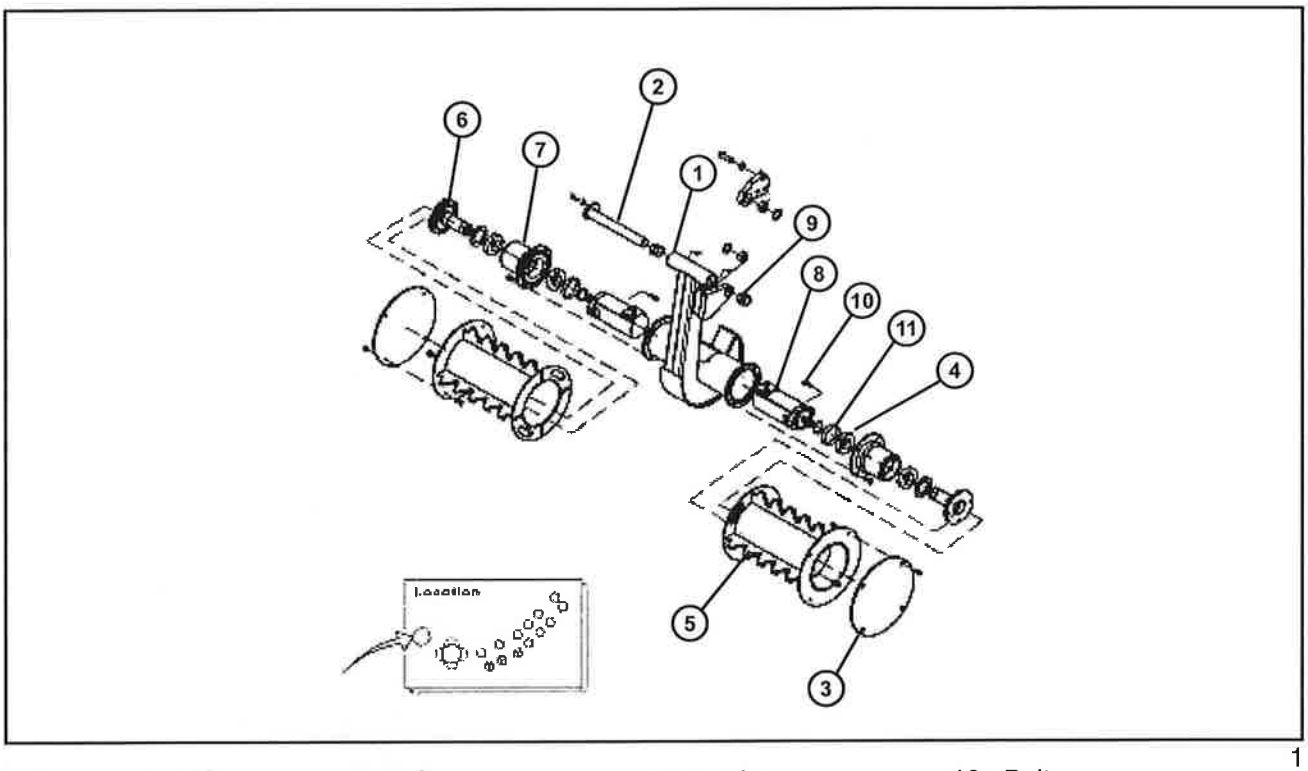

1

1 - Drum assembly
2 - Pivot pin
3 - Cover
4 - Bolt
5 - Roller
6 - Flange
7 - Bearing
8 - Hydraulic motor
9 - Bolt
10 - Bolt
11 - Snap ring

DISASSEMBLY

1. Support the drum assembly (1) in safety jacks or lift the machine with a rolling bridge.
2. Remove the pin from the lift cylinder assembly and remove the roller assembly.
3. Disconnect the hoses from the hydraulic motor and plug the hoses and the holes in the motor.
4. Remove the pivot pin (2) and the roller assembly from the machine.
5. Remove the covers (3), loose the bolts (4) fastening the roller (5) to the driving flanges (6) and separate the rolls.
6. Remove the driving flanges (7) from the motors (8), removing the central mounting bolts (9); apply heat on the flanges to "break apart" the Loctite.
7. Remove the bolts (10) and remove the drive motors (8) from the bearing housing.
8. Remove the snap ring (11) and the shaft (6) from the bearing (7).
9. Remove all bearing and sealing, and replace them as necessary.

The motors are from Char-Lynn 2000 series.

Perform the repairs for the motor assembly, according to the instructions on Chapter 4 – Hydraulic Components Repair, Maintenance and Timing for Char-Lynn Motor.

NOTE: *During the disassembly, check if the left side motor is set to turn counterclockwise and the motor on the right side to turn clockwise.*

1. Assembling the hydraulic knockdown roller on the chassis

1.1. Install the grease nipples.

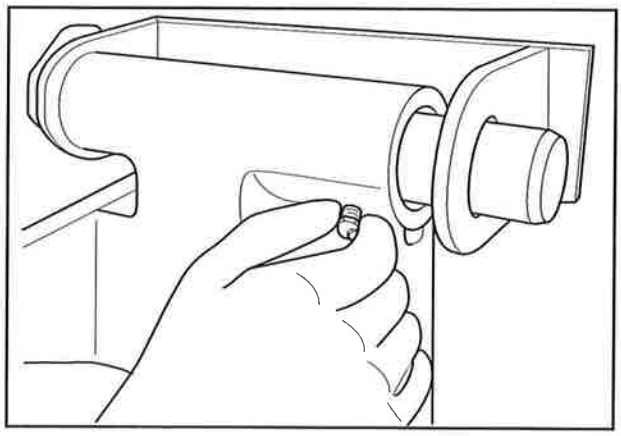

2

1.2. Install the bush with the eye bracket in the roller fastening frame. To make the assembling easier, use anti-seize.

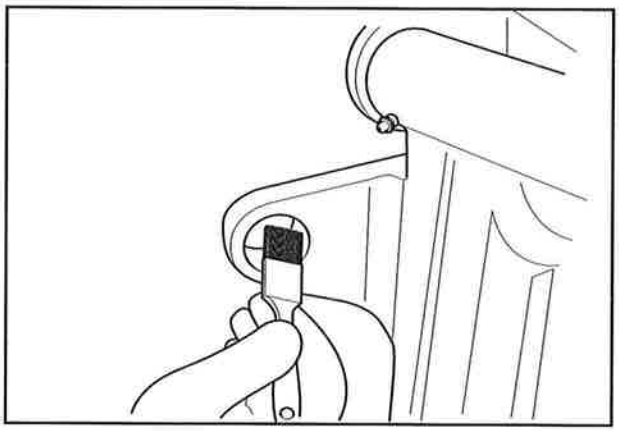

3

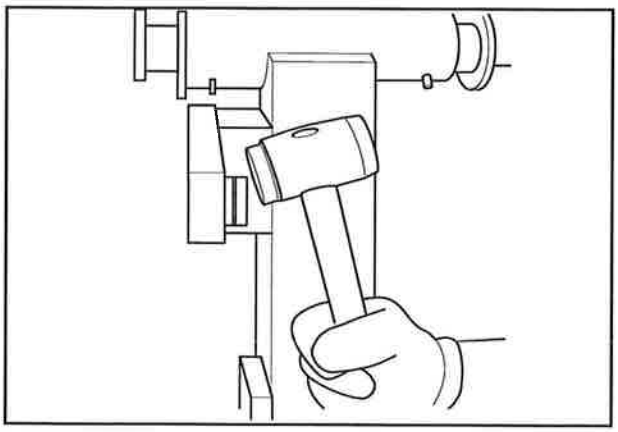

4

1.3. Install a snap ring to lock it.

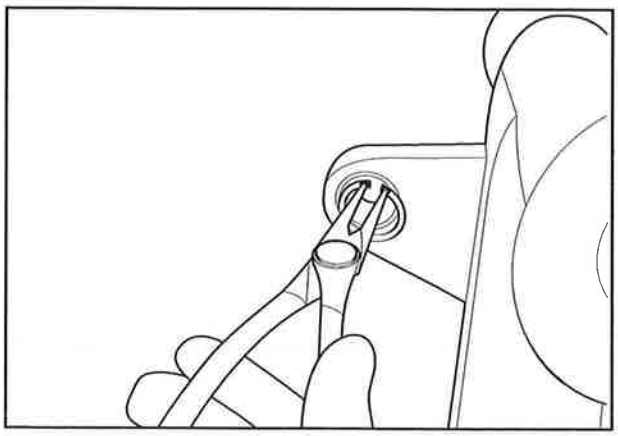

5

2. Assembling the motor assembly

2.1. Clean the roller drum camshafts.

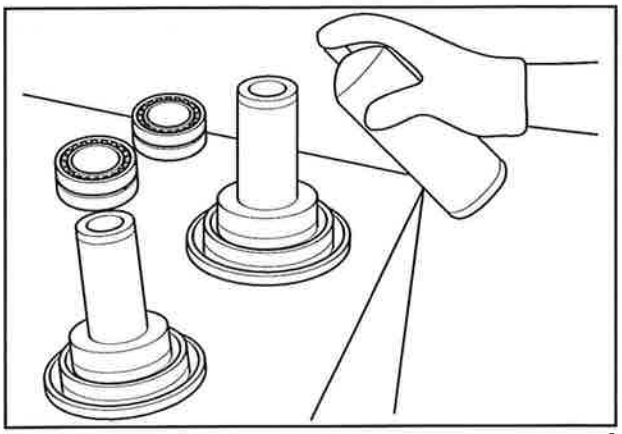

6

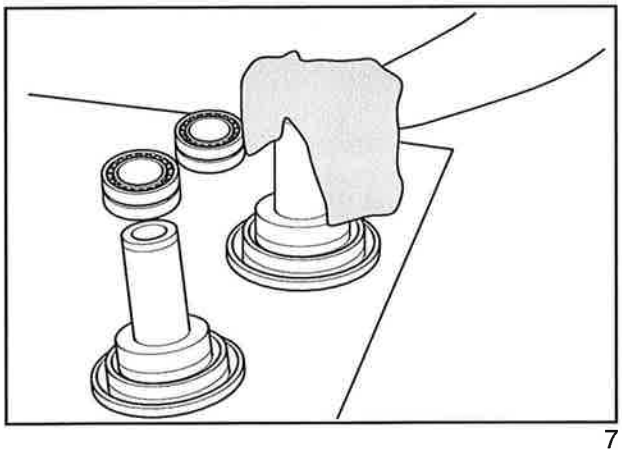

7

2.2. Install the seal on the camshaft.

NOTE: *See the details about the correct position to install the seal.*

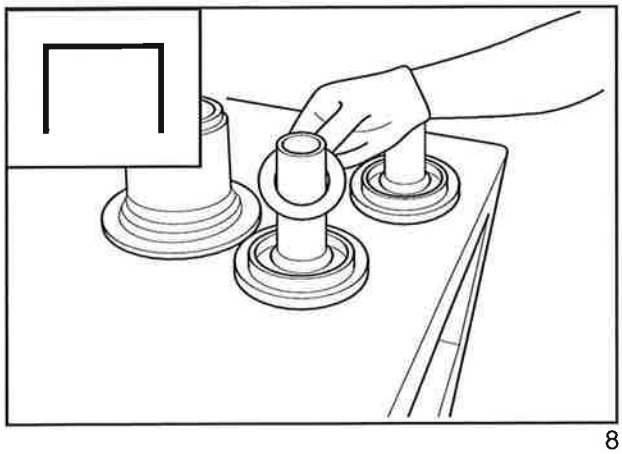

8

2.3. Apply grease on the bearings in the face that will be in contact with the seal.

NOTE: *Use a driver to install the bearing until it seats on the seal.*

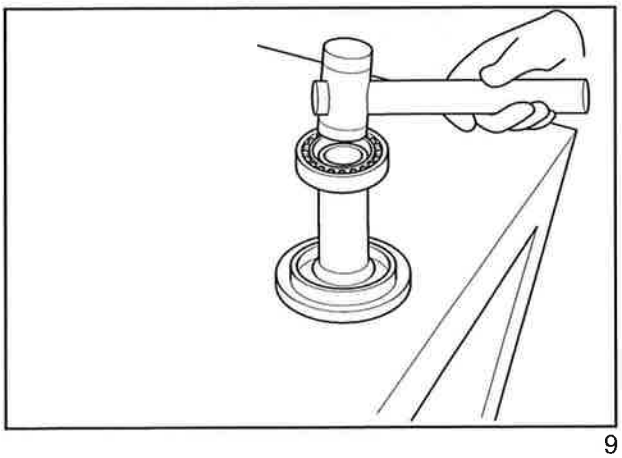

9

2.4. After the bearing seats on the seal, apply more grease on the bearing.

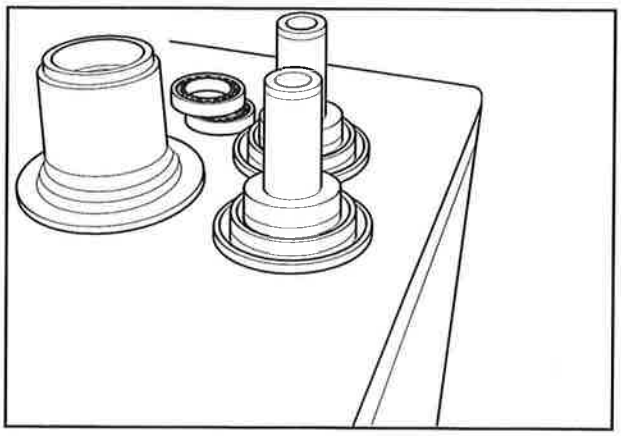

10

2.5. Assemble the camshaft in the housing.

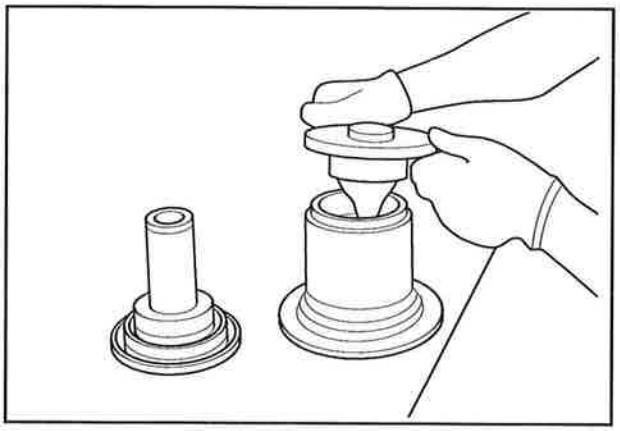

11

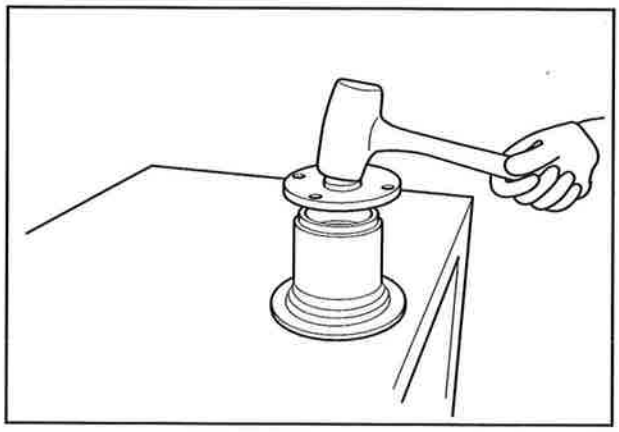

12

2.6. Install the hydraulic motor in the housing, fastening it with bolts.

NOTE: *Use Loctite 262 on the bolts.*

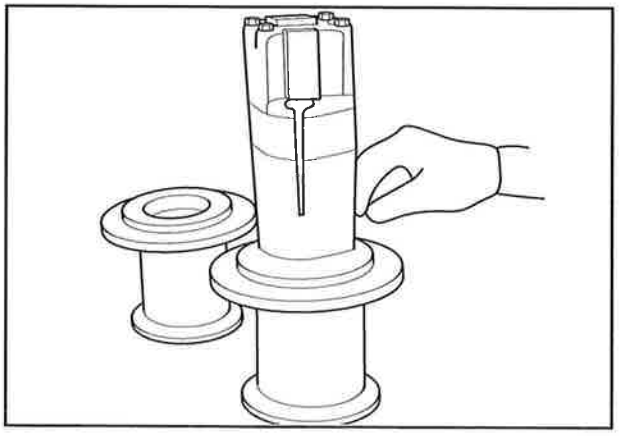

13

3. Knockdown roller assembly

3.1. Install the motor assembly on the knockdown roller frame and fasten it with bolts.

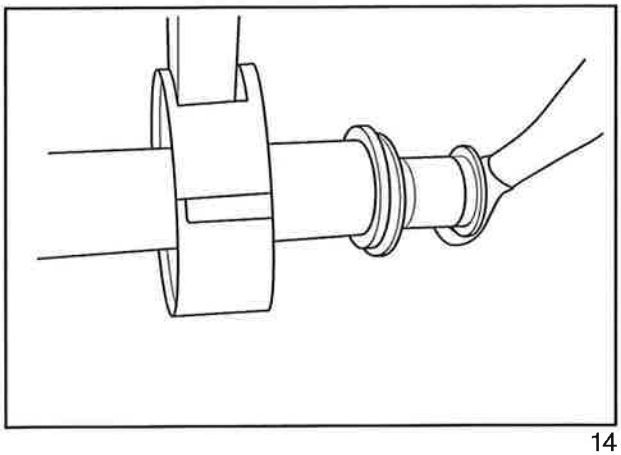

14

3.2. Install the hose fittings on the hydraulic motor.

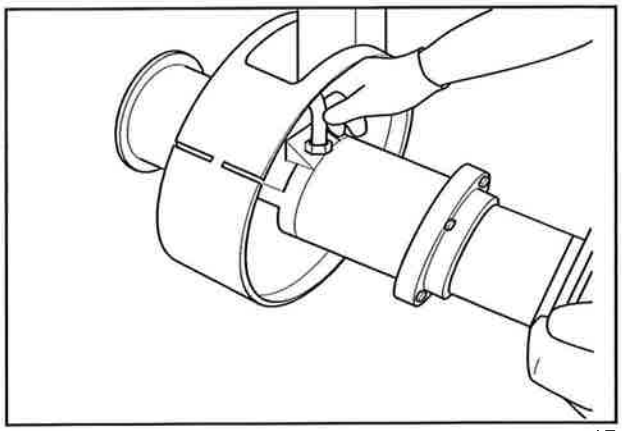

15

3.3. Install the roller on the frame and fasten it with bolts.

NOTE: *When tightening the bolts, pay attention to the roller alignment.*

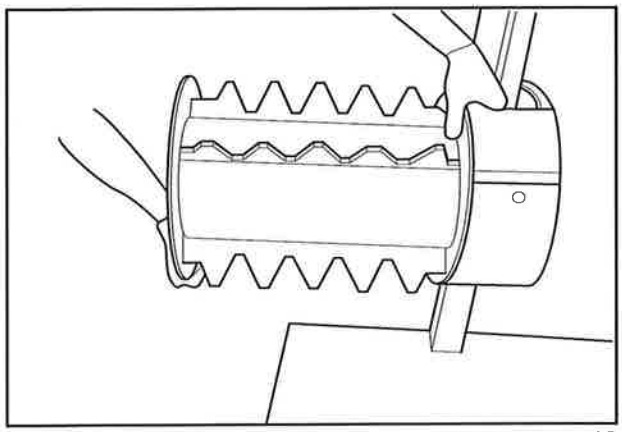

16

3.4. Fasten the cover.

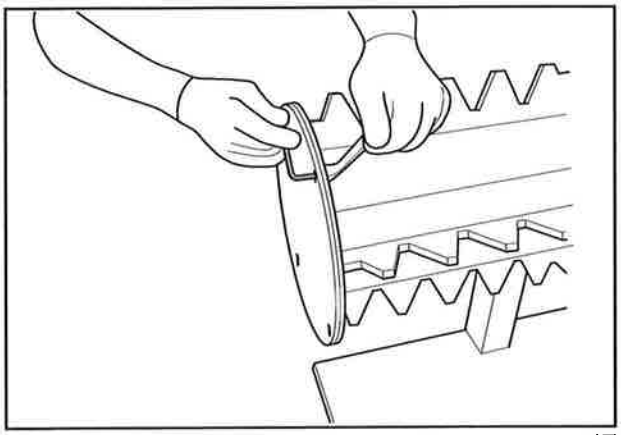

17

FINNED ROLLER

DESCRIPTION

The function of the roller feed train is to make sure that the cane, after the cutting, is transported to the chopper.

CAUTION DURING DISASSEMBLY

- *Check the slats for wear and replace them as necessary.*
- *Check the bearings and replace them as necessary.*
- *Check stops condition and replace them as necessary.*
- *Check the machine chassis for cracks.*

DISASSEMBLY

1. Support the roller (1), disconnect and plug the hydraulic hoses.
2. Remove the three bolts (2) fastening each side of the shoes inner part, removing the side parts (3);
3. Remove the eight nuts (4) fastening the hydraulic motors housing (5) on the right and left sides.
4. Remove the base motors assembly (5) to allow the removal of the roller from the machine.

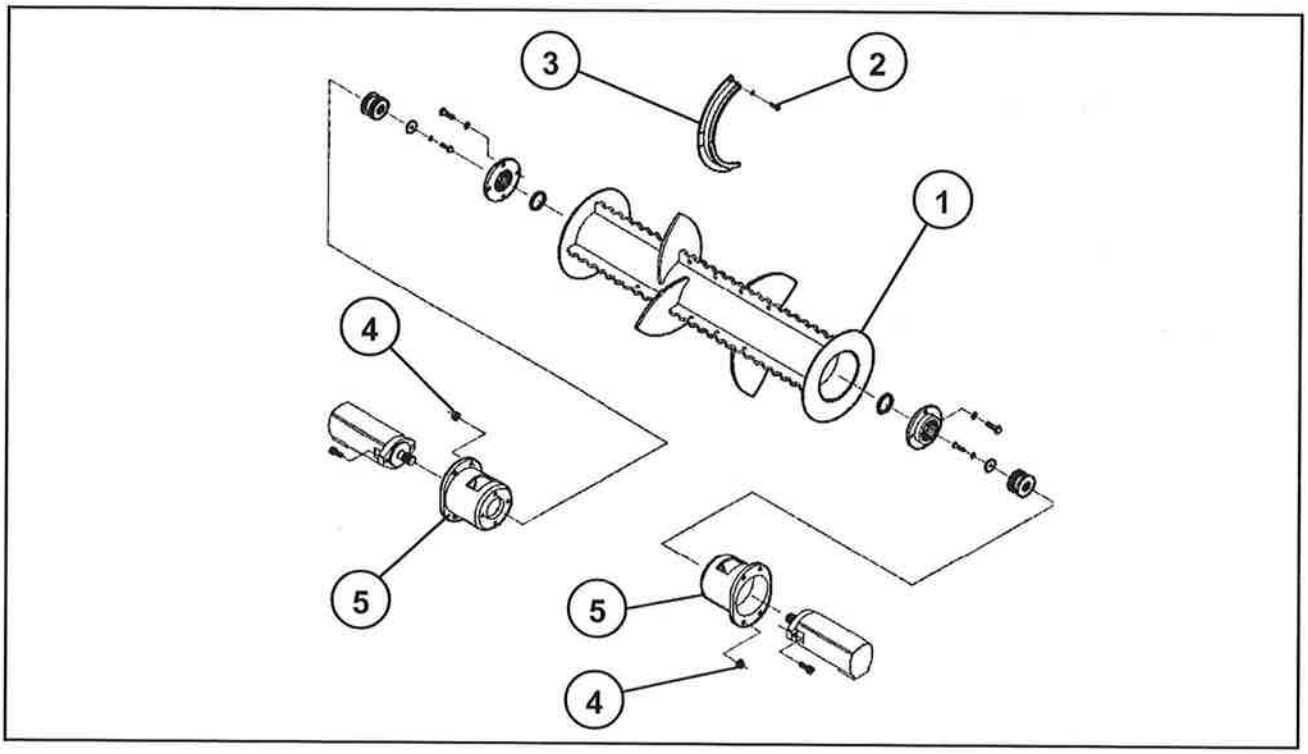

1

1 - Roller
2 - Bolt
3 - Side shoes parts
4 - Nut
5 - Hydraulic motor housing

FEED ROLLER TRAIN

BUTTLIFTER ROLLER

DISASSEMBLY

1. Loose the hydraulic hoses from the two driving motors and plug their ends.
2. Lock the roller (1), remove the fastening bolts (2) from the motor housing (3) and remove the cases and the motor assemblies (4).

The motors must be removed from their cases as described on the lower rollers disassembly procedure.

CAUTION DURING DISASSEMBLY

- *Check the slats for wear and replace them as necessary.*
- *Check the bearings and replace them as necessary.*
- *Check stops condition and replace them as necessary.*
- *Check the roller cradles for wear and replace them as necessary.*
- *Check the machine chassis for cracks.*

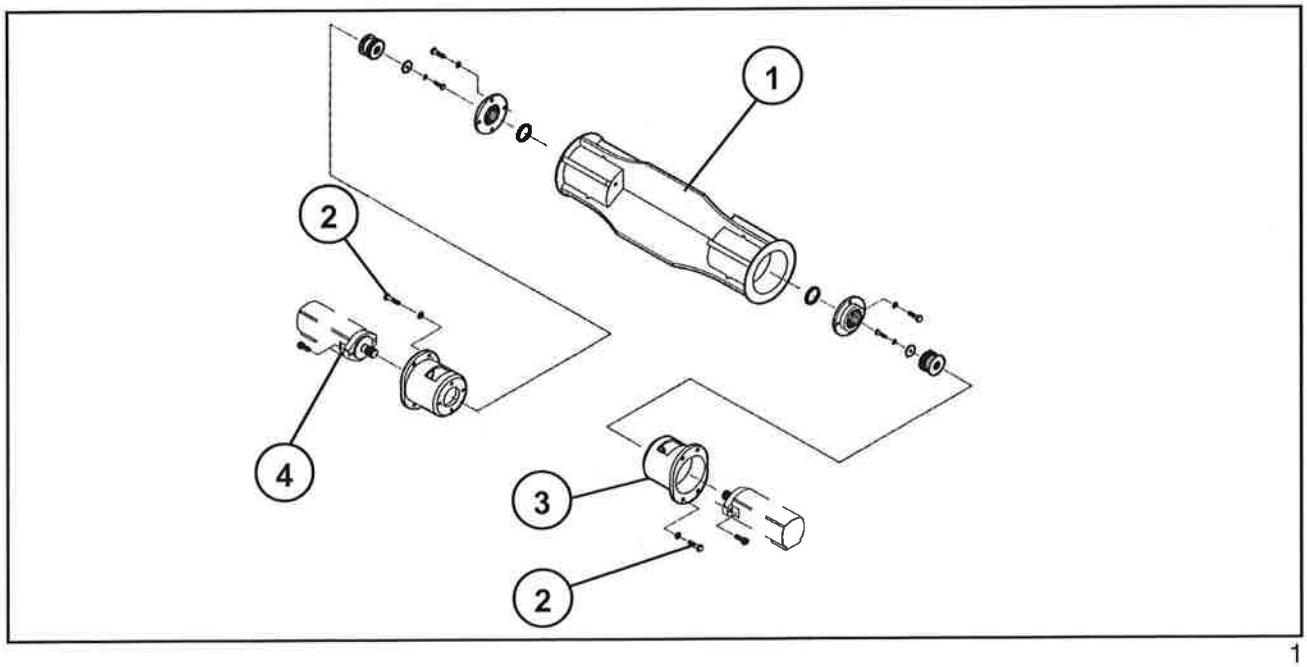

1

1 - Roller
2 - Bolt
3 - Hdraulic motor housing
4 - Hydraulic motor

LOWER ROLLERS (DUAL DRIVE)

REMOVAL

1. Remove the hydraulic hoses and plug their ends.
2. Loose the four bolts fastening the motor housing (1).
3. Support the roller (2) and remove the two drive motors (3).
4. The roller can now be lowered to the ground.

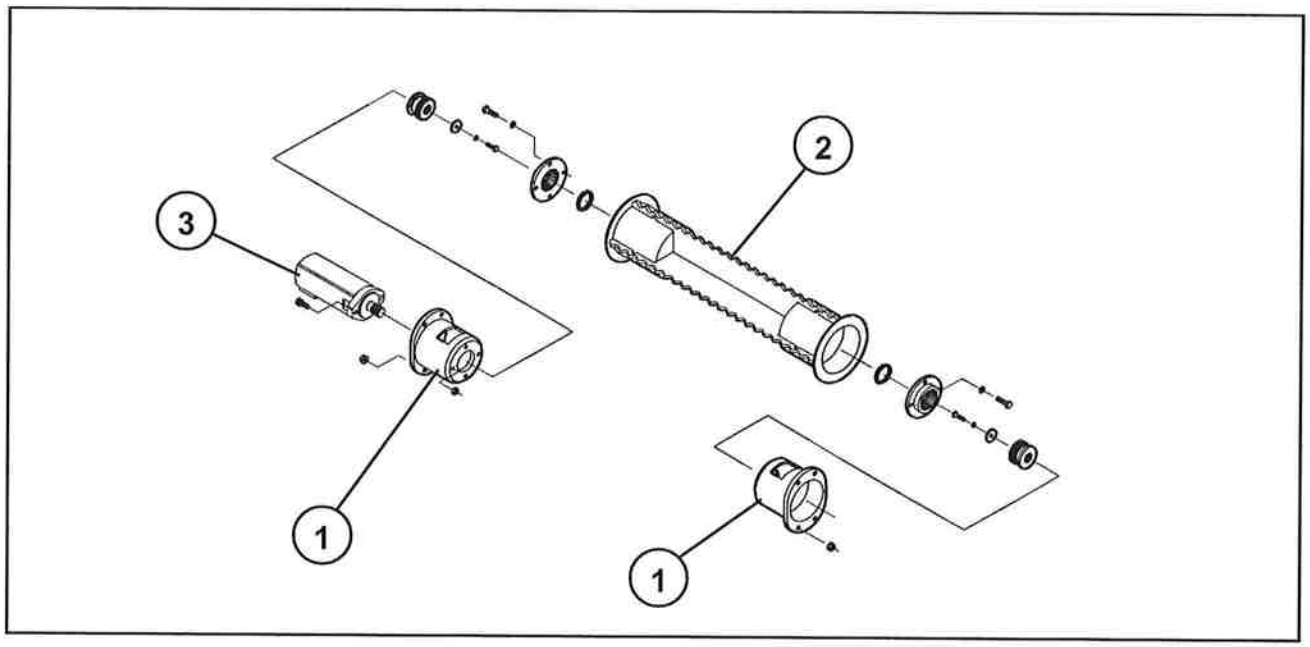

1

1 - Hydraulic motor housing
2 - Roller
3 - Hydraulic motor

LOWER ROLLERS (SINGLE DRIVE)

DISASSEMBLY

1. Remove the hydraulic hoses and plug their ends.
2. Remove the four nuts (1) fastening the motor housing (2) to the machine chassis.
3. Pull out the motor housing (2) until releasing the pinion (3) from the ring gear (4); this way, the roller (5) will be supported on the bearing housing.
4. On the opposite side, remove the three bolts from the bearing housing.
5. Support the roller, remove the last adjusting screw from the motor housing and remove the bearing from the motor (2).
6. This way, the roller will be lifted by the support and can be lowered to the ground.

   NOTE: *Check that the bearing rolls freely with the bearing housing.*

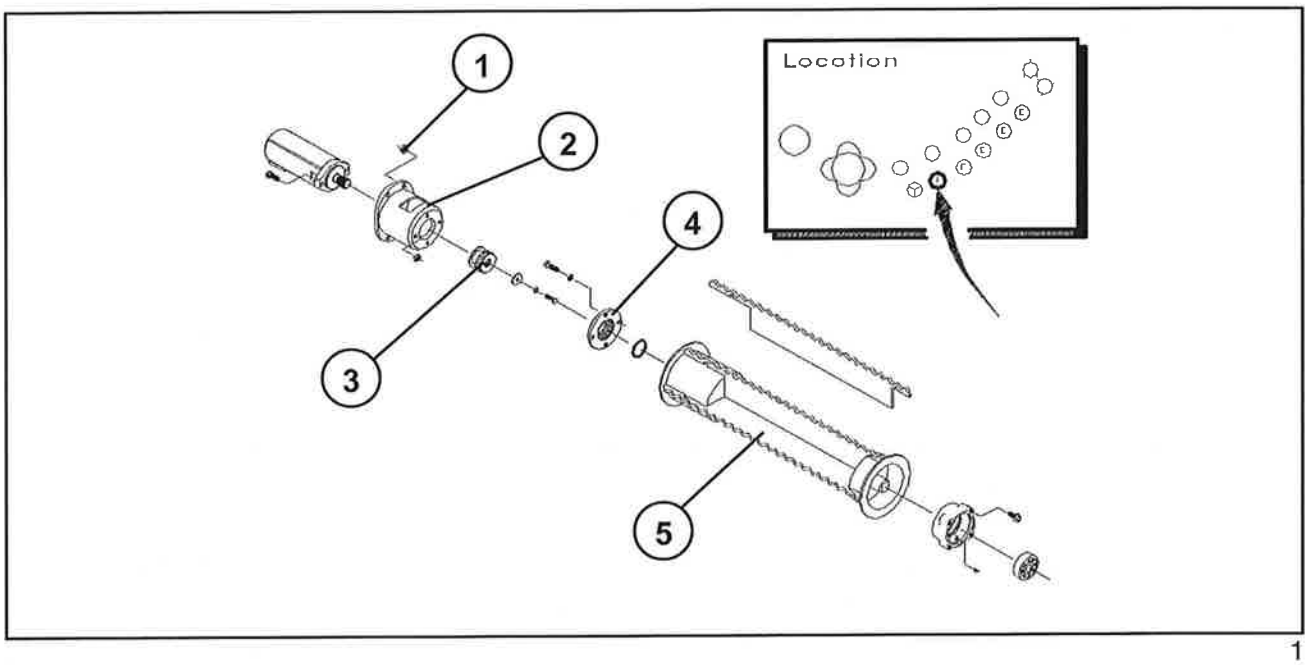

1

1 - Nut
2 - Hydraulic motor housing
3 - Pinion
4 - Ring gear
5 - Roller

UPPER ROLLER

DISASSEMBLY

1. First, remove the appropriate lower roller, as described above.
2. Remove the stops (1, 2, 3).
3. Remove the hydraulic hoses and plug their ends.
4. Loose the four flanged nuts (4) fastening the motor housing (5) to the motor. Support the roller weight (6) and then remove the bearing.
5. Loose the three nuts (7) from the pivot pin flange (8) in each side and, with the roller still supported, remove the two pivot pins.

This will allow the roller to be lowered to the ground through the space created by the appropriate lower roller removal. For the two upper rollers just behind the engine compartment, the removal can be performed from the top.

After removing the assembly from the machine, the roller can be removed from the arm (9) by loosing the four flanged nuts (4) that fasten the bearing housing (10) to the arm (9). Then, the bearing (11) and the bearing housing (10) can be removed from the roller.

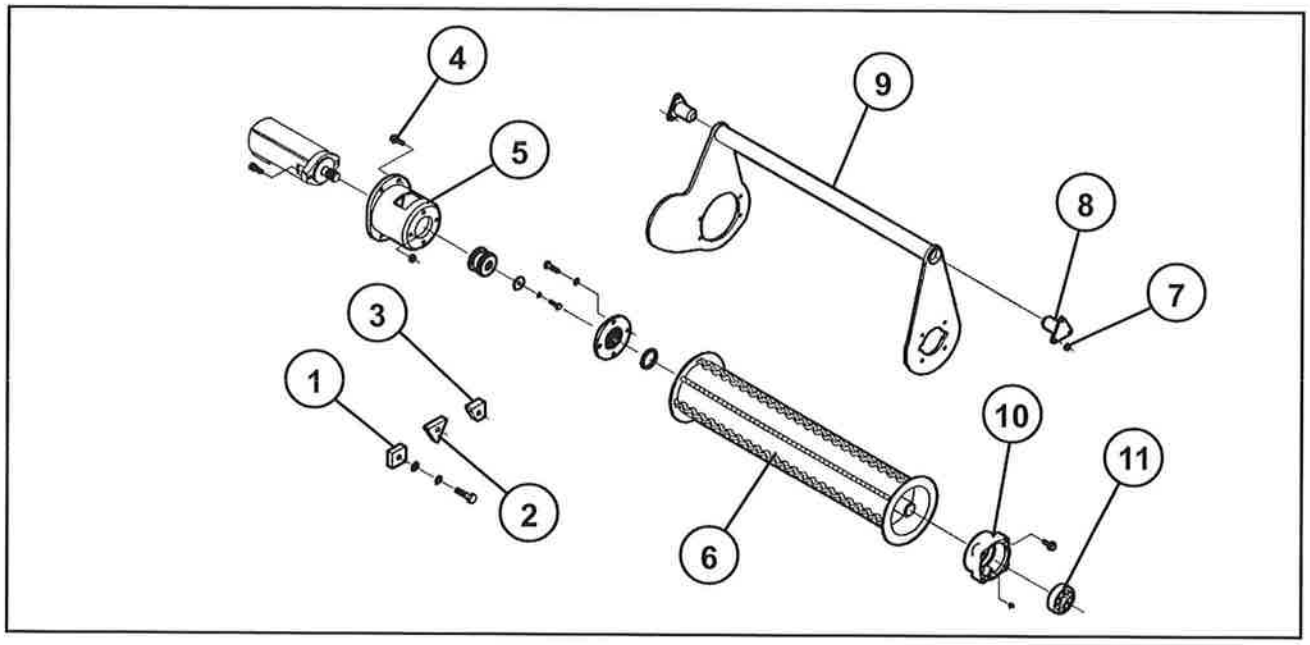

1

1 - Stop
2 - Stop
3 - Stop
4 - Flanged nut
5 - Hydraulic motor housing
6 - Roller
7 - Nut
8 - Pivot pin
9 - Arm
10 - Bearing housing
11 - Bearing

ROLLERS AND HOUSING PRE-ASSEMBLY

1. Upper rollers pre-assembly (C2, C1, D)

1.1. Place the splined adapters on the roller and fasten them with bolts and lock washers. Apply Loctite 262 on the bolts.

NOTE: *Apply torque of 90 - 105 N.m.*

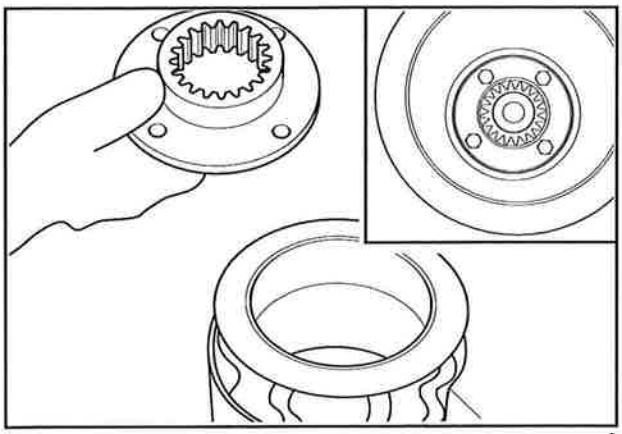

2

1.2. Turn the device 180° so that the opposite end of the roller faces up.

Assemble the housing (1) fastening it with the two mounting bolts (2) on the bearing housing, applying Loctite 262.

After the assembly, install the grease fitting.

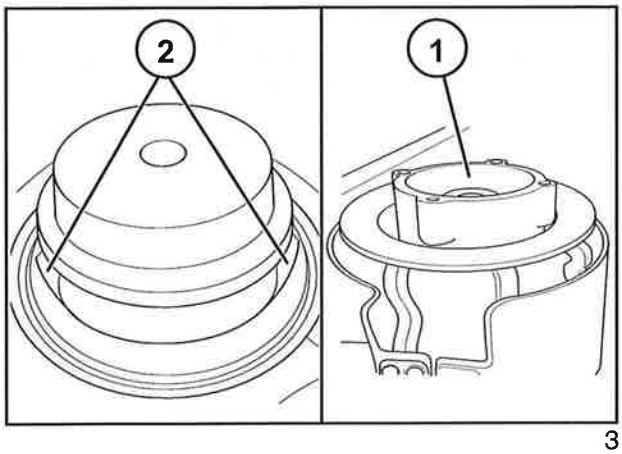

3

1.3. Assemble the floating arms "C2, C1, D" using bolts.

WARNING: *Assemble the floating arms with their ends facing the opposite side of the grease fitting.*

NOTE: *Apply torque of 75 - 105 N.m.*

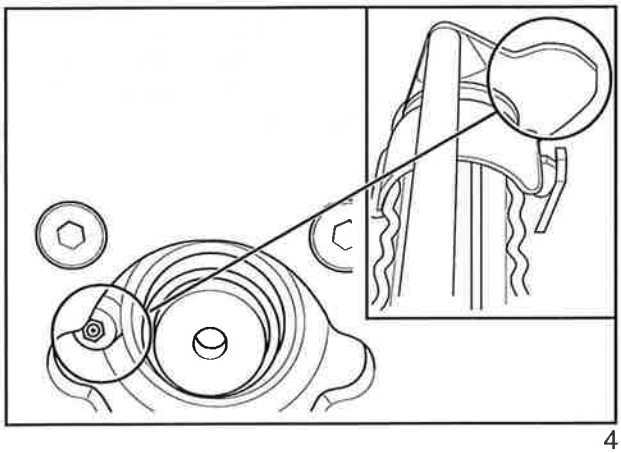

4

2. Lower rollers assembly ("I", "F", "E", "Buttlift", "Finned")

2.1. Place the splined adapters on both sides of Buttlift, Finned, "F" Roller. Fasten them with bolts and lock washers.

Apply Loctite 262 on the bolts.

NOTE: *Apply torque of 90 - 105 N.m.*

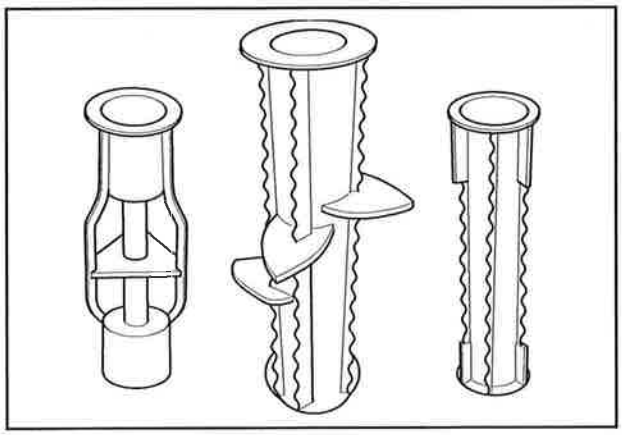

5

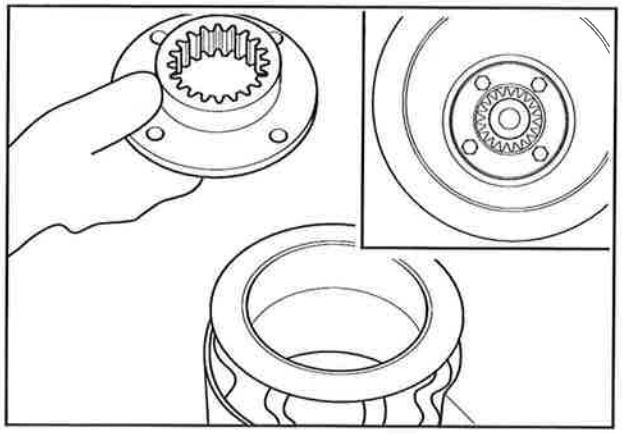

6

2.2. For "E" and "I" Rollers, assemble the splined adapters in one side only. Fasten them with bolts and lock washers.

NOTE: *Apply torque of 90 - 105 N.m.*

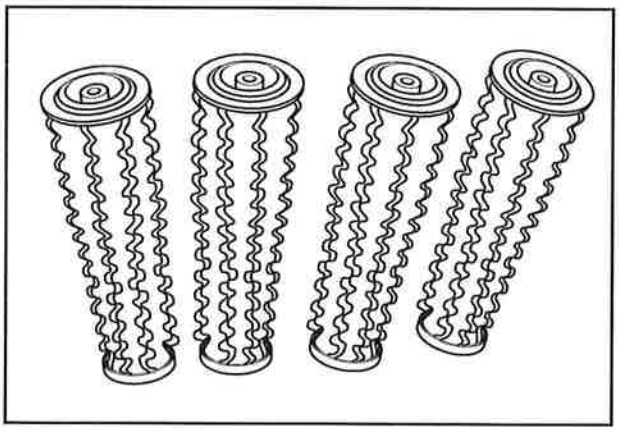

7

2.3. For the other side of "E" and "I" rollers, assemble the bearing housing (1), fastening it with two Allen bolts (2) located on the bearing, applying Loctite 262 on the bolts.

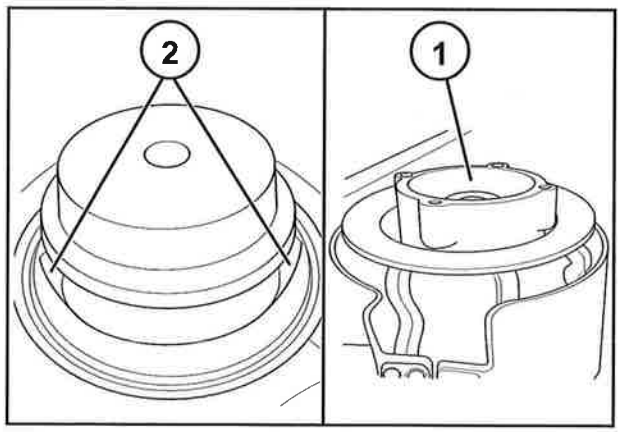

8

2.4. Assemble the four grease fittings to the housing.

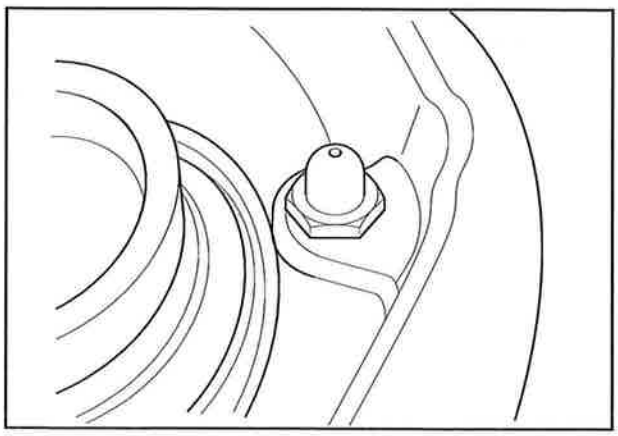

9

3. Cups assembly

3.1. Position the motor in the motor housing.

Make sure that the motor mounting position is aligned with the opening on the cup.

3.2. Apply a coating of Loctite 262 on the bolt body.

Fasten the motor on the housing using a bolt and a nut and apply torque of 110-130 N.m.

3.3. Apply an uniform coating of Araldite in the pinion inner spline.

3.4. Position the pinion, fitting it on the motor shaft.

3.5. Fasten the pinion on the motor shaft using a plain washer, lock washer and bolt and apply torque of 50-57 N.m.

3.6. Apply a uniform coating of anti-seize in the pinion outer spline.

3.7. Position the motor housing on the device secured to the bench and fasten it with the mounting pin.

3.8. Position the motor in the motor housing.

Make sure that the motor mounting position is aligned with the opening on the motor housing.

3.9. Apply a coating of Loctite 262 on the bolt body.

Install the motor on the motor housing and apply torque of 110-130 N.m.

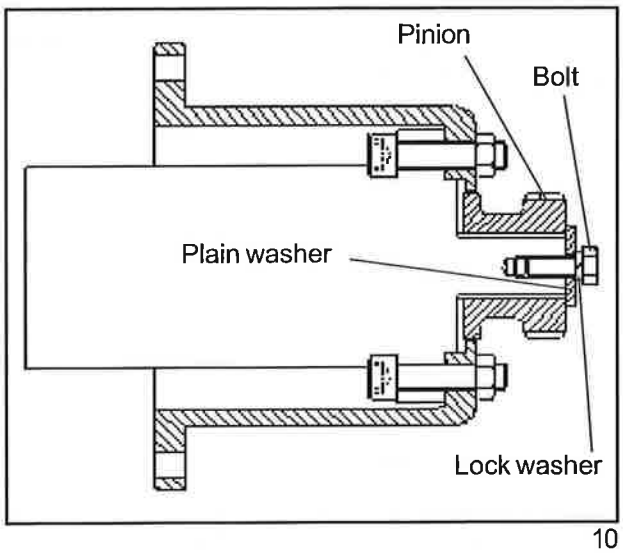

10

4. Assembling procedure for the roller train on the chassis

4.1. Apply anti-seize on the mounting pins in the roller supports and fasten them with knurled flanged nuts. Apply Loctite 262 and torque these nuts to 80 N.m.

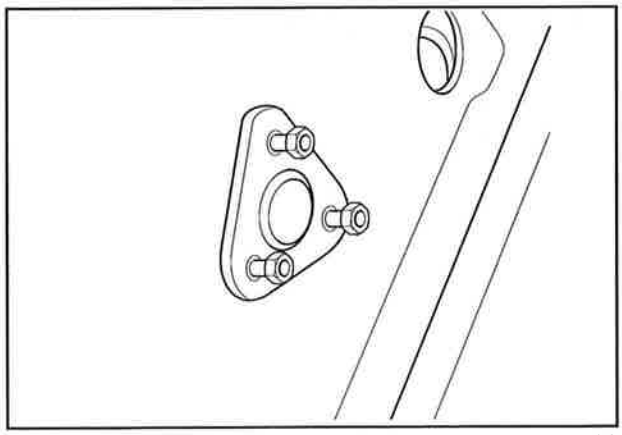
11

4.2. Apply anti-seize on the roller couplings and housings (1). Fasten them on the assembly with flanged bolts. Apply Loctite 262 and torque them to 80 N.m.

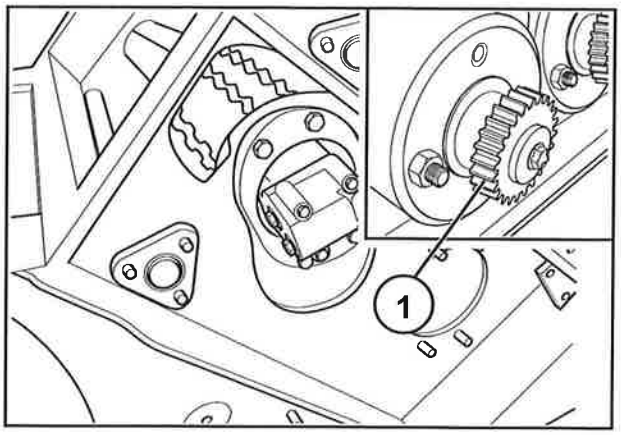

12

5. Lower stops assembly

5.1. Position the shims 10 mm under the motor housings to assemble the lower stops.

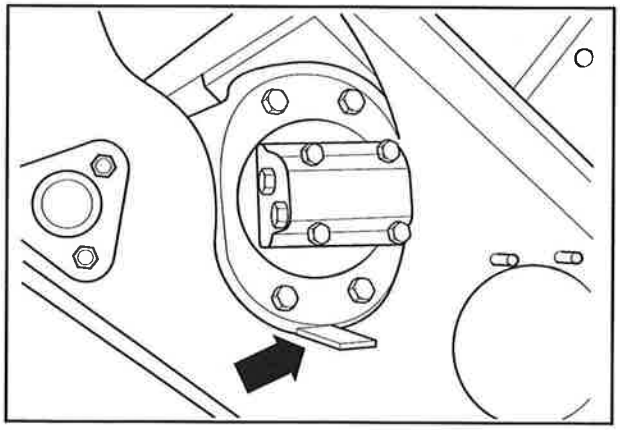

13

5.2. Position the lower stop and fasten them using bolts, lock washers and plain washers. Apply Loctite 262 on each stop.

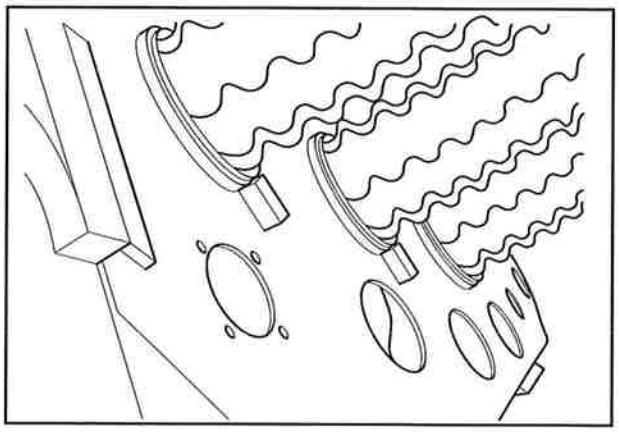

14

6. Lower rollers assembly

6.1. Fasten the housings using bolts and plain washers. Apply Loctite 262 and torque them to 80 N.m.

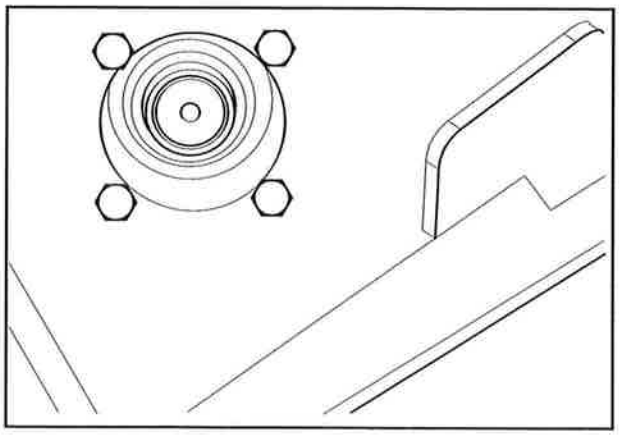

15

6.2. Apply anti-seize on the motors coupling pre-assembled on the housings.

Position the coupling on the rollers housing and fasten them with flanged nuts. Apply Loctite 262 and torque them to 80 N.m.

NOTE:

a) For single motor driven rollers, do not install spacers.

b) For dual motor driven rollers, observe the following procedure:

- Place a spacer at the end of each partially assembled roller.

- Check the clearance (7 mm max., 2 mm min).

- Add or remove spacers, as necessary.

BASECUTTER GEARBOX

DESCRIPTION

The gearbox has a stiff construction and it is assembled and fastened with bolts to the machine sidewalls. The basecutter legs are driven and kept in synchronism by a set of gears located inside the gearbox.

The driving power is supplied by a hydraulic motor M51, assembled on the left side of the gearbox. The disc rotation speed is 640 RPM and the gearbox ratio is 2.65:1.

It is recommended to remove the cutting knives first, before removing the gearbox.

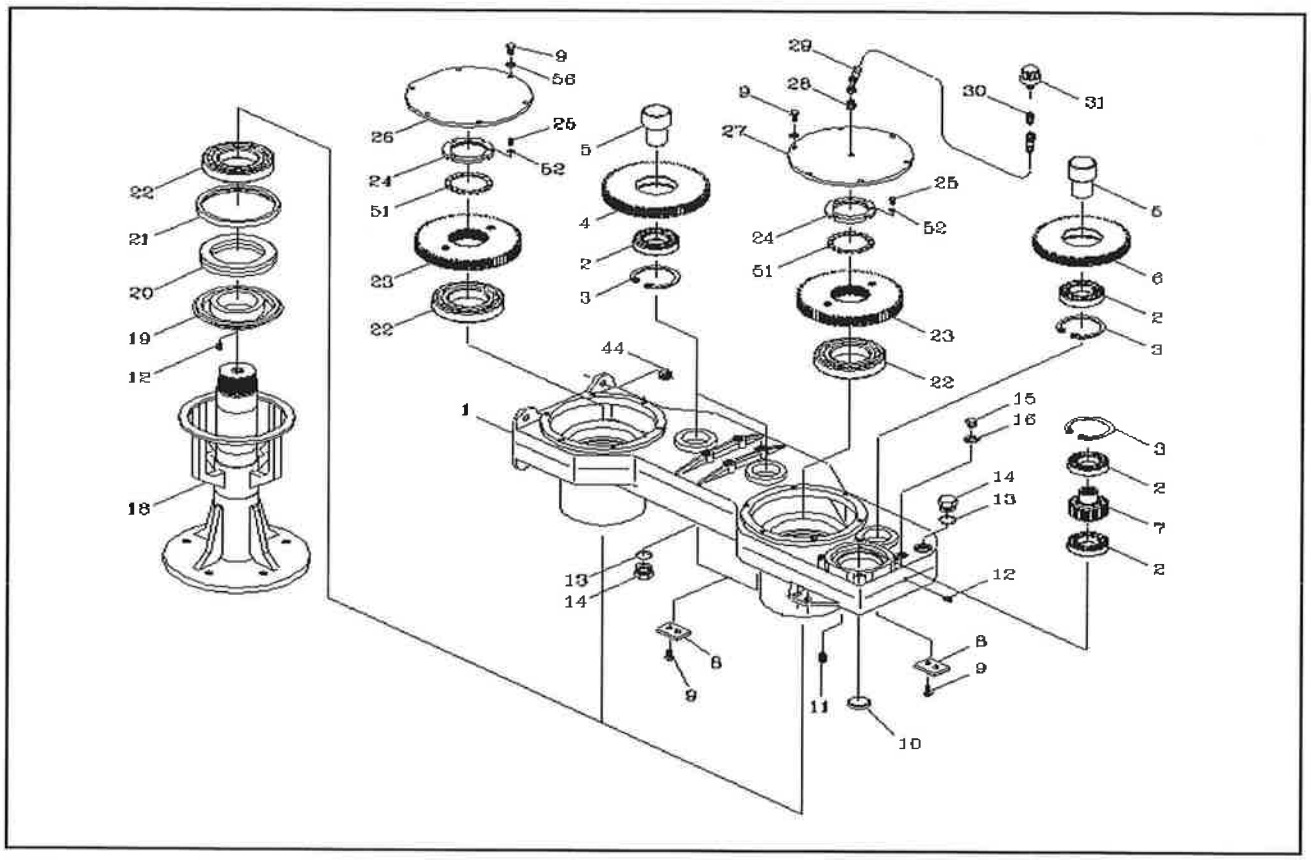

1

REMOVAL

1. Loose the motor from the gearbox and separate them.

   NOTE: *Do not remove any hose. Remove the deflector plates and the scrapers from the sidewalls with the tie rod.*

2. Disconnect the breather on the upper part of the gearbox.

   NOTE: *For harvesters equipped with tracks (A8800), remove the finned roller by removing the motor assemblies on each side. To make easier the access, the knockdown roller can also be removed. For harvesters equipped with tires (A8000), the gearbox can be removed through the side of the machine, thus is not necessary to remove the rollers.*

3. Lower the machine until the basecutter touches the ground. Remove the bolts fastening the gearbox to the sidewalls.

   Lift the machine, leaving the gearbox on the ground.

4. Remove the supports from the left and right side on the gearbox (four bolts in each side) and the support on left side of the chassis (two bolts).

5. After gaining enough room, the gearbox can be removed through the sidewall from harvester equipped with tires (A8000). On harvester equipped with track (A8800), the gearbox can be turned until it is released and removed through the front side of the machine.

6. After the removal, the gearbox can be disassembled and cleaned for the repair. Assembly is in the reverse order of disassembly.

DISASSEMBLY

1. Remove the covers from the basecutter legs to gain access to its nuts.
2. Remove the lock nuts from the basecutter legs (the nuts are glued with Araldite, so it may be necessary to heat the area to release the nuts). Place a pin between the gear teeth to allow the nuts to be unscrewed without damages.
3. Remove the gears from the top of the basecutter legs.

   NOTE: *The gear pins are glued with Araldite, so it is necessary to use a heat source to release them.*

   Then the gears can be removed from the pulley through the holes on the basecutter legs cover.
4. Remove the bearing snap ring from the input gear, the input bearing and the lower bearing.

   NOTE: *The pinion can be removed by removing the seal on the gearbox lower face and, then, removing the pinion with a driver. The gearbox case has two threaded holes with plugs: by removing these plugs, there will be enough room on the rear part of the pinion lower bearing for the removal.*
5. Remove, clean and inspect all components for wear or damages and replace them as necessary.

CAUTION DURING DISASSEMBLY

- *Check the condition of the frame and the basecutter legs.*
- *Remove the legs and check the conditions of the bearings and seals.*
- *Check the condition of the gears and pinion bearings.*
- *Check the condition of the basecutter disc; the disc diameter shall not be less than 546 mm.*

ASSEMBLY

1. Cleanliness

1.1. Inspect for the existence of porosity caused by the casting process.

1.2. Before starting the assembly, prepare the casting housing removing burrs and chips.

1.3. Clean it with a soft cloth and SPRAY LOCTITE 7070 degreaser on the housing inner and outer sides.

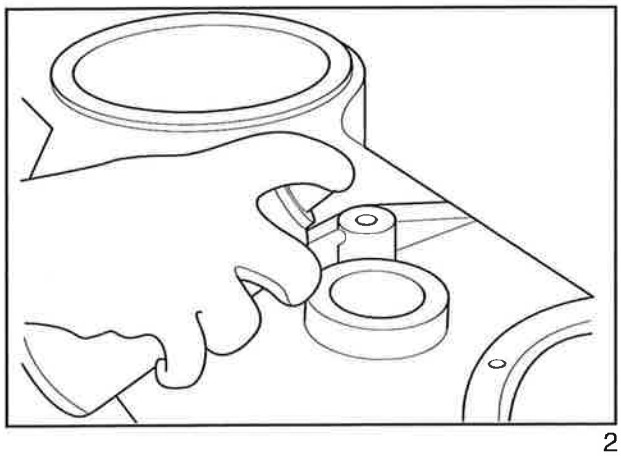

2

1.4. After cleaning the housing, use a paper towel on the bearing housings areas for better cleaning.

1.5. Inspect for the existence of porosity caused by the casting process.

NOTE: *After cleaning the upper side, turn it 180° and repeat the procedure on the lower side (legs housing).*

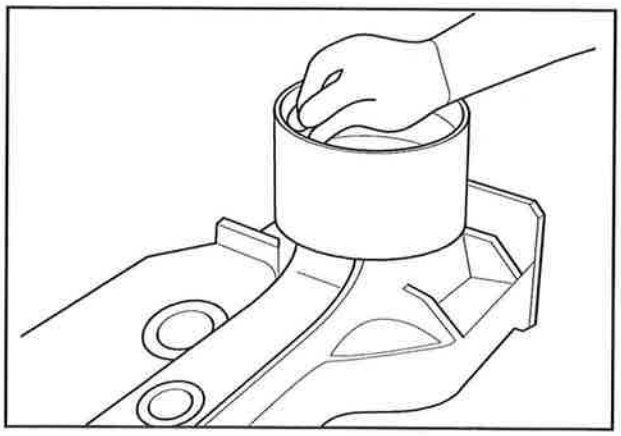

3

1.6. Prepare the pinion and the bearing for the assembly, using a cloth to remove foreign materials.

- Bearing: 2 parts
- Snap ring: 1 part
- Pinion: 1 part

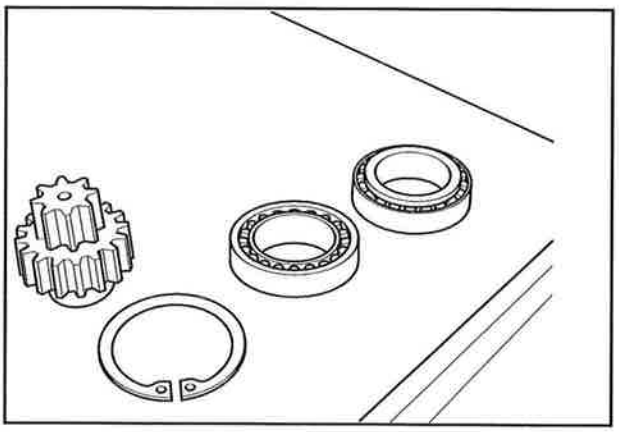

4

1.7. Apply LOCTITE 601 on all bearing's outer race and install the bearing into the housing by the inner side.

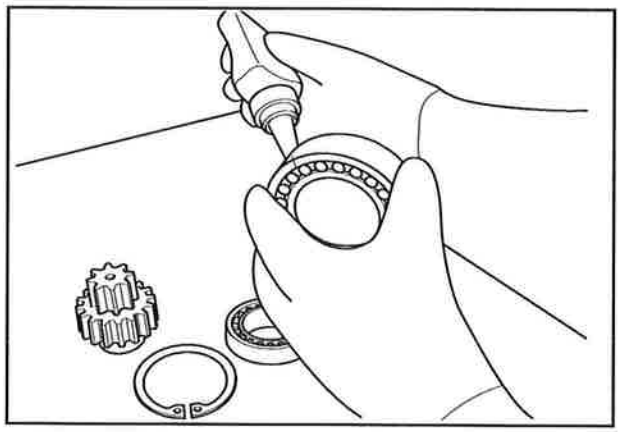

5

1.8. Press in the lower bearing, pulling the lock on the arm and inserting the tool rod until locking the bearing.

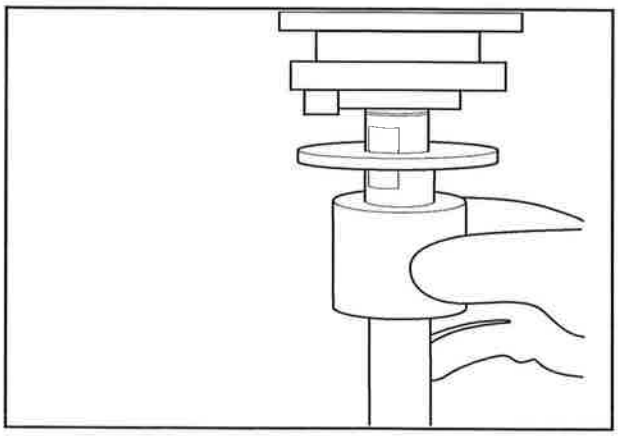

6

1.9. Apply LOCTITE 601 on the pinion.

1.10. Position the pinion inside the bearing.

1.11. Position the second bearing in the pinion and press it in.

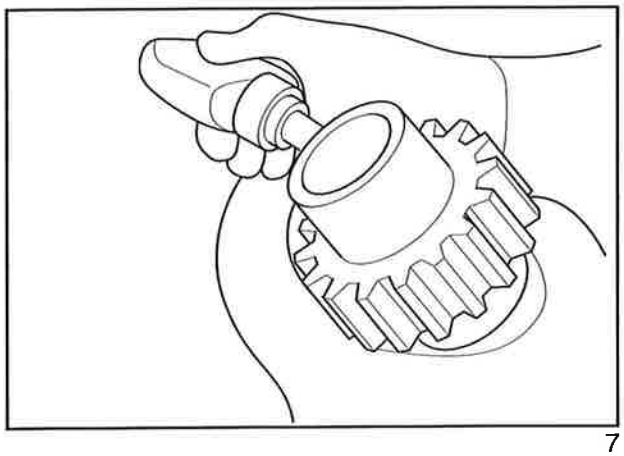

7

1.12. Lock the snap ring with a straight tip pliers.

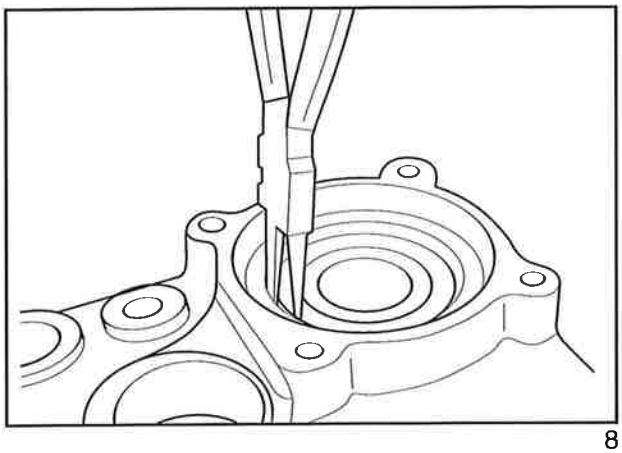

8

2. Plugs assembly

2.1. Apply LOCTITE 570 (thread sealing).

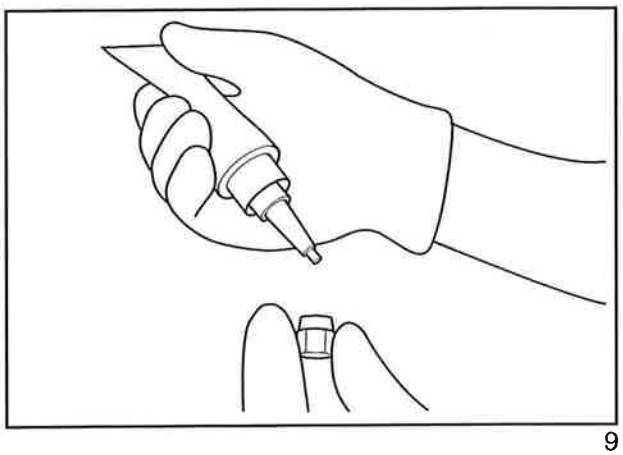

9

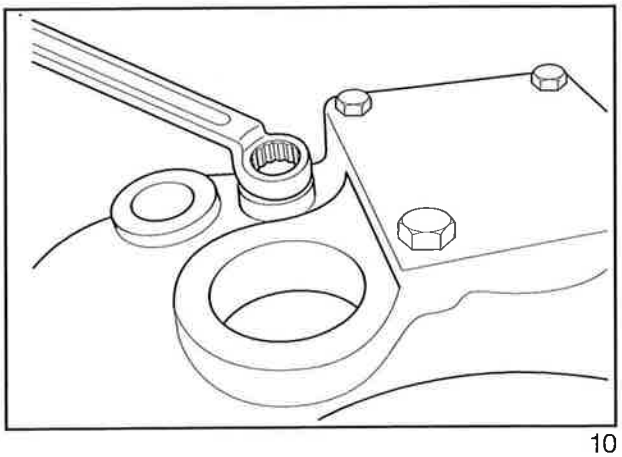

10

2.2. Install the oil plug with the ring.

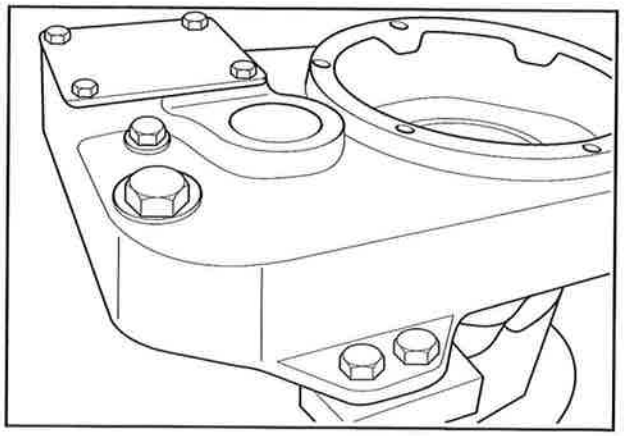

11

2.3. Install the plug on the left side of the housing.

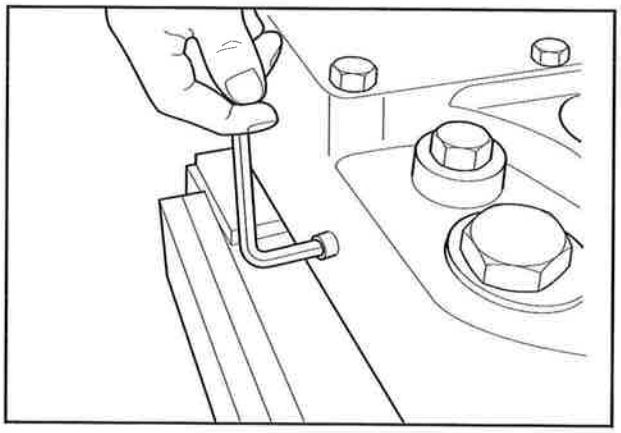

12

2.4. Apply LOCTITE 601 on the four sealing bolts of the housing holes.

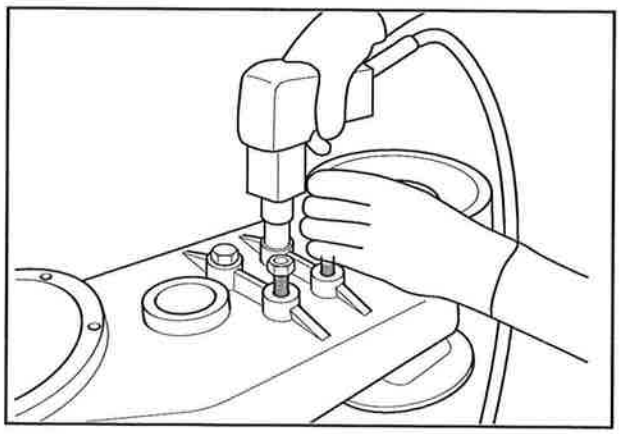

13

3. Gears assembly

3.1. Clean the gears, rings and bearings using SPRAY LOCTITE 7070 degreaser.

- Gears: 2 parts
- Gear: 1 part
- Bearings: 3 parts
- Rings: 3 parts

3.2. Apply LOCTITE 601 on the bearings outer races and position them inside the gears. If necessary, press in the bearing if the gear is interfering with the bearing.

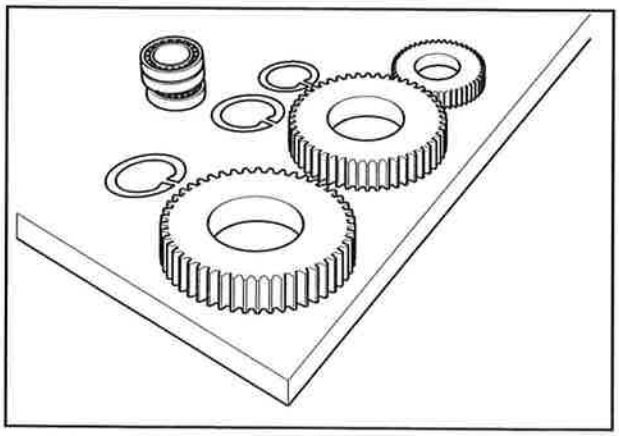

14

3.3. Lock the snap ring.

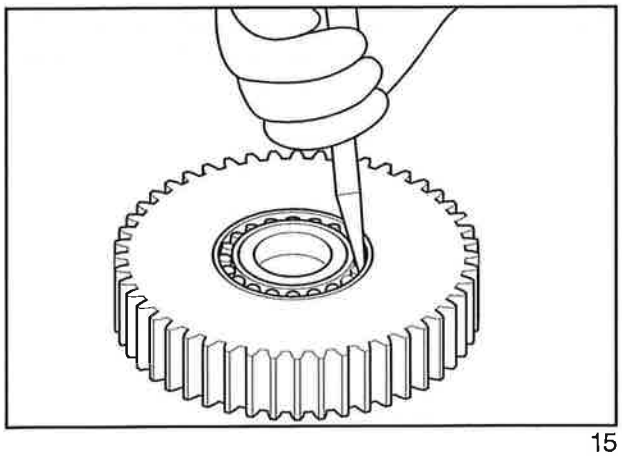

15

3.4. Apply INDUSTRIAL ARALDITE 24 hrs on the housing lower side in the gearbox.

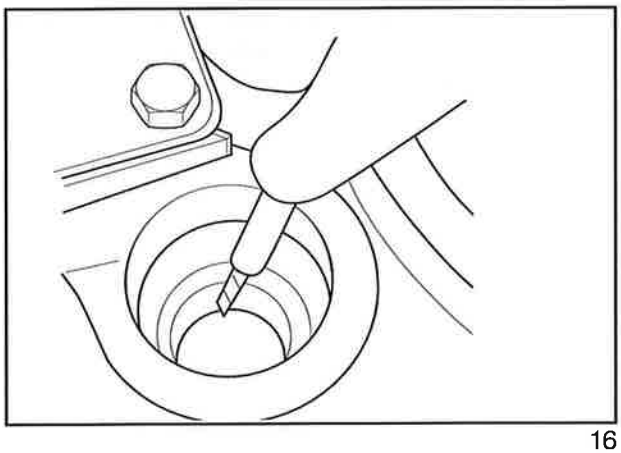

16

3.5. Install the gears in the gearbox; align them with the matching holes.

NOTE: *When positioning the gears on the gearbox, the snap ring side must be facing down.*

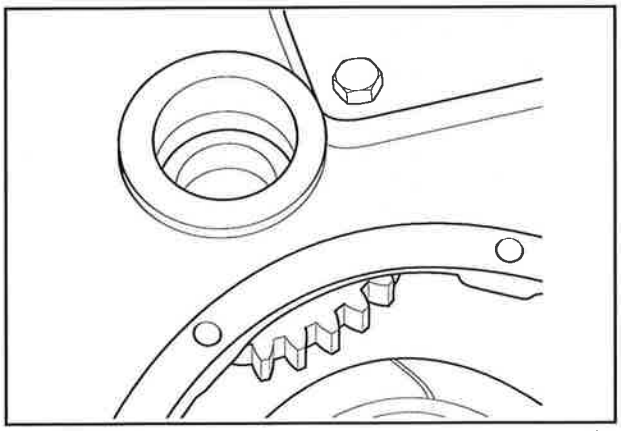

17

- Gears no. 1, 2, 3 positioning

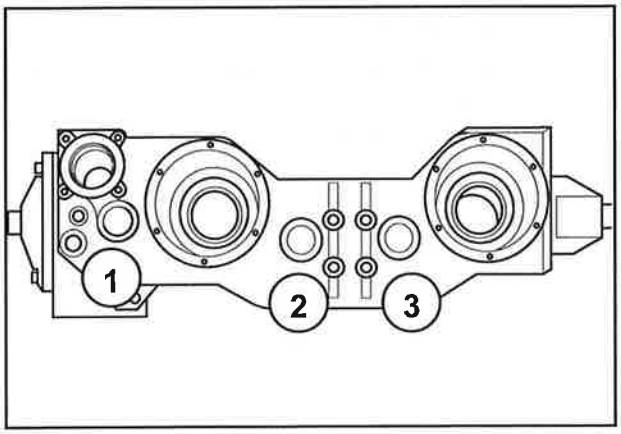

18

3.6. After installing the gears, apply INDUSTRIAL ARALDITE 24 hrs on the pin's larger diameter.

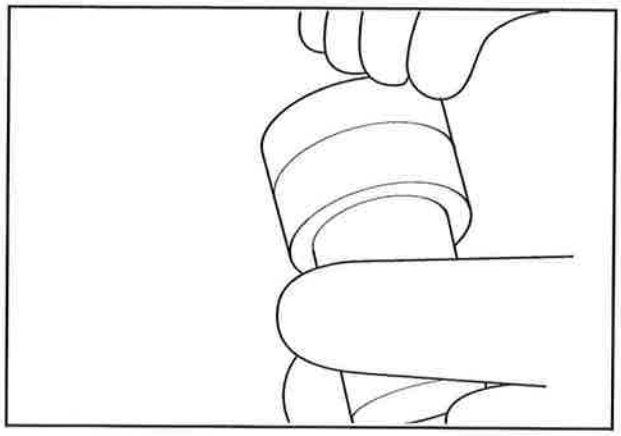

19

3.7. Position the three pins in the housing and tap them until the hole in the housing and the gear are aligned.

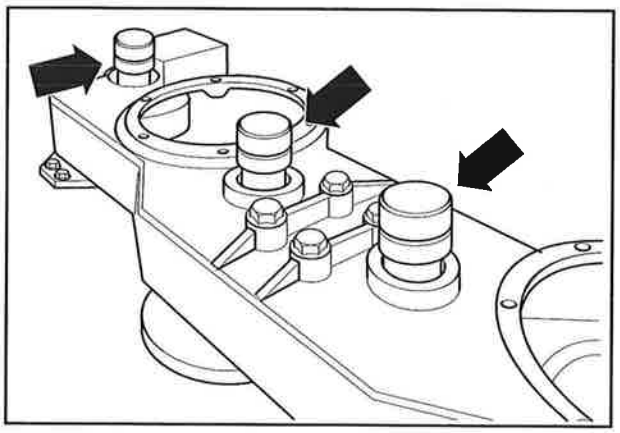

20

3.8. Press in the pins.

3.9. Remove the excess of Araldite from the pins and the housing by using a cloth.

3.10. After the complete assembly, spin the gears with your hands to check if they rotate smoothly.

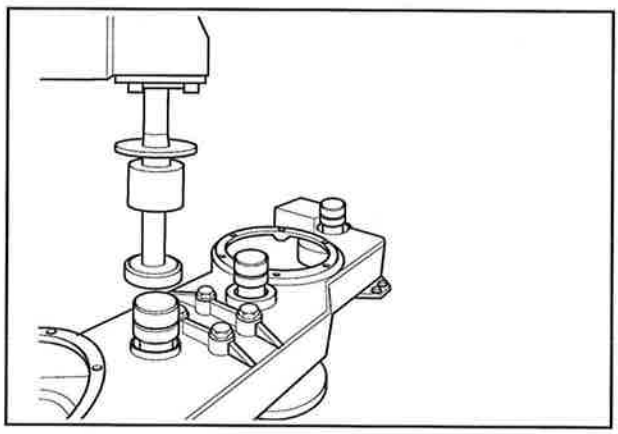

21

4. Bearing cup assembly

4.1. Prepare the bearing by removing its cup and cleaning it with SPRAY LOCTITE 7070 degreaser and a cloth.

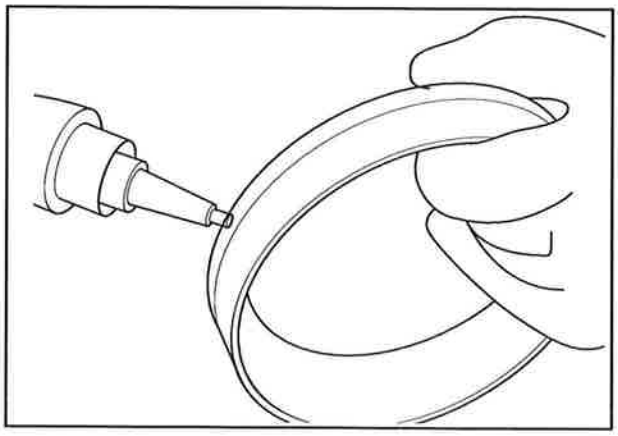

22

4.2. After cleaning, apply LOCTITE 601 on the bearing housing outer surface and install them in the basecutter gearbox.

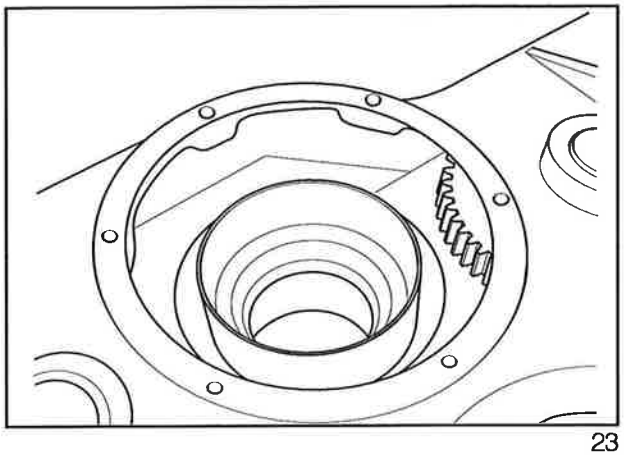

23

4.3. Press in the bearing housing. After the assembly, clean the cup with a cloth.

NOTE: *Repeat the procedure for the right side.*

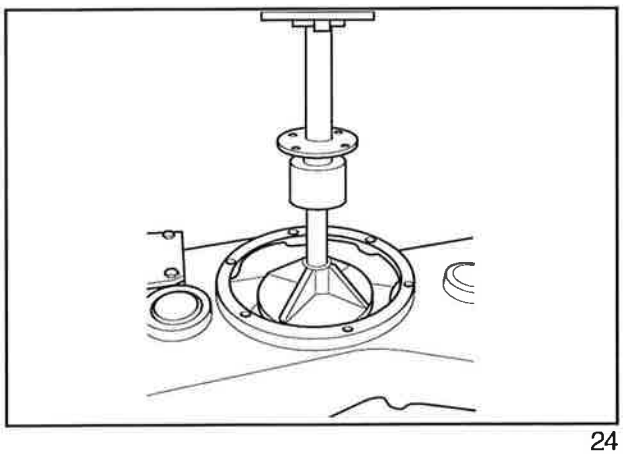

24

4.4. Clean the seal insert with LOCTITE 7070 degreaser spray and a clean cloth; then, apply LOCTITE 801 on the gearbox, on the place where the insert will be installed.

WARNING: *Before assembling the insert, check the casting for burrs or machining defects. These malfunctions may lead to leaking on the leg after the assembly.*

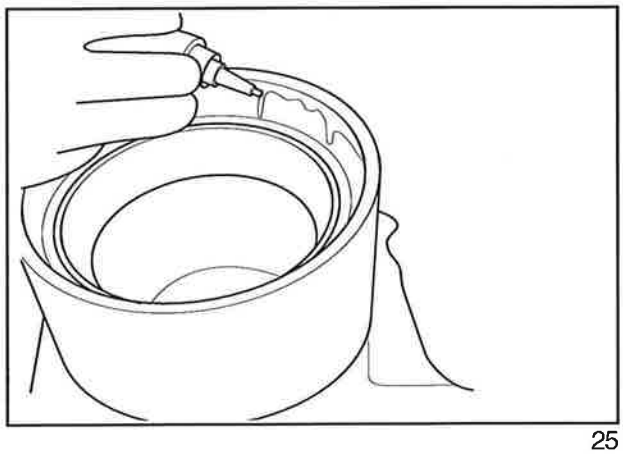

25

4.5. Press in the insert.

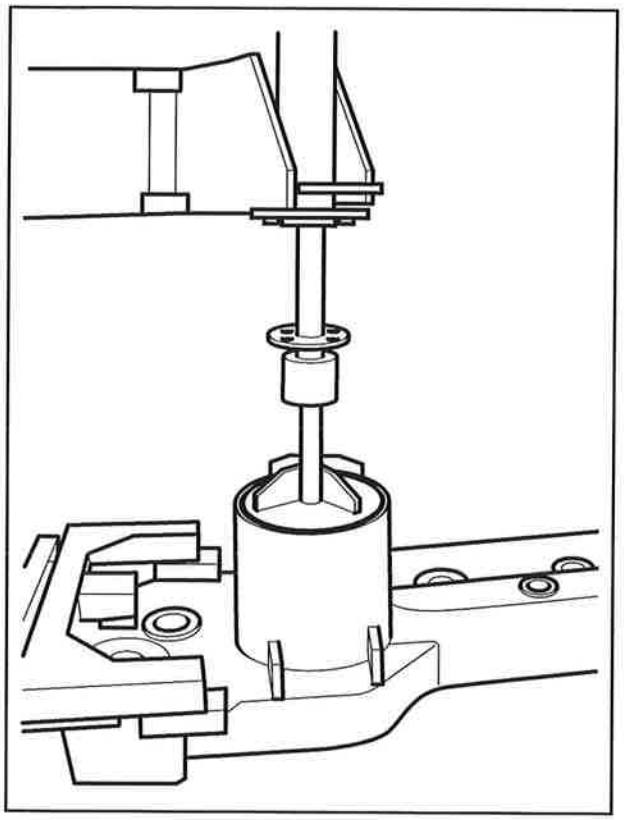

26

4.6. After pressing, remove the excess of Loctite with a paper towel.

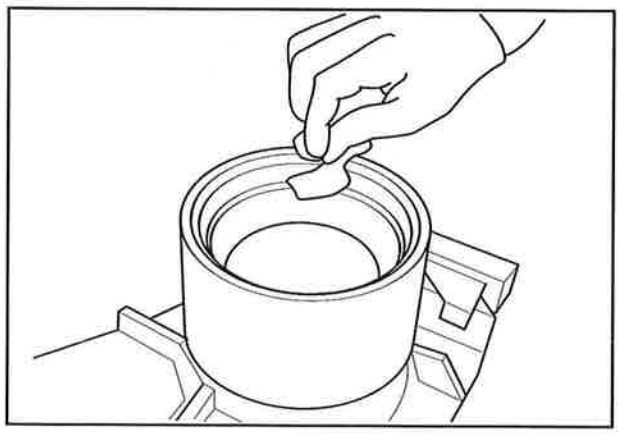

27

5. Pinion plug assembly

5.1. After pressing, remove the excess of Loctite with a paper towel.

Apply INDUSTRIAL ARALDITE 24 hrs on the plug and install it in the gearbox.

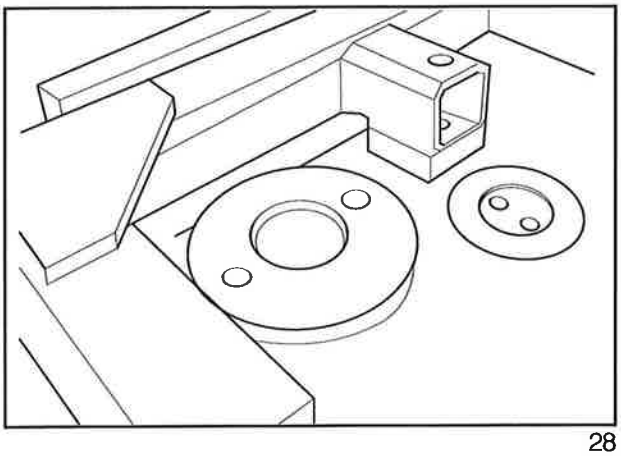

28

5.2. Press in the plug. After pressing, use a cloth to remove the excess of Araldite from the part and the tool.

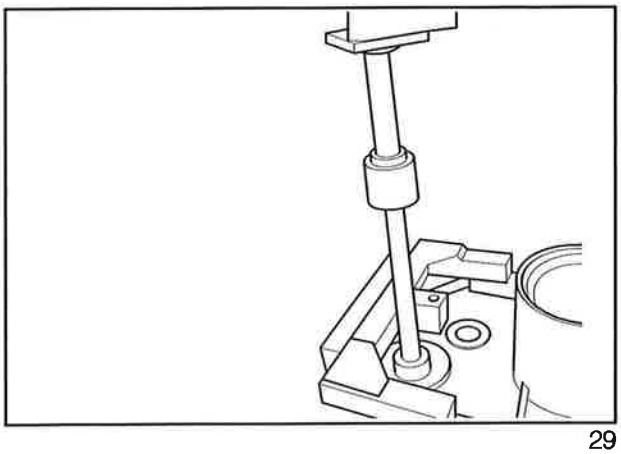

29

5.3. Apply LOCTITE 570 on the threads of the two plugs and install them in the gearbox.

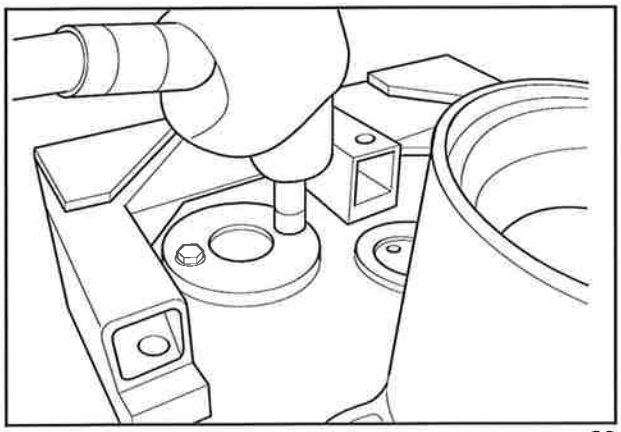

30

5.4. Lock the pins applying LOCTITE 262 on the bolt threads; apply on the three mounting plates that will be positioned according to the pins threads position and fasten them.

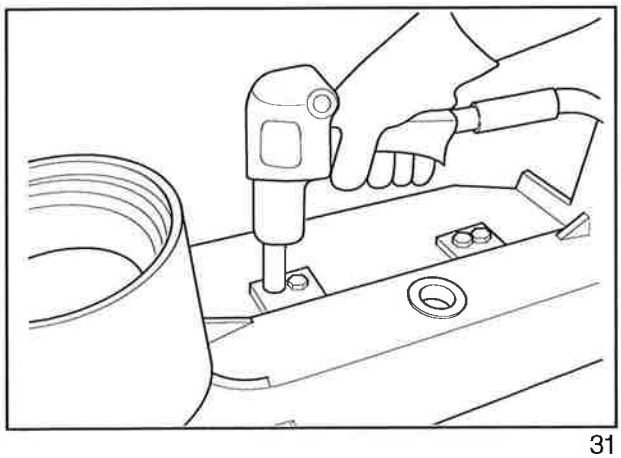

31

5.5. Apply LOCTITE 290 on the plug threads and install it.

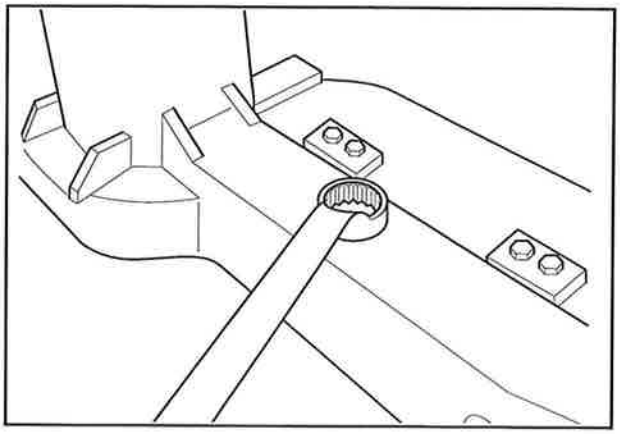

32

6. Basecutter legs assembly

6.1. Apply LOCTITE on the plug threads and screw it in the seal housing.

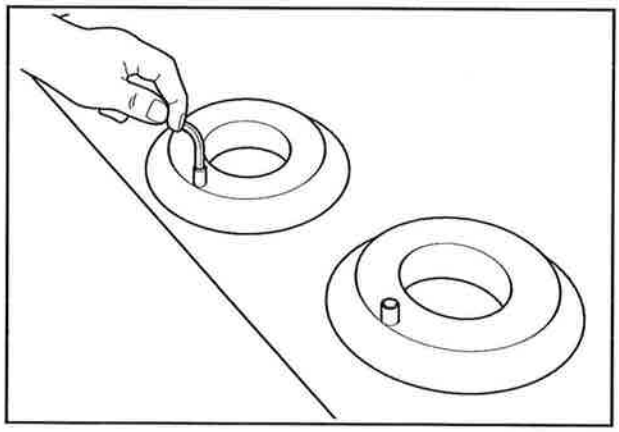

33

6.2. After the plug assembly, use a cloth to clean the housing upper part; turn over the part and apply LOCTITE 7070 spray degreaser and use a cloth to clean it.

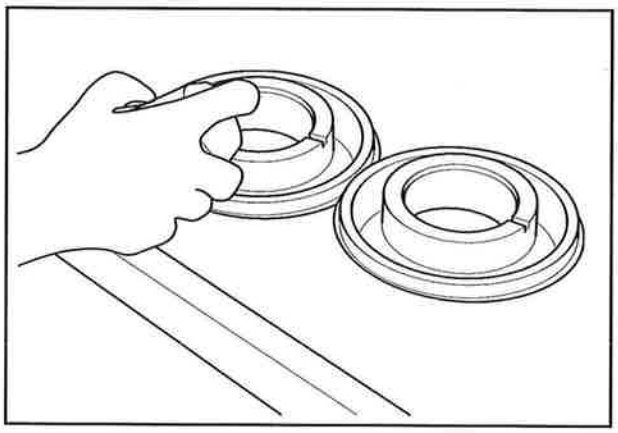

34

6.3. To install the housing on the leg, apply LOCTITE 7070 spray degreaser on the inner leg and clean it with a cloth.

NOTE: *Clean all leg surface.*

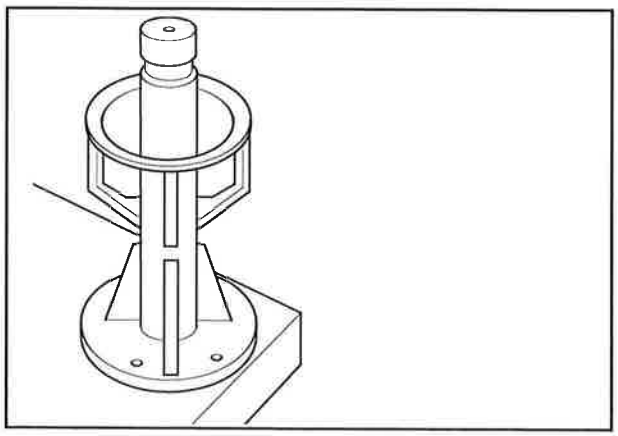

35

6.4. After cleaning the leg, apply LOCTITE 601 on the housing seating area (1).

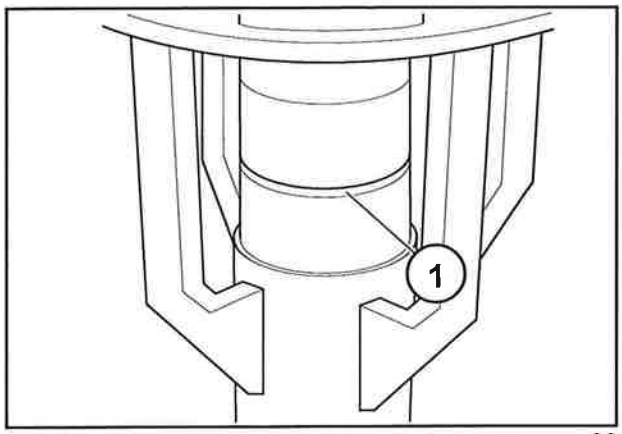

36

6.5. Place the housing on the legs, aligning the hole on the housing with the hole on the central part of the cutting knife; next, apply LOCTITE 601 between the leg and the housing for a better fastening.

To install the bearing on the legs, warm up the bearings until they fit on the legs.

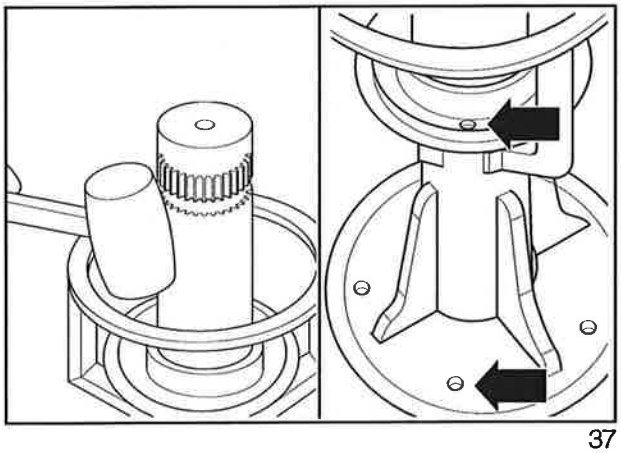

37

6.6. To install the seals on the gearbox and leg, first open the package and clean the o-ring and machined ring set with a paper towel and alcohol.

Each package contains 2 sets of rings: one for the gearbox and the other for the leg on the same side.

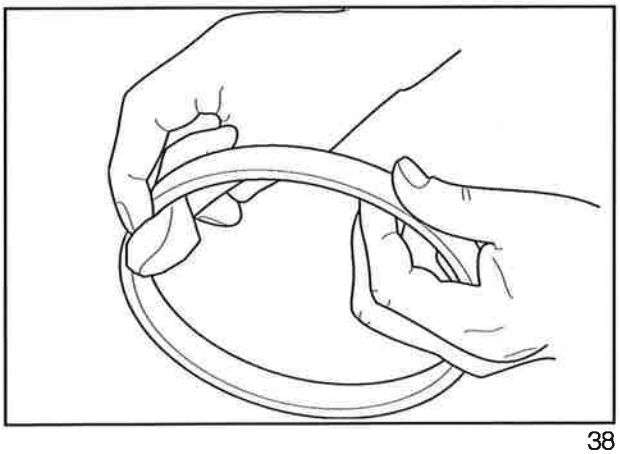

38

6.7. After cleaning, install the o-ring in the machined ring, position the set in the gearbox and, with the help of the special tool, install the o-ring in the gearbox.

NOTE: *After the assembly, use a paper towel to clean the area nearby the seals.*

NOTE: *Repeat the same procedure for both sides (left and right sides).*

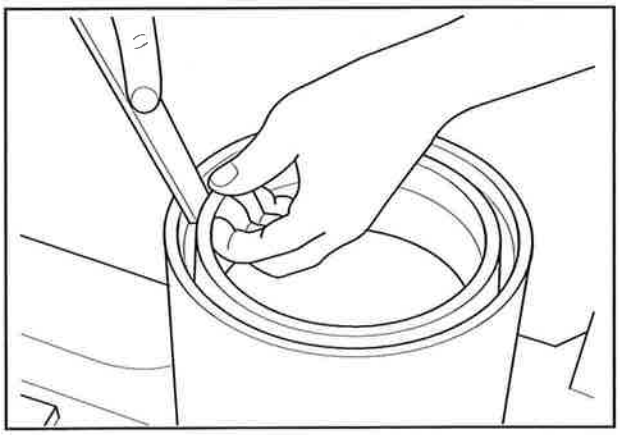

39

6.8. Using a paper towel soaked with alcohol, clean the area on the leg where the seal will be installed.

NOTE: *Repeat the same procedure for both sides (left and right sides).*

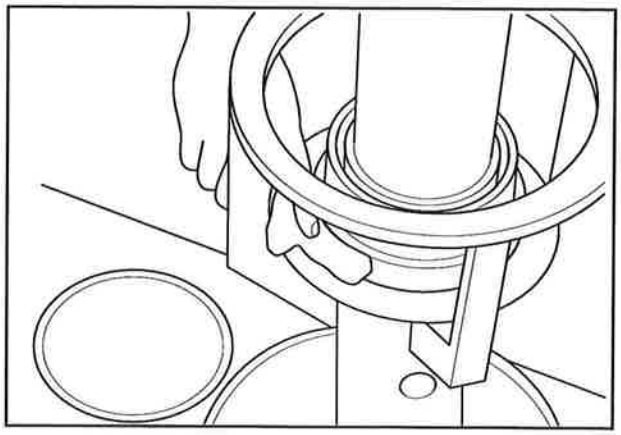

40

6.9. Place the seals set in the leg and clean them again with a paper towel.

NOTE: *The seal must be from the same package of the seal used on the same side in the gearbox.*

NOTE: *Repeat the same procedure for both sides (left and right sides).*

WARNING: *Be careful when using sharp-tip tools.*

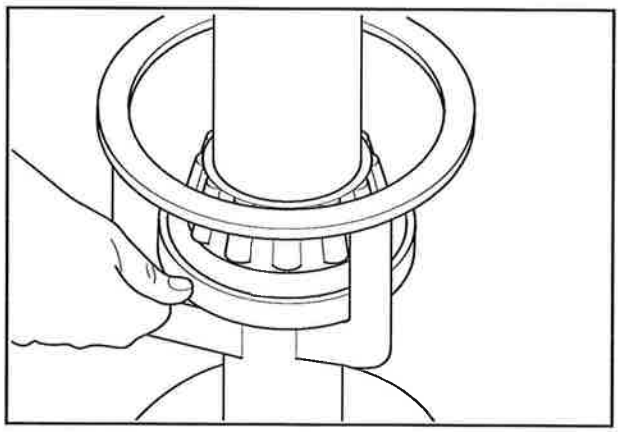

41

6.10. After positioning the leg, install the bearing in the leg.

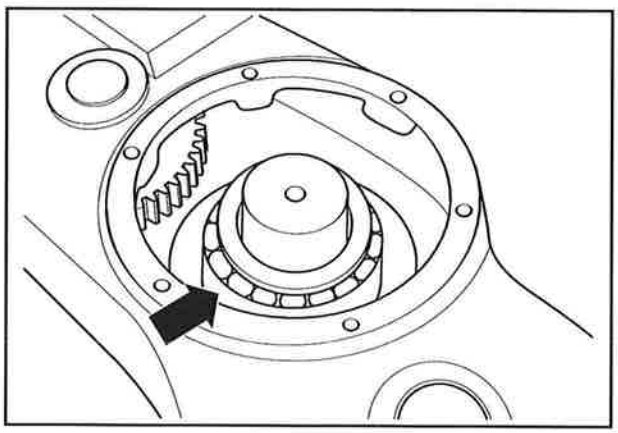

42

WARNING: *To press in the bearing, the legs supports must be on the upper position, standing on the legs.*

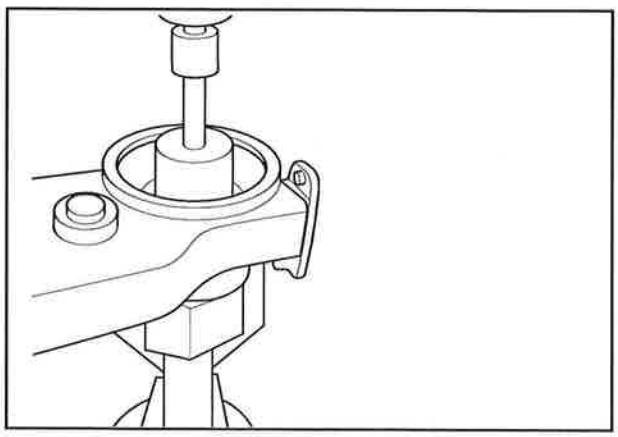

43

7. Gears assembly

7.1. Prepare two gears, by screwing two M16x100 bolts on them to help the handling and assembly them in the gearbox left side.

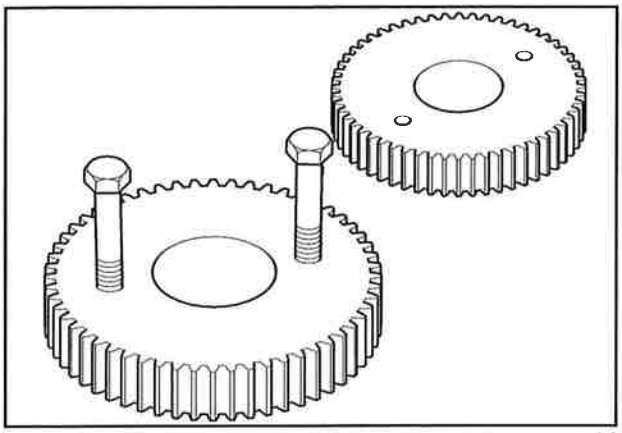

44

7.2. Apply 24-hour ARALDITE on the inner teeth and position the gear in the gearbox.

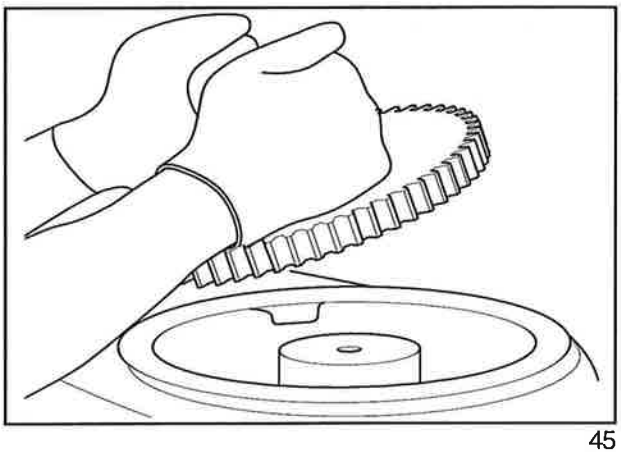

45

7.3. After installing the gear, install the lock washers, apply 24-hour ARALDITE on the threads and install the lock nut.

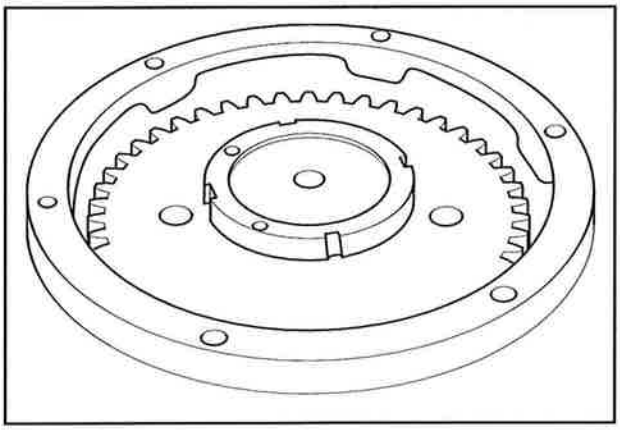

46

7.4. Tighten the nut.

WARNING: *To lock the assembly, the nut must be tightened until there is no clearance on the bearing. Next, loose the nut again and tighten it just the enough to align the locking bolt hole.*

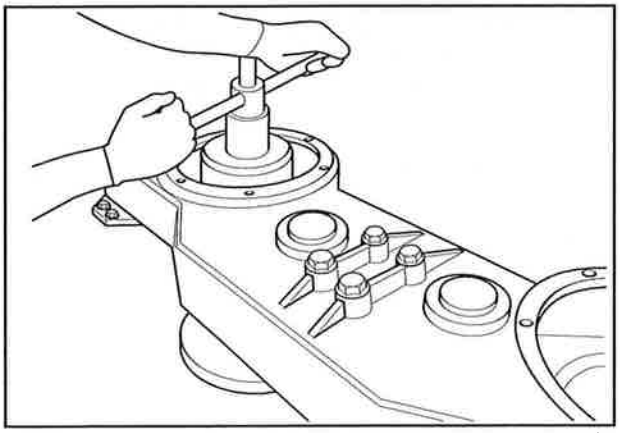

47

7.5. After installing the assembly, align the gears on the left and right legs with the tool installed on the legs and using 3 M16x30 bolts on the left leg and 2 bolts on the right leg.

NOTE: *For a 5-knive basecutter, use special tool P/N 87254719. For the 6-knive basecutter, use the special tool P/N 87242844.*

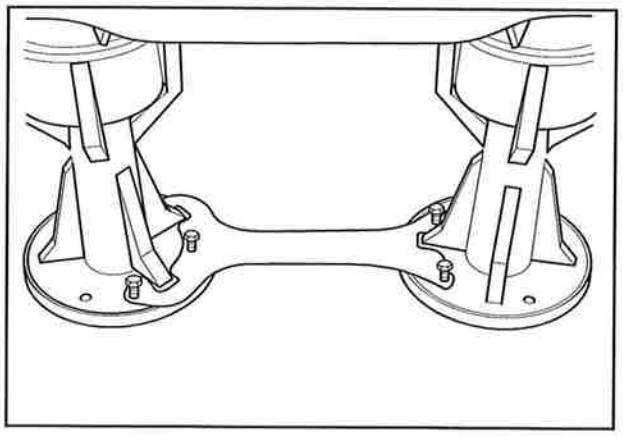

48

7.6. After the timing setting, repeat the assembly procedure for the right side.

NOTE: *In some cases, it may be necessary to press in the gear one more time, by installing the special tool P/N 87223442 on the machine and pressing the gear in.*

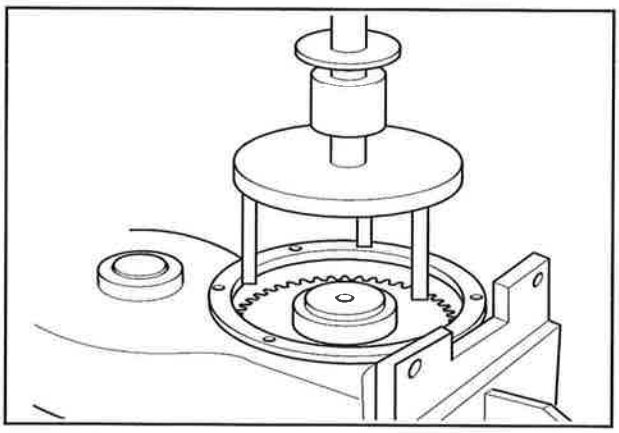

49

7.7. To finish the assembly, align the lock nut threads, the lock washer and the gear. Only if necessary.

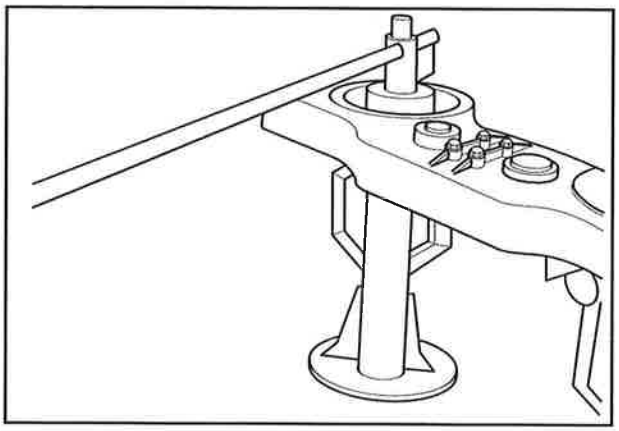

50

7.8. After the alignment, apply LOCTITE 262 on the bolt, install the plain washer and install the bolt on the lock nut, using the 10 mm combined wrench.

NOTE: *Repeat the assembly procedure for the right side.*

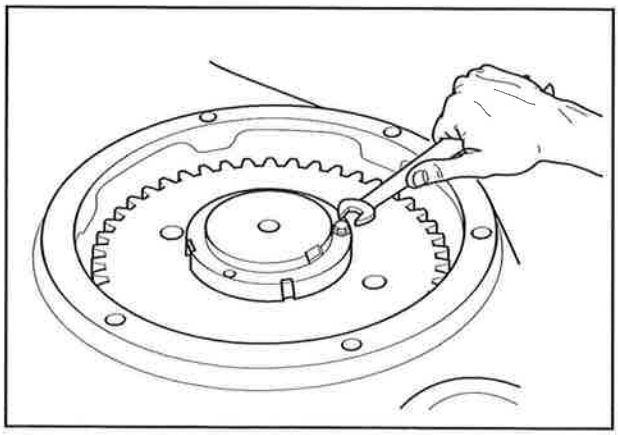

51

7.9. Remove the alignment tool and turn the legs with your hands to check if they are rotating freely (there must not be an excessive resistance to the rotation.)

7.10. Install the M16 x 35 bolts on the left and right legs threads as a protection for the paint.

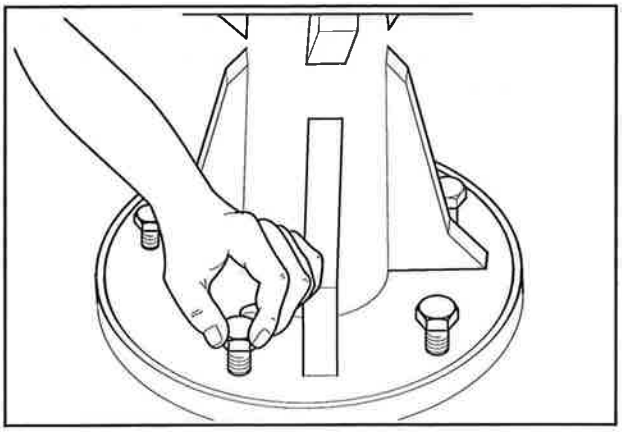

52

8. Covers assembly

8.1. Clean the left and right sides covers with a degreaser and a clean cloth.

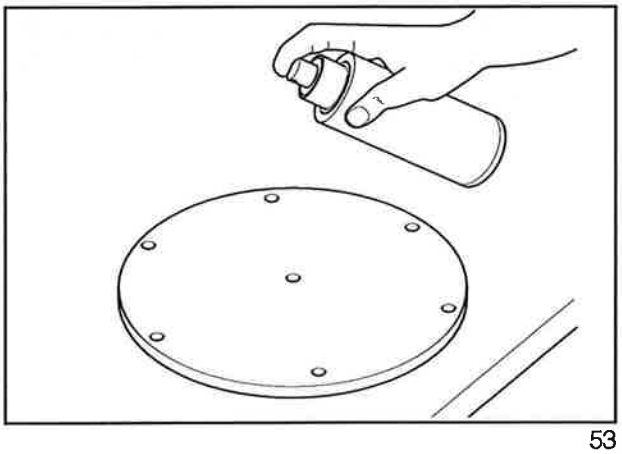

53

8.2. Apply LOCTITE 598 BLACK all extension of the casting part where the cover will be installed. Repeat the procedure for the right and left sides.

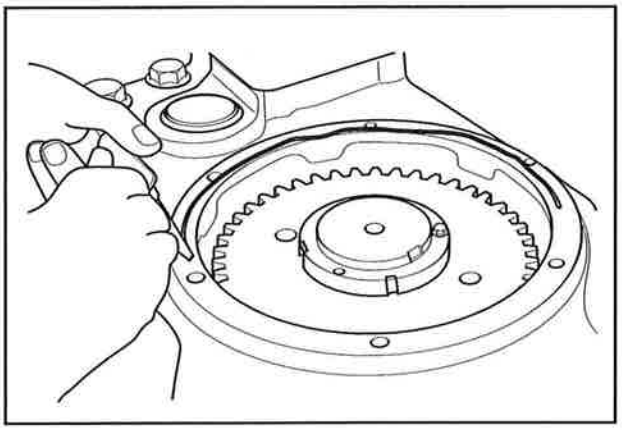

54

8.3. Place the cover on the casting part, apply LOCTITE 598 on the 06 bolts and install them with 06 plain washers using a #17 combined wrench. Tighten the bolts on a criss-cross pattern for a better spreading of Loctite. Repeat the procedure for the right side.

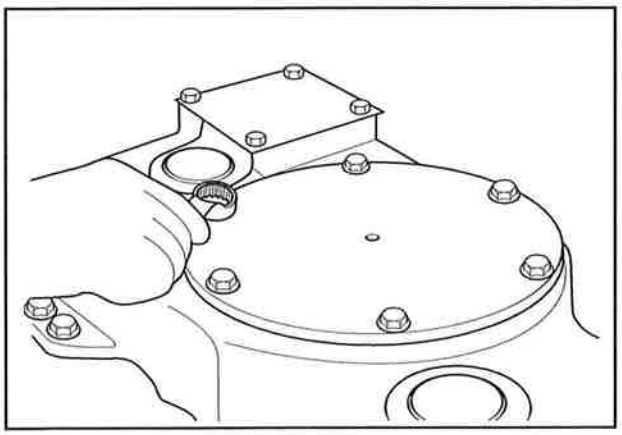

55

8.4. On the center of the left side cover, install the adapter using LOCTITE 570 on the adapter threads.

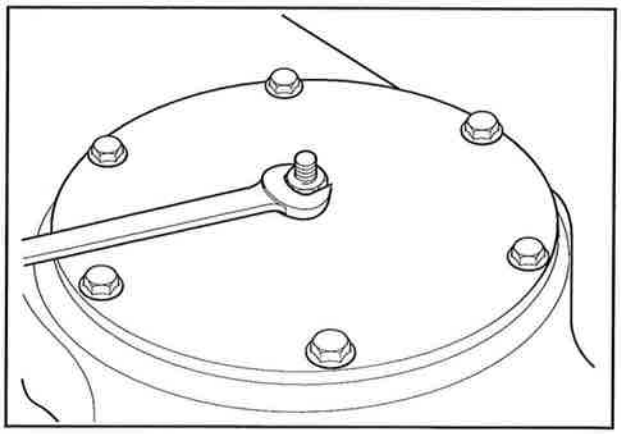

56

8.4. On the center of the left side cover, install the adapter using LOCTITE 570 on the adapter threads.

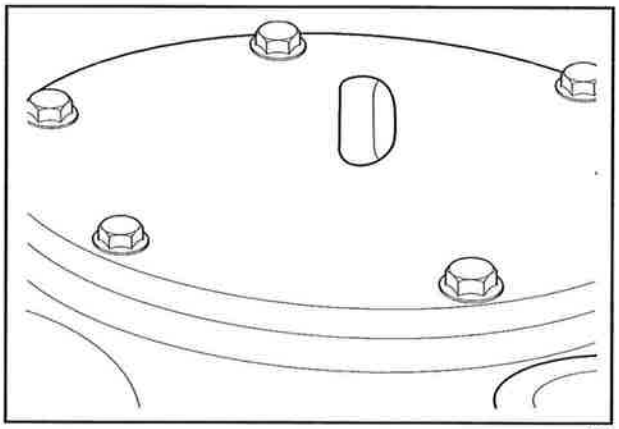

57

CHOPPER SYSTEM

DESCRIPTION

Rotary Cutting System

This cutting system is composed of two drums with inverted rotation, assembled with the appropriate cutting knives.

Each knife is adjusted on the chopper drum by seven bolts and a protective bar.

The drums are hydraulic driven by two separated orbital motors, synchronized by the gears.

A flywheel, driven by the chopper upper gear and spinning on an independent shaft, supplies the additional inertia to balance the system.

In case of chopper drum gripping, the flywheel is equipped with a safety clutch to protect the gear from overloads.

Assembly maintenance

The chopper mechanism can be repaired without the need of removing the gearbox from the main chassis.

However, the gearbox must be removed from the chassis for repairs, as it needs to be re-aligned.

CAUTION DURING DISASSEMBLY

- *Remove the hub, apply new grease and replace the seals.*
- *Check the bearings and replace them as necessary.*
- *Check the condition of gears and pinion and change their position, according to the contact among the teeth.*
- *Check the chopper knives lock nuts for their condition and replace them as necessary.*

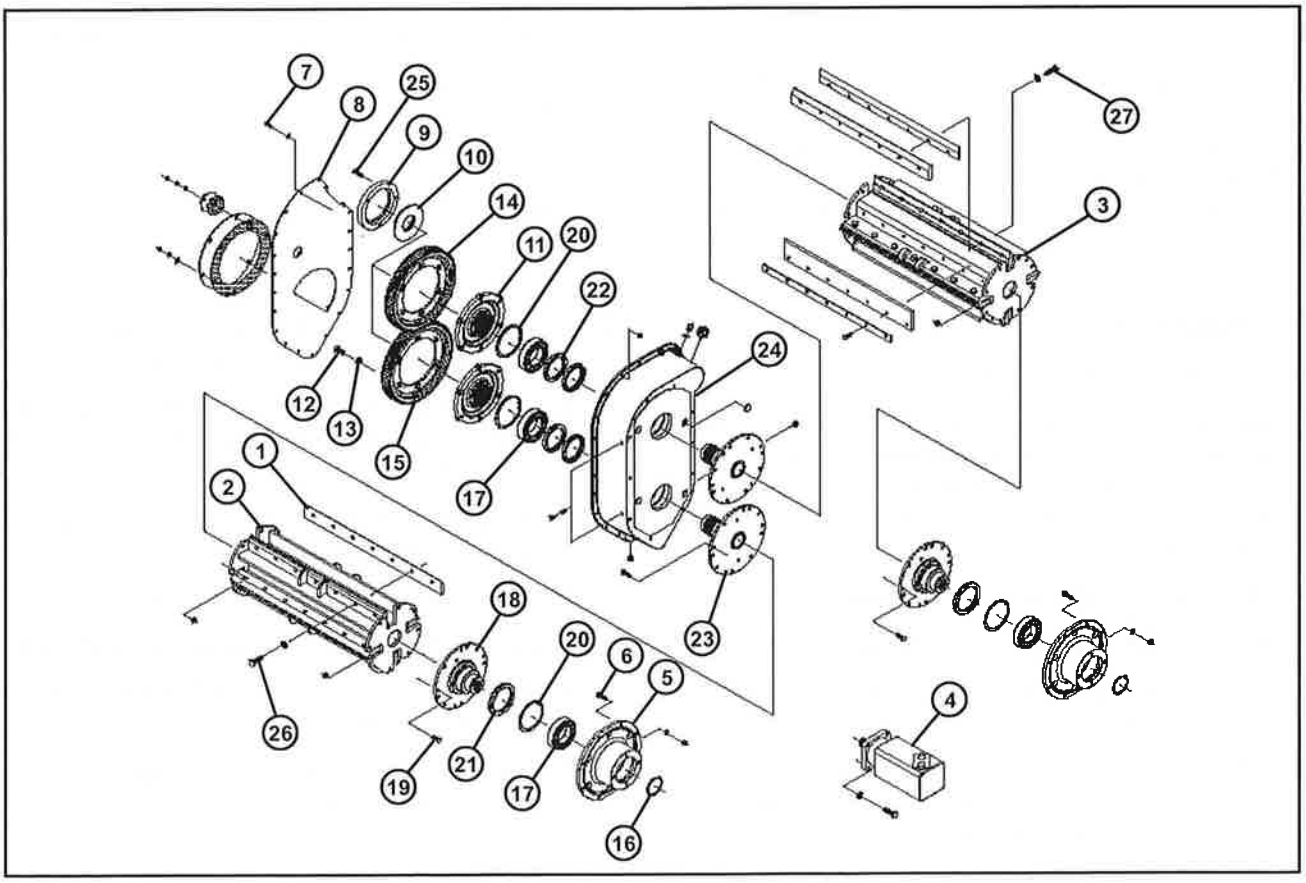

1

1 - Mounting bars
2, 3 - Chopper drums
4 - Hydraulic motor
5 - Bearing housing
6 - Bolt
7 - BOlt
8 - Cover
9 - Mounting lock
10 - Nut
11 - Hub
12 - Bolt
13 - Washer
14, 15 - Gears
16 - Snap Ring
17 - Bearing
18 - Flange
19 - Bolt
20 - Snap ring
21 - Seal
22 - Seal
23 - Flange
24 - Box
25 - Bolt
26 - Bolt
27 - Bolt

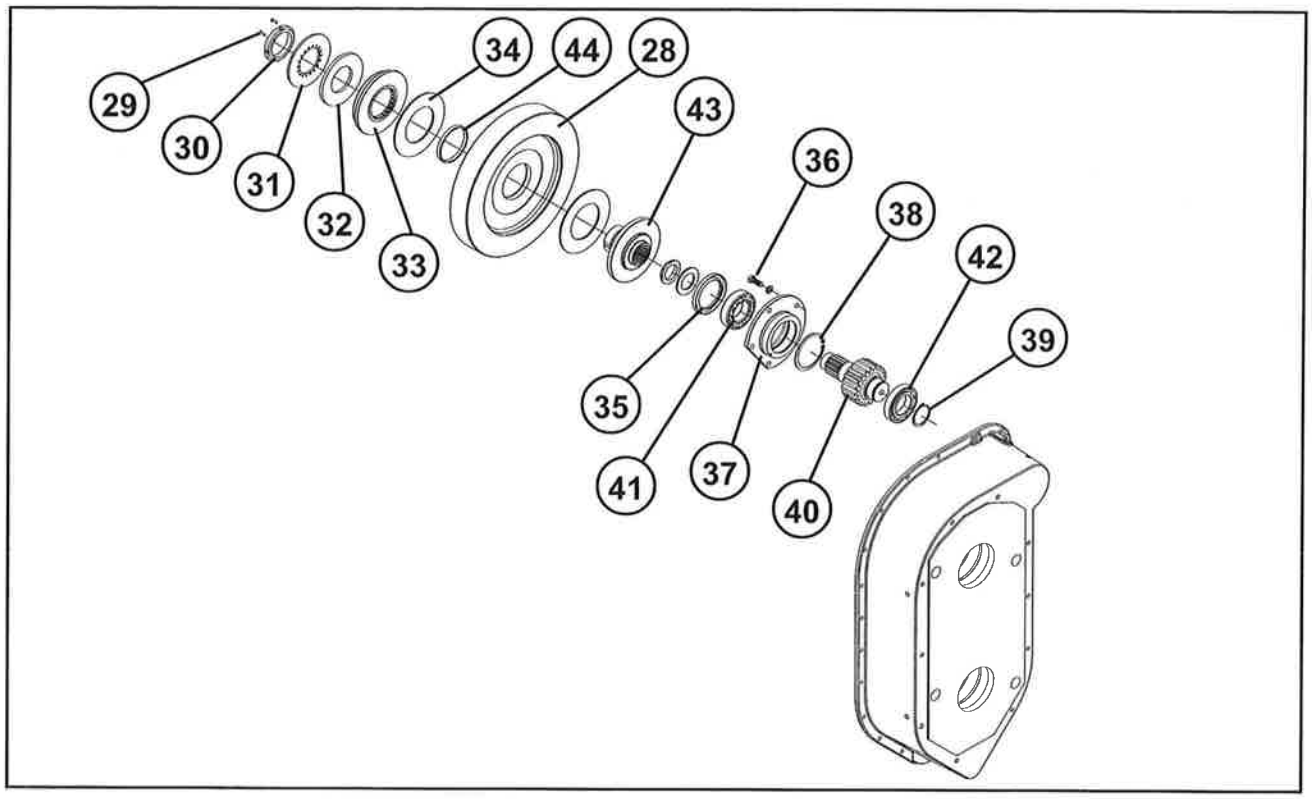

1a

28 - Flywheel
29 - BOlt
30 - Lock nut
31 - Lock washer
32 - Spring washer
33 - Housing
34 - Disc
35 - Seal
36 - Bolt
37 - Bearing housing
38, 39 - Rings
40 - Pinion
41, 42 - Bearings
43 - Adapter
44 - Bushing

DISASSEMBLY

1. Drain the oil from the gearbox.
2. Remove the knives mounting bars (1) from the chopper drums (2, 3). This procedure is necessary for safety reasons and to allow the removal of the drums thru the opening on the sidewalls on the machine chassis.
3. Disconnect the hoses from the motors.

   Close and plug the chopper's hydraulic lines ports.
4. Remove the hydraulic motors (4) from the bearing housings (5).
5. Loose and remove the most part of the motor bearing housing mounting bolts (6) on the sidewall. This procedure is necessary to support the drums.
6. To remove the flywheel from the chopper (28), remove the mounting bolt (29), install the special tool P/N D0337 on the pinion and turn it, releasing the lock nut (30).
7. Remove the lock washer (31), the cupped spring washer (32), the housing (33) and the disc (34).
8. Remove the flywheel (28), which will remove the second clutch disc (34) and the seal (35).
9. The pinion/flywheel assembly can be removed, by loosing the six bolts (36) fastening the bearing (37) to the gearbox.
10. Remove the snap rings (38, 39) from both ends on the pinion (40).
11. Remove the bearings (41, 42) from the pinion.

    These must be kept for checking and re-assembly.

    NOTE: *To remove the inner bearing, both gears in the chopper must be removed.*
12. To remove the cover from the chopper gearbox, remove the mounting bolts (7) and pull out the cover (8).
13. Before removing the gears, remove the mounting lock (9) and nuts (10) fastening the clutch hub (11), because these gears must be locked to prevent them to rotate.
14. Remove the bolts (12) and washers (13) from the hubs (11) and remove the gears (14, 15).

15. To remove the hub from the clutch, position an extractor using the holes on the bolts of the gears assembly.

    NOTE: *The clutch hub is installed with Araldite. If necessary, apply heat to disassemble it.*

16. To remove the two chopper drums (2, 3), remove the snap ring (16) from the bearing (17) at the end of the motor shaft.

17. Before removing the drive motors, support the chopper drums and lock them with wood blocks and then remove the hub (5) and the flange from the motor (18).

18. Now the choppers drums can be removed, one at a time, thru the opening on the left side of the chassis.

19. Remove the sealing and the bearings from the motor and from the gearbox, after releasing the snap rings. Use the special tool P/N D0382 to pull out the bearings (17).

20. After removing the chopper drums components, check them for the need of repair or replacement. Check and clean all components being prepared for the assembly. Replace parts as needed.

ASSEMBLY

Before the assembly, check if all components are in operational condition.

Check the bearings condition and, if there is any doubt, replace them. Clean all components and replace all seals.

1. If the chopper drum and the knives have been disassembled, re-assemble them using Araldite and torque the flange (19) bolts (18) to 150 N.m.
2. Install the chopper gearbox, positioning the shaft hubs (11) with the bolts holes for alignment. Mark the shaft and the hub for a later assembly and then remove the hub.
3. Before installing the snap ring (20), lube the bearing (17) with grease and adjust it on the drive motor assembly.
4. Install the grease seal (21) on the hub (5).
5. Assemble the seal (22) with the lip facing out, using the special tool P/N D0383 to avoid the contamination of foreign material in the bearings. Install the second seal, with the lip facing inward to keep the oil inside the gearbox; to install this seal use special tool D0385.

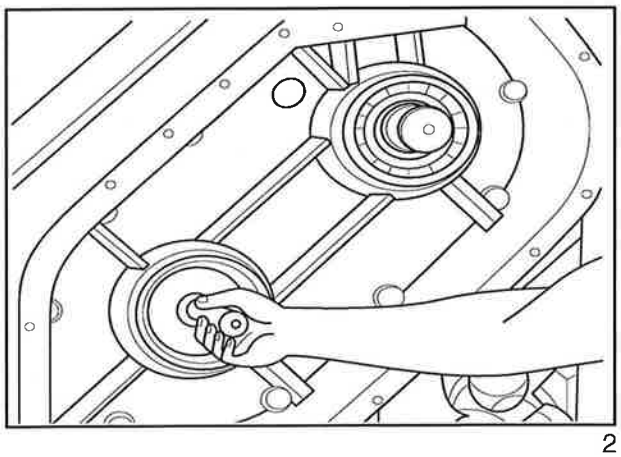

2

6. The two seals must be assembled so that the lubrication hole be located between them. Apply grease between the two seals.
7. Install the flanges (23) on the gearbox (24). If the chopper gearbox is assembled on the harvester's chassis, place the bearings (17) on the flanges shafts (23) to align them (do not tap the bearing to the end).
8. Install the upper and lower drums and install the drums fastening bolts, applying 24-hour Araldite.
9. Assemble the motor hub assembly (5), installing the bearing first (17), then the snap ring (20) and the seal with its lip facing outward, using the special tool D0387.
10. Place the hub assembly (5) on the flange (18); for this procedure use a shop press, locking this new assembly with the snap ring (16).
11. Install the above mounted assembly on the harvester chassis, without tighten the mounting bolts to their final torque. Install the bolts (19) with Loctite 271 or 277 to finish the drum assembly.
12. With the drums positioned and using the special tool D0384, tap the flange (17) bearing (23) until the end, as shown in following figure. Install snap ring (20).

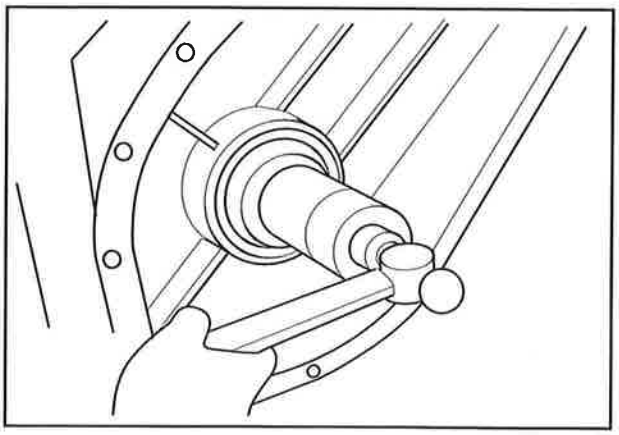

3

13. Install the hub (11), applying 24-hour Araldite on its spline, as described on page 10. If there is an excess of Araldite, use it to install the nut; if not, apply Araldite on the threads to assemble the nut (10). To torque this nut, use the special tool P/N 87254891. Required torque: 560 N.m.
14. Install the lock (9), fastening it with the bolt (25) and apply Loctite 277.
15. Apply Loctite on the bearing outer cup (42) and install it on the chopper gearbox, using the special tool P/N D0366.
16. Place the chopper upper gear (14) on the gear hub (11) and install the gear mounting bolts (26) (without tightening them to the end) using Loctite 262. Torque the bolts to 300 - 350 N.m.

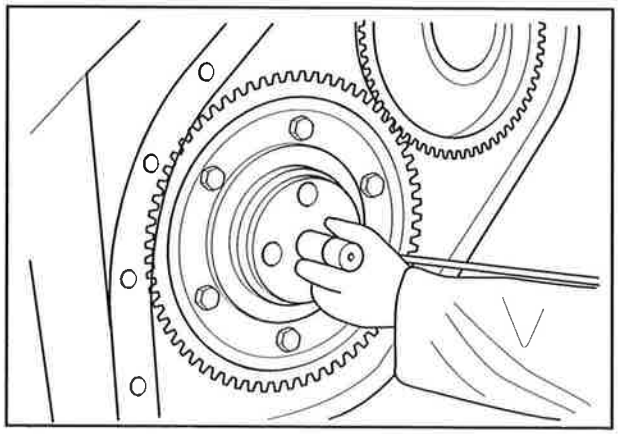

4

17. Place the lower gear (15) on its position, as defined by the positioning of the mounting hole in the center of the opening, for the final adjustment of the knives. Tighten the bolts just enough to keep the gear on its position. Make the final adjustment for the knives on their position.

18. The chopper drums are not yet totally fastened, and must be positioned parallel to each other. Using a dial indicator with magnetic base, check the alignment between the drums, according to the following procedure:

    a. Install the dial indicator between the drums, beside the chopper's gearbox.

    b. Apply a 5 mm load.

    c. Set the dial indicator to zero.

    d. On this position, move the dial indicator to the other end of the drums.

    e. Check the reading on the dial indicator, which cannot exceed 0.25 mm.

    In case the dial indicator indicates a larger value, follow the procedure bellow:

    f. Install spacers on the hub (5). The spacers must be set so that the drums reach a parallelism within the specification.

    After reaching the specification, go to the next step.

19. Apply Loctite 271 on the bolts (6) of the hub (5), fastening them to the machine chassis.

20. Install the knives on the drums, tightening the bolts (27) on the nut (1).

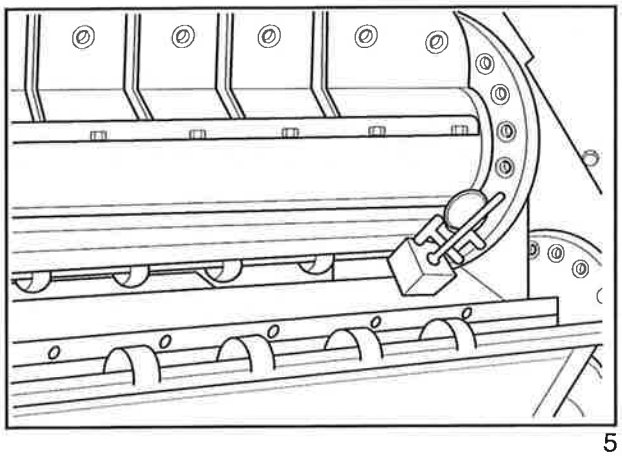

5

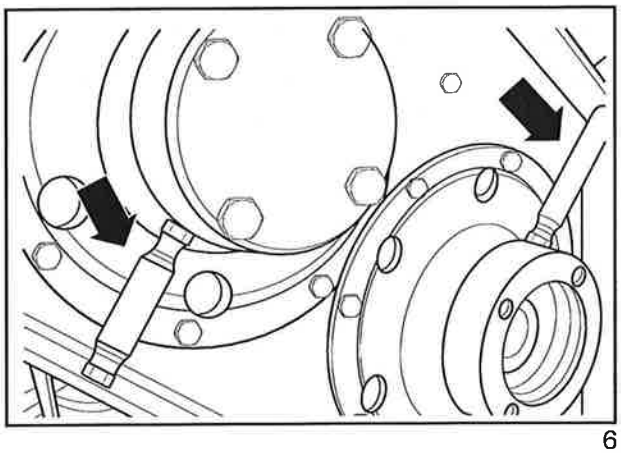

6

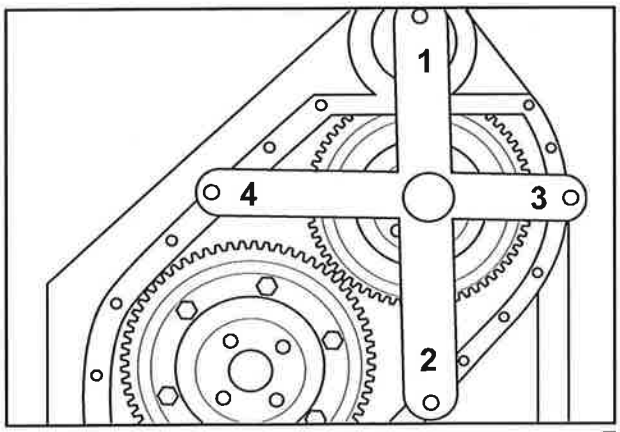

7

Knife Timing

1. Remove the lower gear and position the drum knives so that they present a chamfer-to-chamfer contact.

   Re-install the lower gear (15), installing its bolts on the center of the oblong holes, applying Loctite 271 and torque them to 300 N.m.

Gearbox alignment

1. Install the special tool P/N D0296.

2. Use a depth gauge and check the reading on positions 1 and 2 and then on positions 3 and 4; the maximum difference among the measures must not exceed 0.20 mm. If the readings show a difference larger than the maximum allowed, proceed as described bellow:

   a. Loose the bolts fastening the gearbox to the machine chassis.

   b. Install spacers where the lowest reading was measured, aiming to rise it to reach the specified difference.

   c. Place shims on the rear part of the gearbox and retighten its mounting bolts. The shim's maximum thickness is 3 mm.

Pinion Assembly

1. Install the inner bearing (42) on the pinion (40) and install the snap ring (39).
2. Now, by using the special tool P/N D0364, install the outer bearing (41) onto the pinion's bearing housing (37) and install the snap ring (38).
3. By using the special tool P/N D0365, install the seal (35) on the pinion's bearing housing (37) and install the bearing on the pinion.
4. Install the pinion assembly inside the gearbox (sealing it with "Ultra Blue") and fasten with the bolts (36).

   NOTE: *The housing fits in one position only, in order to allow the gearbox cover to be fitted. In this step, the gearbox alignment can be inspected; this is necessary if the gearbox has been removed from the chassis or if there are signs of misalignment.*

Chopper Gears Backlash and Alignment

Check the alignment between the timing upper gear and the pinion, following the procedures described bellow.

1. Cut a piece of weld wire and bend it.
2. Place the weld wire (Position 1)
3. Turn the gear on the direction indicated on the figure.

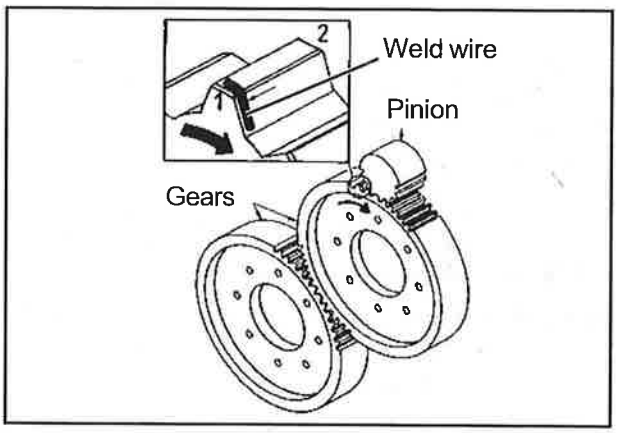

8

4. Remove the wire after passing the gear and measure its thickness with a micrometer. Write down the reading.
5. Repeat the procedure described above for the wire placed on (Position 2).
6. Turn the upper gear 180° and repeat the procedure described above.
7. The backlash between the gears must be within 0.13 – 0.30 mm.
8. The maximum alignment distance for the gears (Positions 1 and 2) is 0.30 mm.

   If the backlash difference between the upper gear and the pinion o the positions at 180° exceeds 0.30 mm, it will be necessary to remove the upper gear and change the mounting position for the hub. Repeat this procedure until it obtains the correct backlash.

   Check the allowance again and, if it is correct, apply a point of weld on the spacers, fastening them to the sidewall.

   NOTE: *Apply Loctite 262 on the gearbox mounting bolts. Check if the bolts are black and not bichromatized. Cadmized bolts cannot be used.*

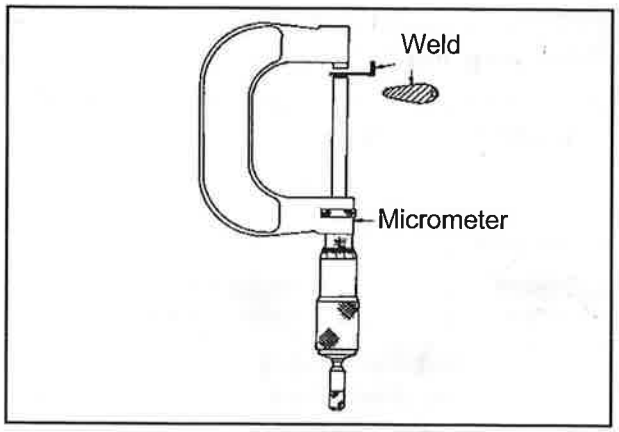

9

Hub Assembly

1. Adjust the cover (8) on the gearbox (use sealing on the matching surface). Do not adjust the lower small cover before the final adjustment for the knives.
2. Assemble the spacers (43) on the spline, making sure that the excess of Araldite does not get into the pinion seal (35) and into the bearing to avoid damages. Torque the nut to 270 N.m.
3. Place the clutch disc (34) over the flywheel adapter.
4. Install the bushing (44) on the flywheel (28) and then install the flywheel on the adapter (43).
5. Install the second disc (34), the flange (33), the cupped spring washer (32), the lock washer (31) and the nut (30), and fast them with the lock bolt (29).
6. Turn the flywheel nut manually until you feel it has seated on the cupped spring washer.
7. After the flywheel nut touches the cupped spring washer, screw it in 1/2 turn, using the special tool P/N D0337.

   NOTE: *This is an initial adjustment; it may be necessary to increase or decrease the torque to meet the operational condition and keep the optimum efficiency for the gears.*
8. The chopper knives must be installed and adjusted.
9. Apply a coat of grease on the chopper shaft seal and plug the grease lines.
10. Assemble the lower cover and fill with lubricating oil until reaching correct level.

    NOTE: *For the maximum working life of the gear set, change the position of the gears after each 2,500 hours.*

Chopper Synchronized Cutting Blades

Check the blades for the correct thickness and inspect them for the correct fastening on their position.

Turn the flywheel to rotate the chopper drums and apply ink (blue mark) on both assemblies of blades on the bottom drum.

The top blades should mark the bottom blades along the full width of the drum.

If the bottom blades are not marked, remove the small inspection cover from the gearbox, slight turn the gear on the clockwise direction, tighten the two opposite bolts and turn the flywheel slowly to check the contact among the blades.

The correct adjustment is obtained when the final mark on the two blades of the lower drum and the chopping action do not have any interference.

NOTE: *Due to manufacturing allowance, it may not be possible to reach the total value for the whole blades length.*

After reaching the correct adjustment , apply Loctite on the gears bolts and torque them to 300 N.m.

Use the same procedure for the upper gear.

Check the correct alignment once again, re-install the cover and check the oil level.

Additional Inspection Cover

When it's necessary to check or adjust the timing upper gear, remove the small inspection cover from the gearbox.

The upper gear must be moved to its final position on clockwise direction, placed against the bolts, according to the standard.

ELEVATOR SLEW

DESCRIPTION

The elevator slew mechanism is composed of two opposite rollers fastened to the main chassis and to the elevator table by direct connecting arms. The two cylinders operate on the push/pull direction and turn the cradle 160°.

The swing assembly is fastened to the main chassis by two pivot pins and locked by snap rings.

DISASSEMBLY

Slew Table Removal

1. Remove the elevator from the machine
2. Remove the snap rings from the slew cylinders pins and remove the pivot pins. Move the slew cylinders to one side to gain enough room to reach the rings of the main pivot pins.
3. Remove the snap rings from the pivot pins, support the slew table and remove the pivot pins.
4. Remove the slew table from the harvester.

CAUTION DURING DISASSEMBLY

- *Check pins and bushing condition and replace them as necessary.*
- *Check the slew table condition and replace it as necessary.*
- *Check pins snap rings and replace them as necessary.*

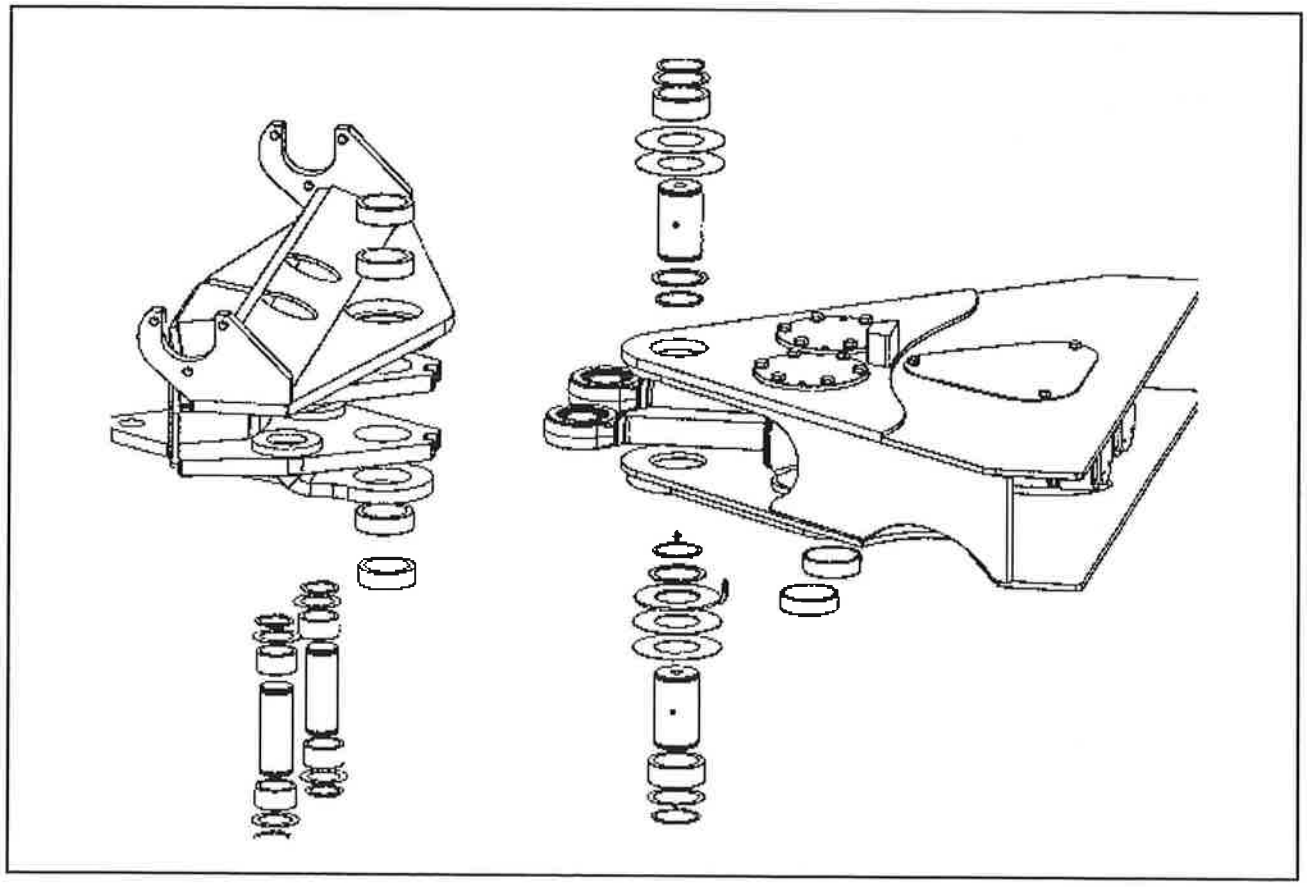

1

ASSEMBLY

1. Cylinder preparation

Assemble the grease nipples (1) on the cylinder's four parts, two for each cylinder and install the straight grease nipple (2) on the two part cylinder rod head, one for each cylinder.

1.1. Install the 90° grease nipple, positioning the greasing tip upward (rod direction).

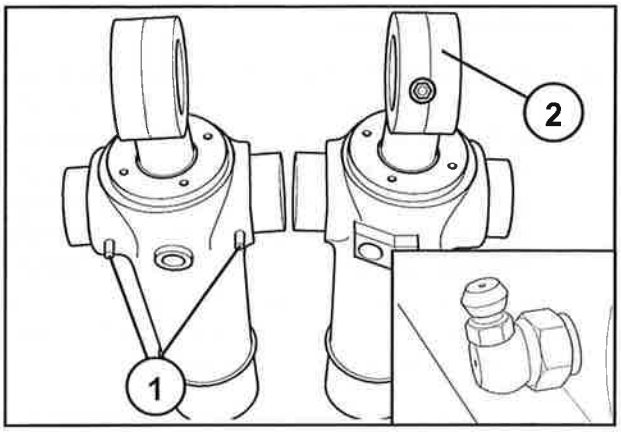

2

2. Installing the cylinder on the chassis

2.1. Place the two cylinders on the chassis so that the 90° grease nipples stay on the outer side of the chassis.

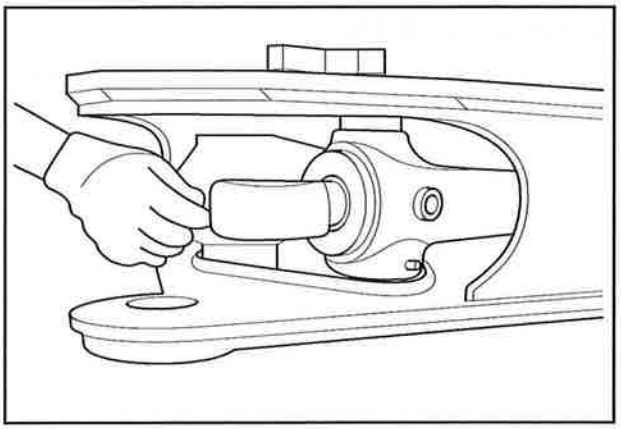

3

3. Installing the elbows on the cylinders

3.1. Assemble four elbow parts on the upper side of the cylinder, two parts on each cylinder, fastening them and positioning them to the hose fitting.

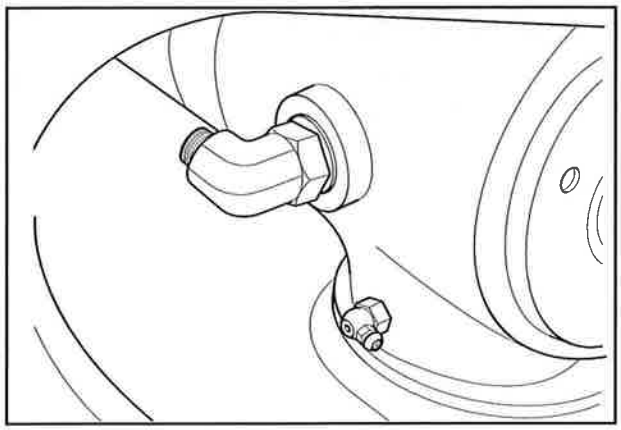

4

4. Installing the nipple with reduction

4.1. Assemble two nipple parts on the lower side of each cylinder. Apply Loctite 570.

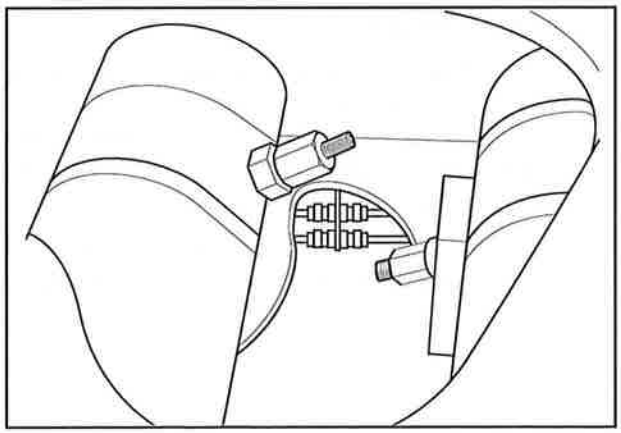

5

5. Installing the hoses

5.1. Position the 90° side of the hose on the lower side of the left side (1) and right side (2) cylinders and connect the nipple; connect straight side of the hose on the cylinders upper side, connecting one cylinder with the other, i.e., the left cylinder lower side connected to the right cylinder upper side, and the right side cylinder lower side connected with the left side cylinder upper side; connect one elbow with the other elbow. Apply Loctite 570.

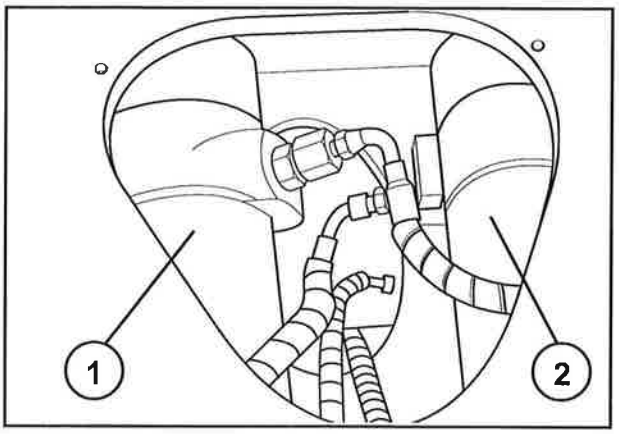

6

6. Flange positioning

6.1. Position the table flange center side with the flange on the chassis to install the shim and the pin washers.

7. Preparation of the pins

7.1. Install the snap rings (1), one washer (2) and the grease nipple (3) on the pins.

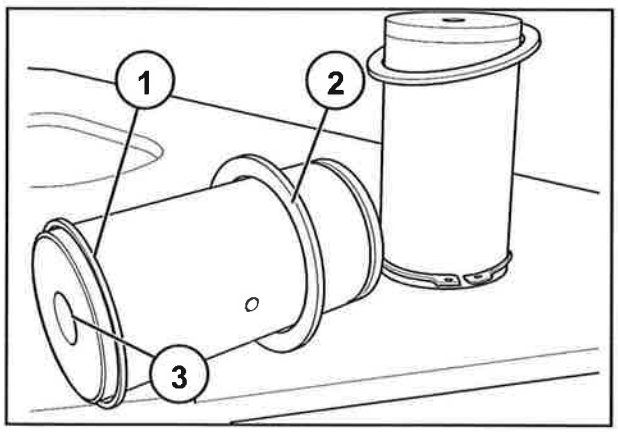

7

8. Installing the pin

8.1. Install the pin (1) to help the vertical assembly, from the bottom to the upper side, placing two shim washers (2), one washer to assemble the pin until it touches the washer and the circlip on the bush.

If a smaller clearance is needed, adjust the assembly by adding or removing washers, as necessary.

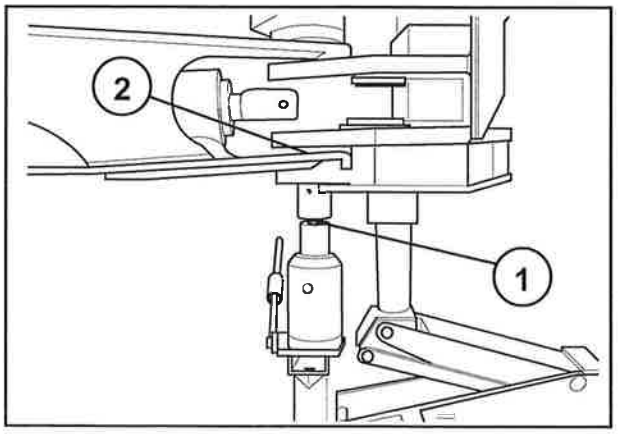

8

8.2. After the pin assembly, it is necessary to lock it with the snap ring and install the shim washer when it is necessary to reduce the clearance between the snap ring and the bush.

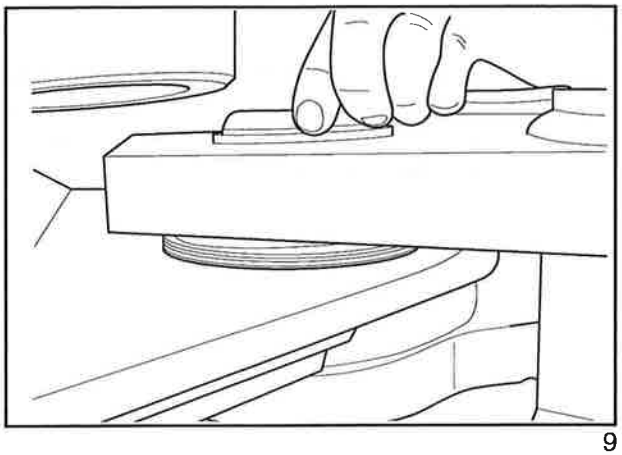

9

9. Installing the shim washer

9.1. Install shim washers on the table flange and on the chassis flange how much is needed to reduce the clearance.

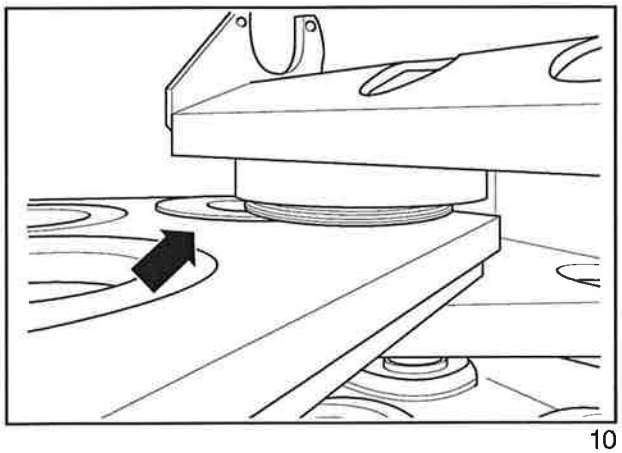

10

9.2. Position the pin with the washer, the circlip and the grease nipple upward.

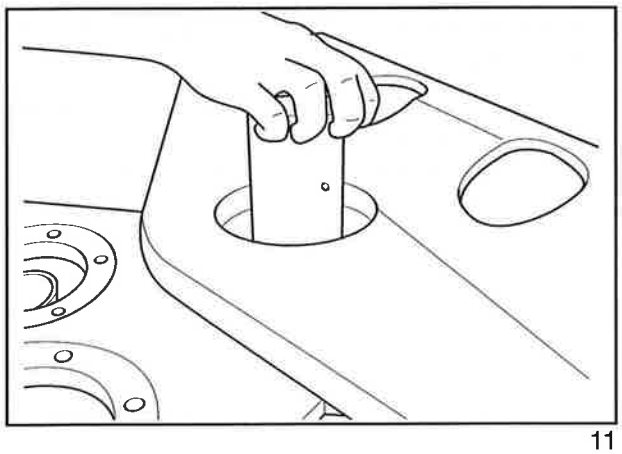

11

9.3. Install the bushes and the shim washer between the flanges, tapping the pin until the circlip and the washer touch the bush.

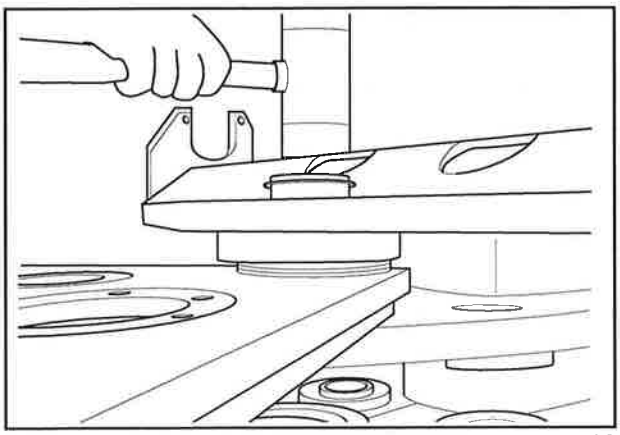

12

10.

10.1. Install the shim washers on the bottom of the pin how much is needed to reduce the clearance; next, install the washer and the circlip to lock the pin.

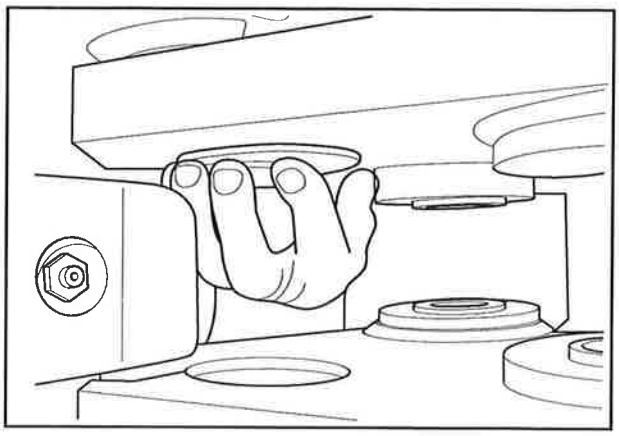

13

11. Preparation of the pins

11.1. Install the three washers and the snap ring, which will be installed from the bottom to the upper side between the bushes and the left side and right side cylinders.

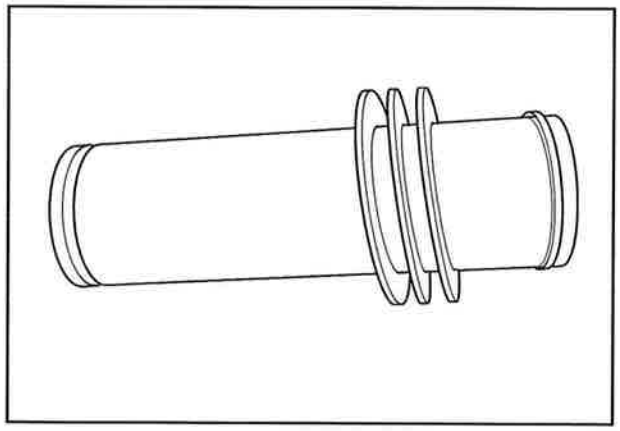

14

12. Installing the pin for the left side and right side cylinders

12.1. With the help of a screw driver (1), position the driver between the slew table and the cylinder swivel and move it until the cylinder rod is opened.

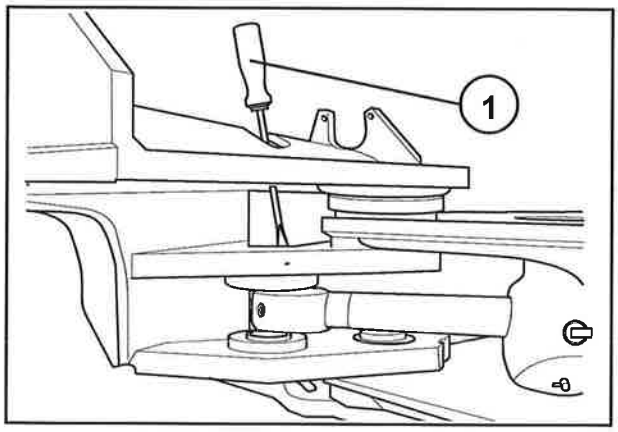

15

12.2. Position the bushing holes on the cylinder swivel so that the previously prepared pin can be installed from the bottom to the upper side.

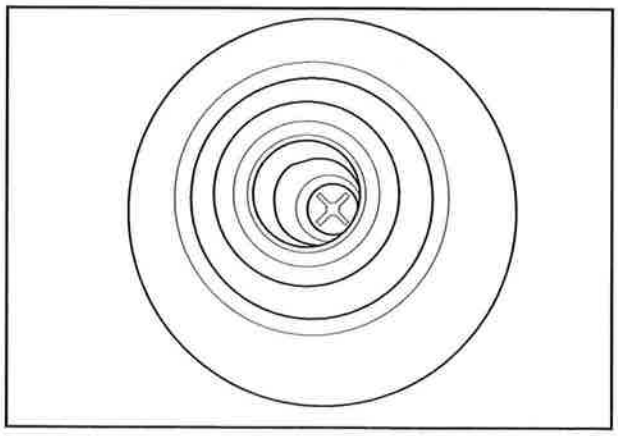

16

12.3. After the visual adjustment between the slew table bushings and the cylinder swivel, install the pin until it touches the three washers and the snap ring on the slew table bushing.

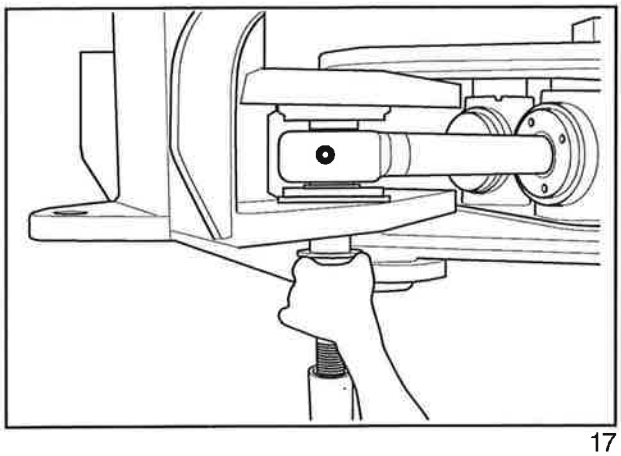

17

12.4. Lock the pin installing two washers (1) and the circlip (2).

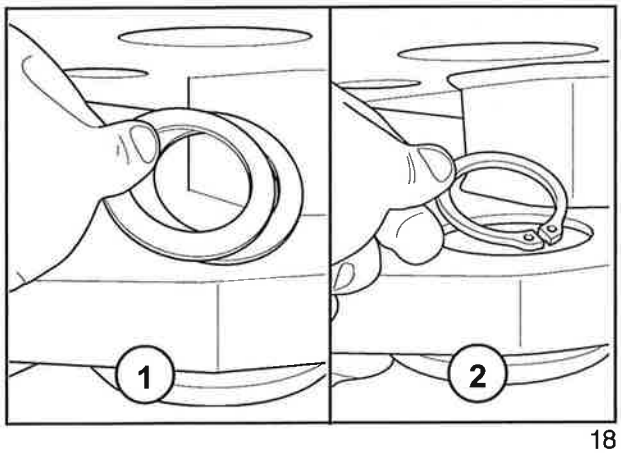

18

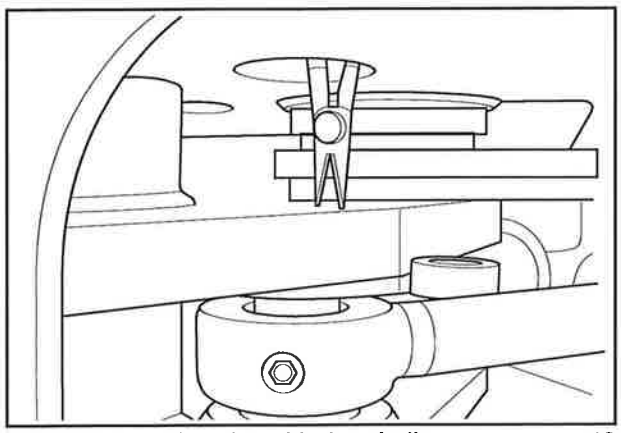

Pliers locking the pint with the circlip 19

13. Bearing assembly

13.1. Position the bearings aligned with the holes so that the bolts can be installed.

NOTE: *Check if the covers mounting surfaces are free of dirt and paint.*

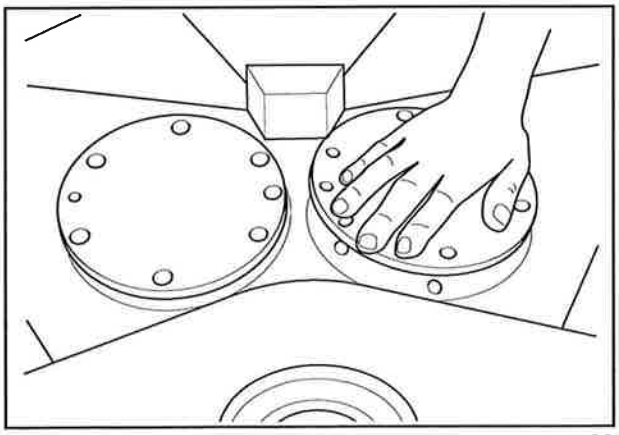

20

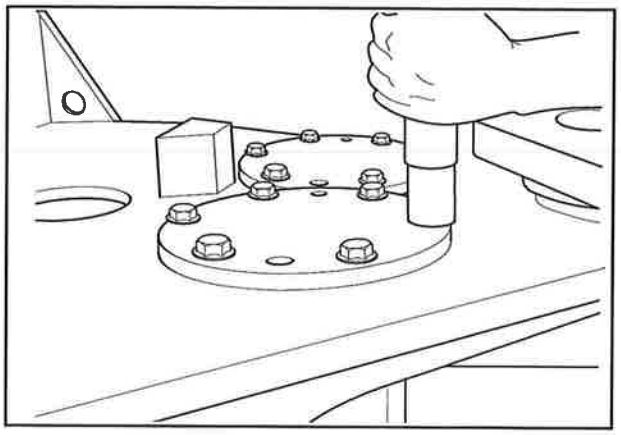

21

14. Cover assembly

14.1. Install the cover and tighten the bolts, plain washers and lock washers.

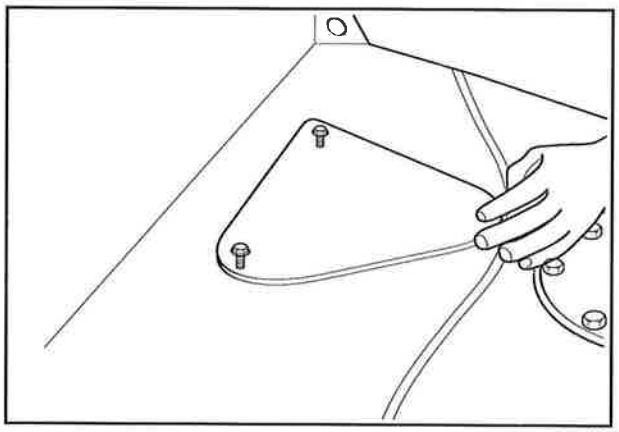

22

ELEVATOR ASSEMBLY

DESCRIPTION

The elevator has an elevated free gap to reduce possible damages from the cane containers which can touch its lower side.

The elevator has an adjustable height, controlled from the cabin by two hydraulic cylinders supporting it, which allows it to be lowered when passing by aerial obstructions and also to minimize the platform height for the extractor and shaft maintenance.

The elevator can turn 160° so the machine can operate with the cutting on one face.

The elevator latching comprises the chains, with equal lengths of 2" and 1-1/2" pitch, connected by screwed slats on the linking.

It is driven by Char-Lynn orbital motors installed on each side; the motors can be reverted to allow the unlocking.

The bearings on the drive shaft are assembled with adjustment to keep the correct chain tension.

The chains are driven by sprockets assembled on the elevator joints to reduce the wear.

The sprocket is fastened by keys on the shaft. The other shaft does not have teeth to allow fluctuation on the chains length .

For the elevator chain adjustment, loose the eight bolts that fasten the bearings and the three bolts that fasten the elevator's adjustable floor.

Remove the nuts from the bolts and turn the adjustable bolts in order to obtain the correct tension. Both chains must be equally adjusted so that the front and the rear shafts are parallel. The correct tension allows a slack of 25 mm (1") on the most tensioned part of the chain, as measured on the opened section on the elevator lower side.

When the tension is correct, re-tighten the adjusting bolts and nuts and re-tighten all other bolts and nuts.

There are replaceable wear slats screwed on the chain rollers.

When these slats are excessively worn, they must be replaced by new ones.

When replacing the slats, replace also the bolts.

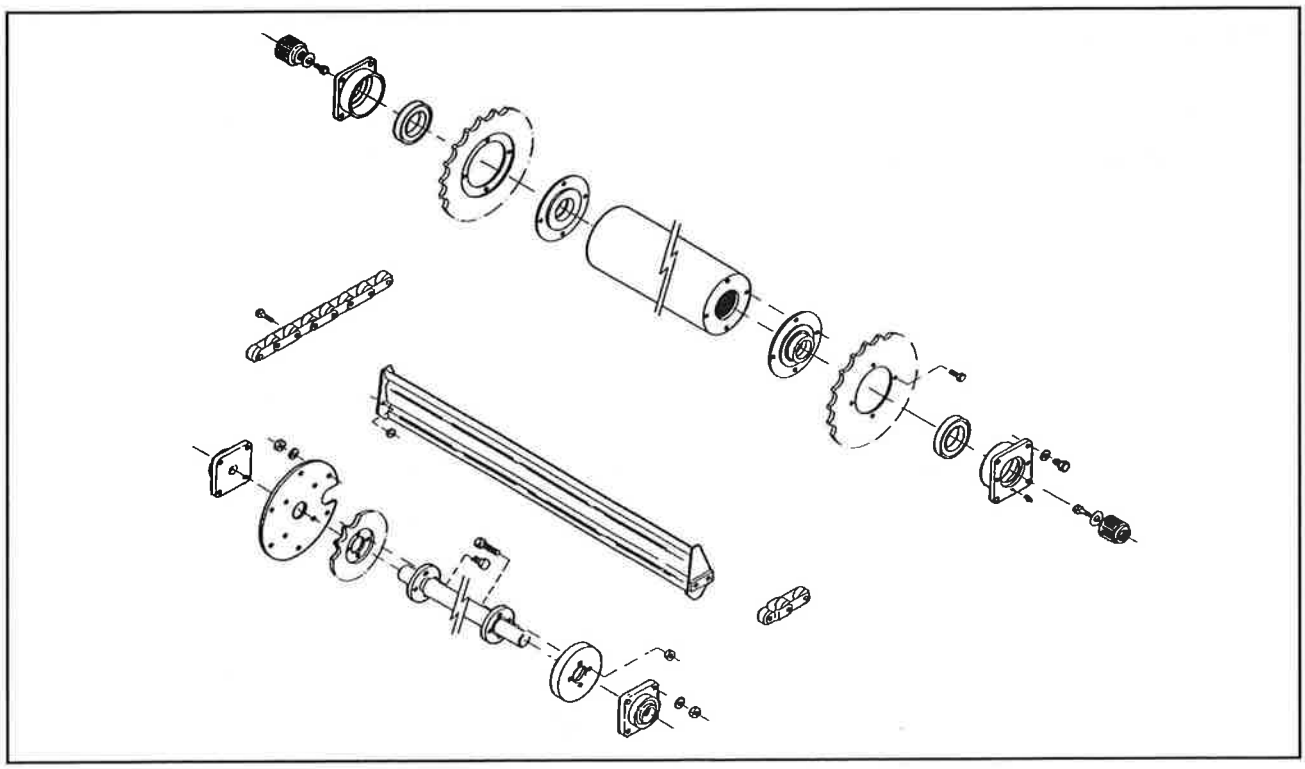

1

DISASSEMBLY

Assembly is in the reverse order of disassembly.

CAUTION DURING DISASSEMBLY

- *Check the bearings condition and replace them as necessary.*
- *Check the chains for an excessive clearance between the rollers and replace them as necessary.*
- *Check the slats for wear and bending and replace them as necessary.*
- *Check the gears, trails, floor condition and replace them as necessary.*
- *Check the secondary extractor structure and hood and repair them if necessary.*
- *Check the elevator slew stop condition.*

ASSEMBLY

1. Wear bars assembly

1.1. Prepare 6 nuts, applying Loctite on washers to help the assembly on positions hard to reach.

NOTE: *Be careful to not apply Loctite on the threads.*

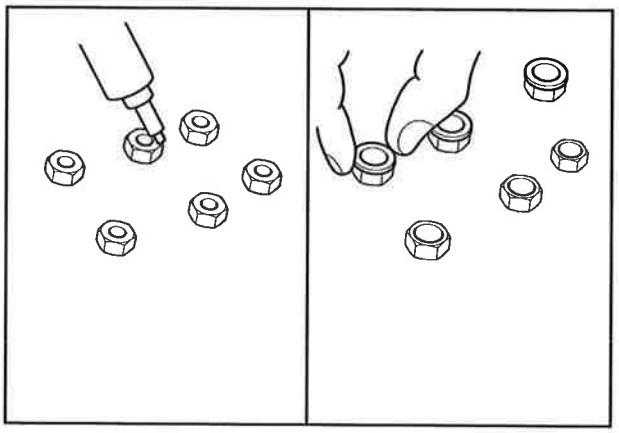

2

1.2. The nuts with washers glued with Loctite will be used as shown on the figure beside.

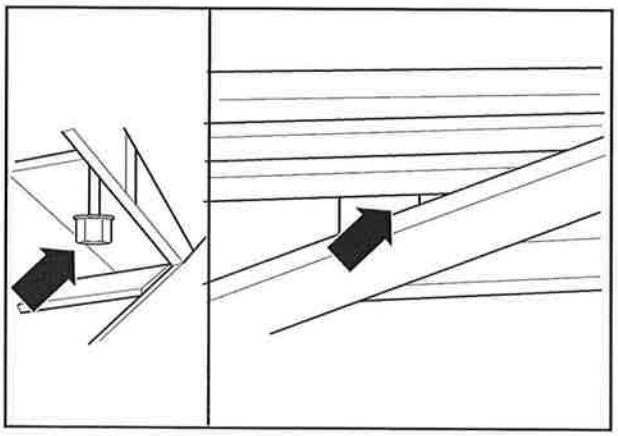

3

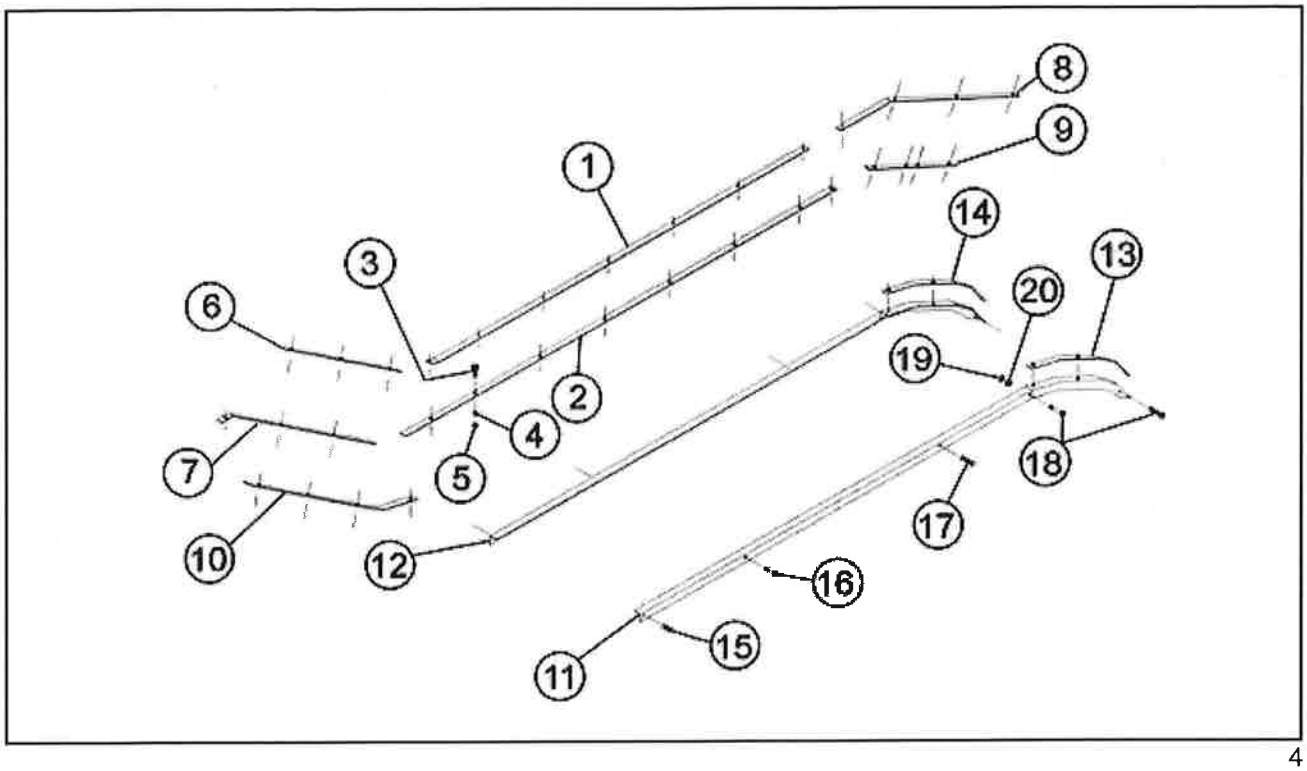

4

1.3. Assemble the wear bars (1) and (2) on both sides of the elevator.

- Assemble the bars (8) and (9) on both sides at the front side of the elevator.
- Install the bars (6).
- Install part (7) on both sides at the rear side of the elevator.
- Install the guides (10) on left and right sides at the front side of the elevator. After fastening it, tap on the curved area to make the bar touch the frame.
- Assemble the wear bar (14) on the support guide (12) (left side).

1.4. Screw in the chain guide on the wear bar.

NOTE: *(1) The wear bar must be flushed with the guide.*

NOTE: (2) The notched side on the bar must be the same side of the notch on the guide.

Note that the end notched in angle must match the end notched on the guide.

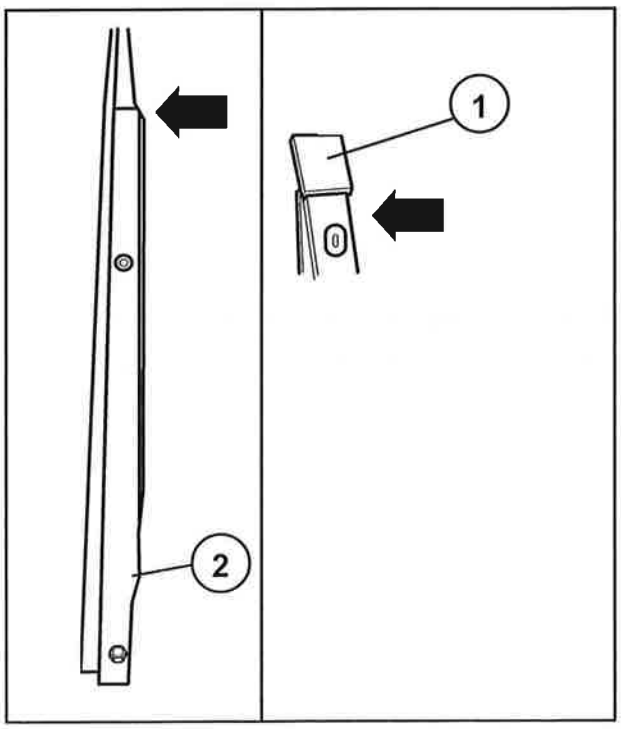

5

1.5. Make the bar touch the guide.

After fastening it, place the assembled guide on the ground and adjust the wear bar on the guide by tapping on the curved area until it touches the guide.

Assemble the wear bar (item 13) on the support guide (item 11) (right side), according to the procedures described for the left side guide assembly.

Assemble the guides on the elevator and fasten them with items 15, 16 and 17.

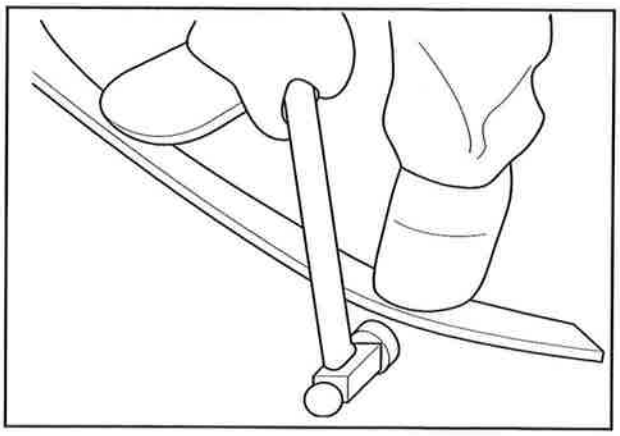

6

2. Chain sprockets assembly

2.1. Install the sprocket and bearing sub-assemblies on the elevator, as shown on the figure beside.

NOTE: *The oblongs on the bearing must be upright.*

2.2. Install the special washer, item 3 (4 per assembly).

2.3. Install the lock, item 2, noting the correct direction according to the rear/front side of the machine.

2.4. Place the lock washers, item 4, and then install the nuts, item 5.

2.5. Install the lock mounting bolts, item 6.

NOTE: *Do not tighten any bolt or nut. These parts must be tightened after the chain assembly.*

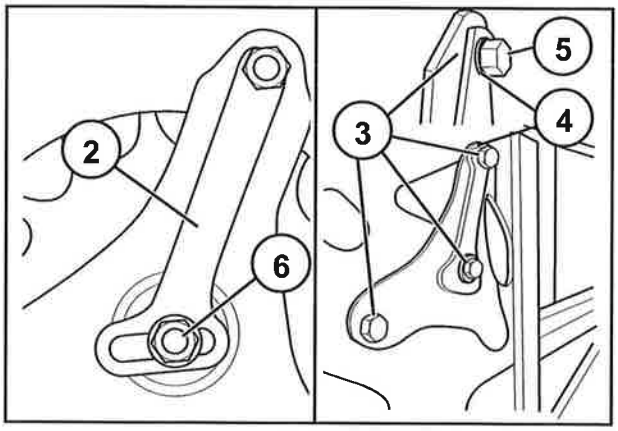

7

3. Assembling the shaft on the elevator

3.1. Insert the shaft by the right side at the front side of the elevator. The gears must be positioned on the right side.

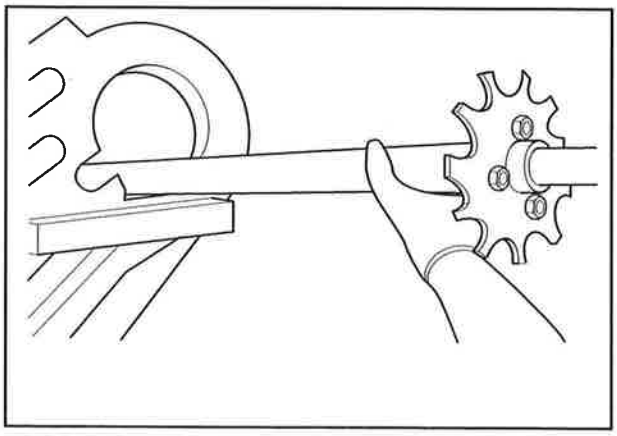

8

3.2. Install the bearing/bearing housing (3) on the shaft left side.

Torque the grease nipple (4).

Fasten it with the nut (5) and the washer (6).

Install the bearing base (2) (right side). Remove the paint protector from the stud bolts.

Fasten it with the nut (5) and the lock washer (6).

Install the bearing/bearing housing (3) on the shaft right side. Torque the grease nipple.

Fasten it with the nut (5) and the washer (6).

NOTE: *Apply Loctite 262 in all bolts.*

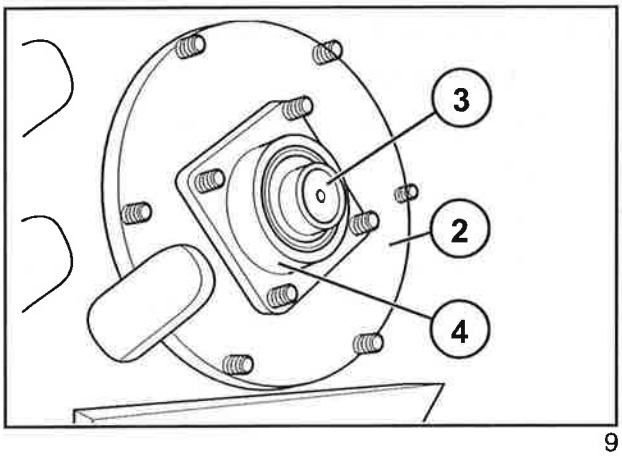

9

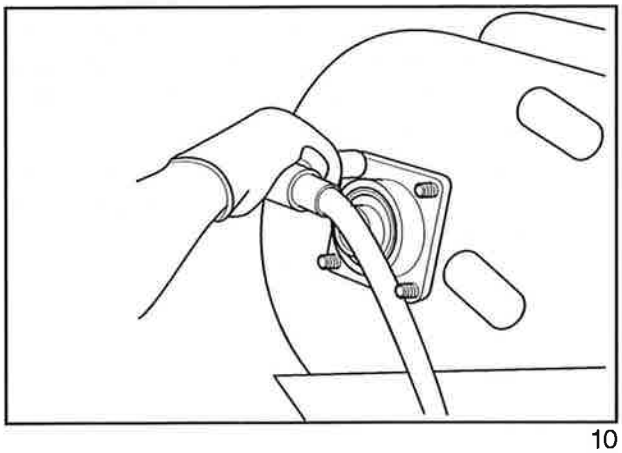
10

4. Assembling the bowl on the elevator

- Fastening the bowl

4.1. Position the bowl and fasten the area of the bowl body with items 2, 3, 4 and 5.

Fasten the bowl sides with items 6, 7, 8 and 9.

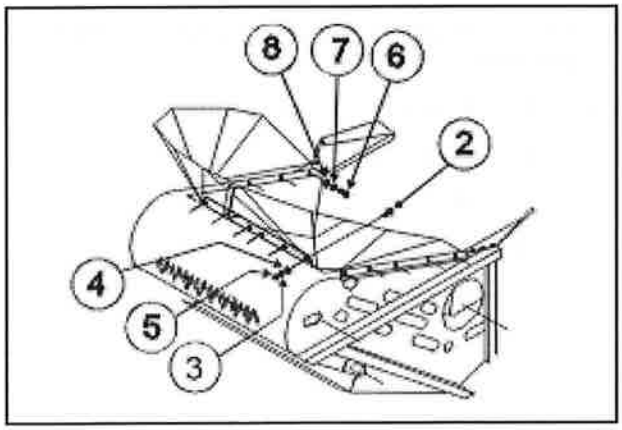

11

5. Assembling the rubber plates

5.1. Place the rubber plate (1) under the bowl and fasten it with the bolts (2), placed at the upper side, and the items 3 and 4, placed at the lower side.

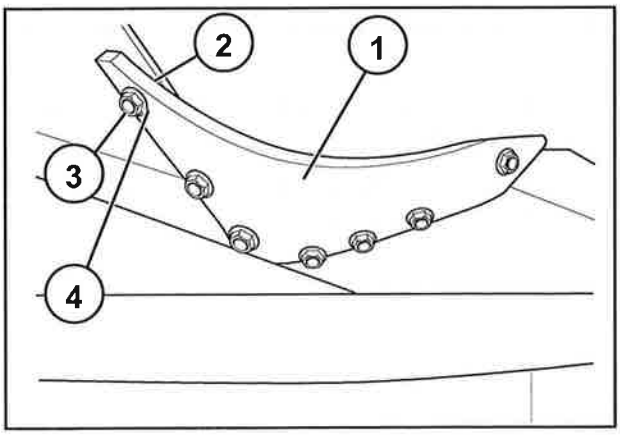

12

6. Assembling of the adjustable floor

1 - (1) adjustable floor

2 - (3) countersunk head Allen bolt

3 - (3) nut

4 - (3) special washer

6.1. Tap on the elevator side plates (RH/LH) outwards to make easier the adjustable floor assembly.

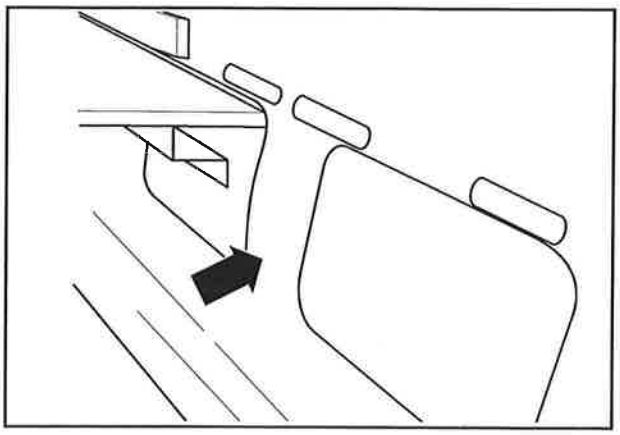

13

6.2. Place the adjustable floor on its position, keeping the alignment with the chassis frame plate. Check the alignment by the oblong holes. Fasten it with items 2, 3 and 4.

NOTE: *Do not tighten the bolts. These bolts must be tightened after assembling the roller and tensioning the chain.*

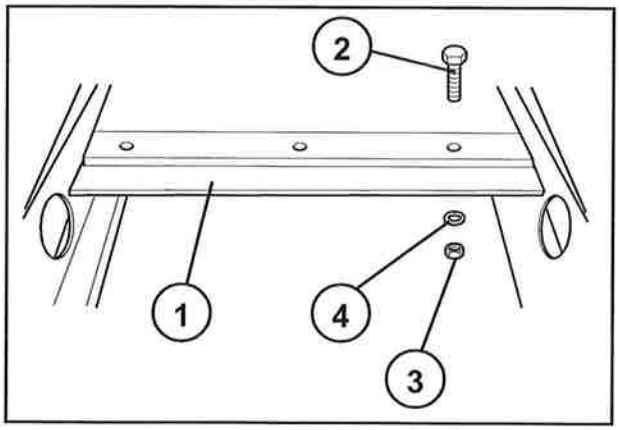

14

7. Roller adjusting plates and tensioners assembly

7.1. Install the adjusting plates:

1 - adjusting plates

2 - bolt

3 - lock washer

4 - plain washer

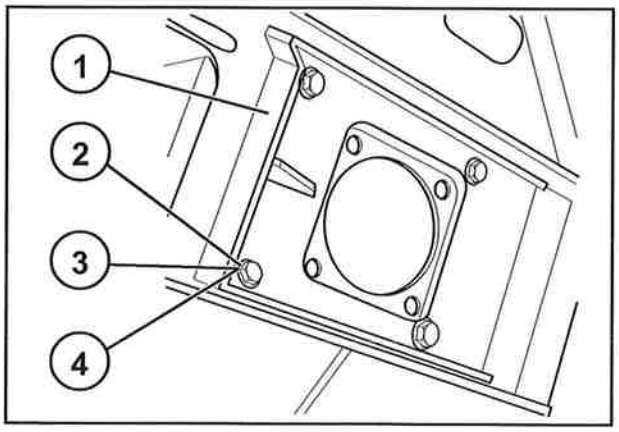

15

7.2. Install a plate (1) on each side of the adjustable floor.

Fasten them on the adjustable floor using items 2, 3 and 4.

Tighten the bolts only after installing and tensioning the chain.

8. Assembling the roller and the bearing housing on the elevator

8.1. Install the bearing housings:

1 - (2) bearing housing

2 - (2) bearing

3 - (2) grease nipple

Place the bearing over the bearing housing and install the bearing using a hammer and a pin until the bearing is properly seated into the housing.

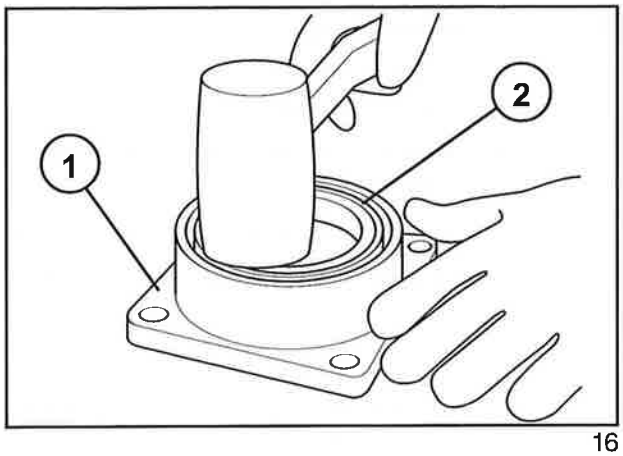

16

8.2. Place the grease nipple (3), so that its tip faces down.

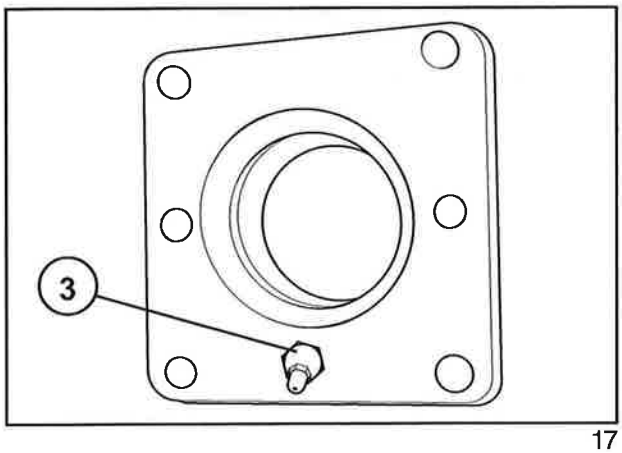

17

9. Assemble the roller on the elevator

1 - roller assembly

2 - bearing and housing assemblies previously assembled

3 - bolt

4 - lock washer

9.1. Place the roller at the bottom of the elevator, aligning it with the hole on the side plate.

9.2. Install the bearing housings with the bearings already assembled on both sides.

9.3. Fasten the bearings on the adjusting plate, using items 3 and 4.

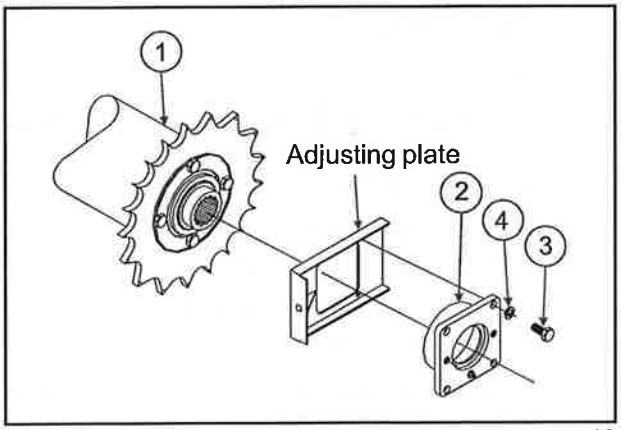

18

10. Tensioners assembly

10.1. Place a nut (7) on the tensioner bolt, item 6, and install it on the reinforcement (1).

The bolt must be installed from the free hole to the welded nut.

10.2. Assemble the reinforcement on the structure.

Fasten it on the chassis frame using items 2, 3, 4 and 5.

NOTE:

1 – The welded bead on the reinforcement must remain on the outer side.

2 – Install the mounting bolts from the bottom to the upper side.

3 – The end of the tensioner bolt must match the recess on the adjusting plat

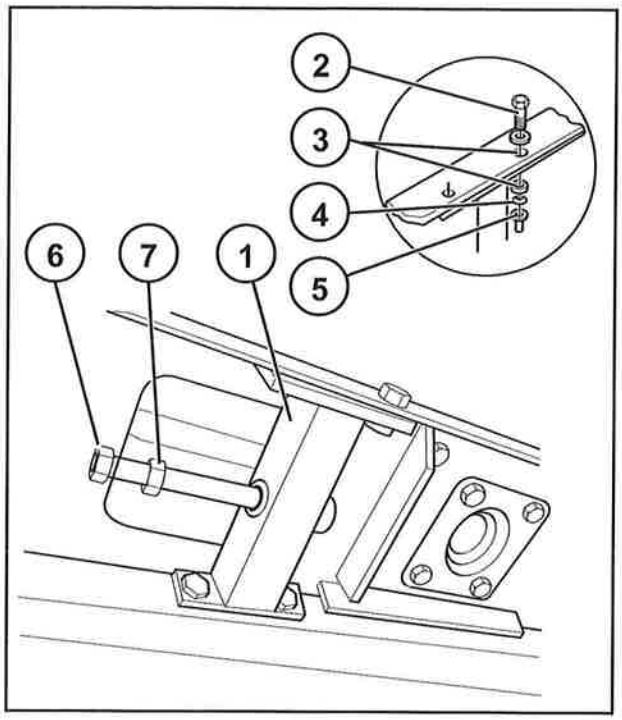

19

11. Chain assembly

Preparation:

11.1. Unfold and stretch the two chains on the ground and check their lengths; the chains must have the same length.

Remove the last link (1) from the two chains, using a pin and a hammer.

With the two chains stretched, place them under the elevator.

Lock the end of both chains on the bar to drive in the chains.

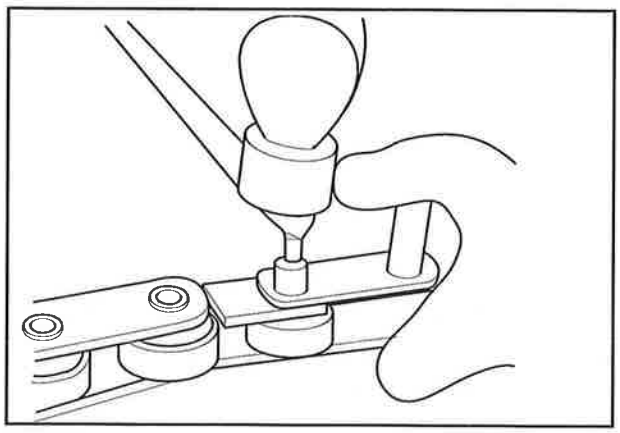

20

11.2. ***NOTE:*** *The first link on both chains must be fitted on the aligned teeth of the two gears on the roller (for reference, take the weld bead on the roller).*

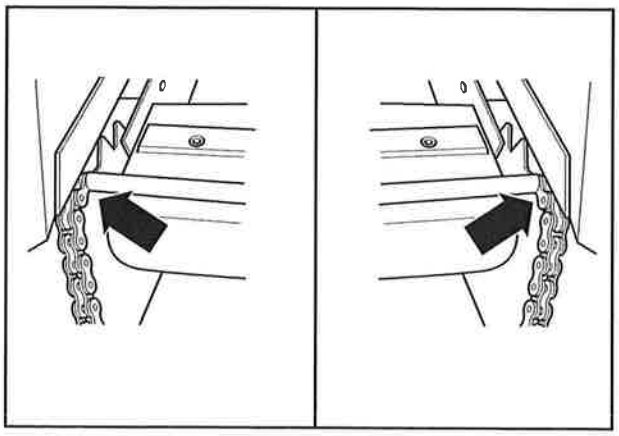

21

11.3. Pull the chain to the other end of the elevator and make the chain return thru the lower guide; pull it until it returns to the initial point, positioning the chains end on the gear.

Next, at the inner part of the elevator, install the link (item 2), joining the two ends of the chains.

Note the correct position of the ends on the gear.

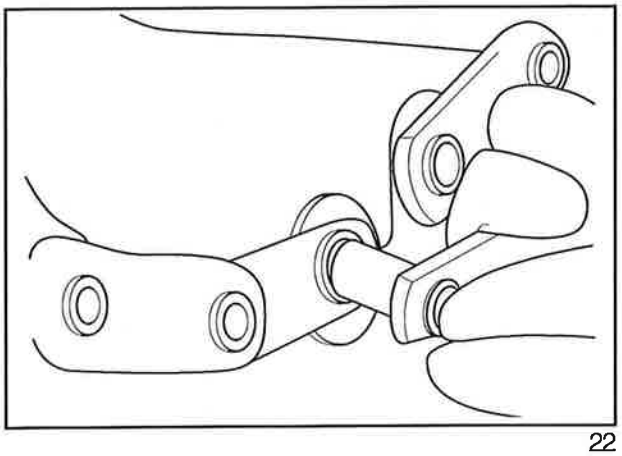

22

11.4. After connecting the two chains, install the crank handle on the roller bearing and turn it until the splice reaches the first opening.

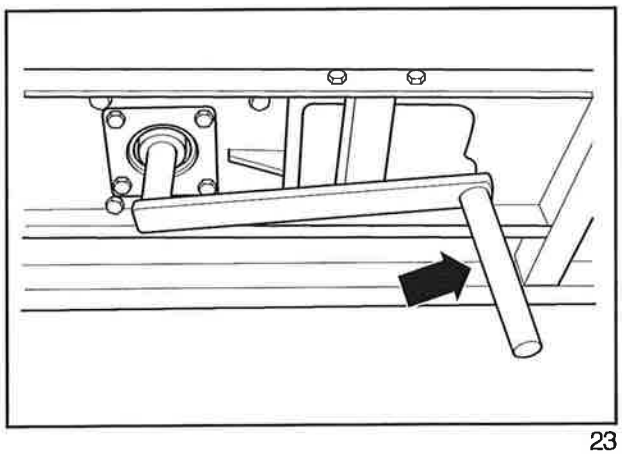

23

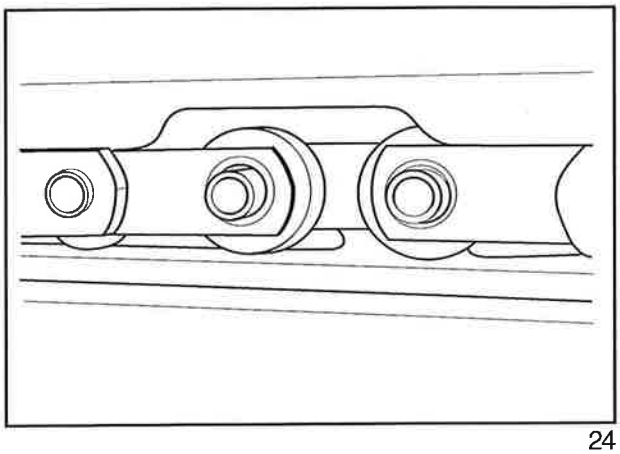

24

11.5. Place the link side plate and reconnect the link.

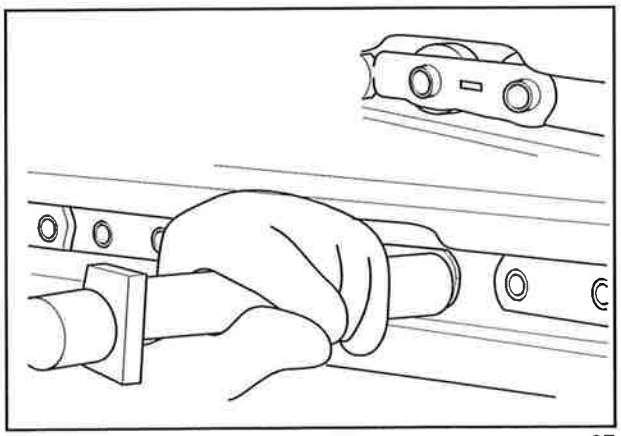

25

12. Slats assembly

Assemble:

12.1. Assemble the first regular slat on the chain splice.

Fasten it with the bolts (4) and (5) and the nuts (6).

NOTE:

1 – The bend on the slats must be facing forward.

2 – Install the bolts inside out.

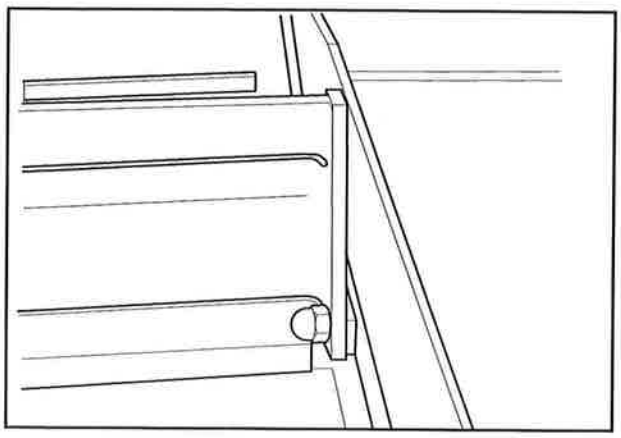

26

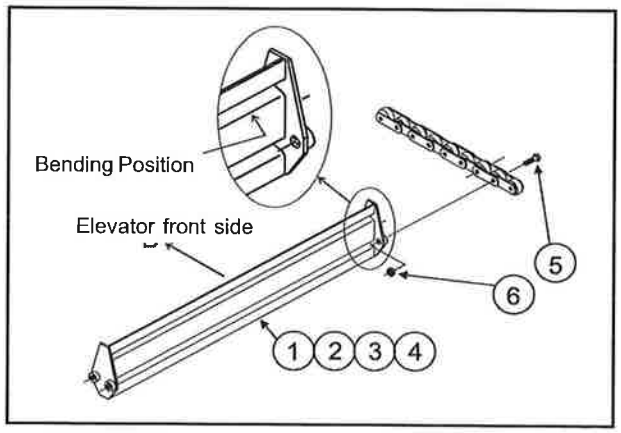

27

12.2. Count 4 links on the chain and assemble the next regular slat on the 5th link.

Install the next 6 slats following the same procedure.

Next, install on the 7th slat: the scraper slat, LH, with weld coat on the slat's left side edge.

Install 6 more regular slats.

Install the 7th slat: central scraper slat, with weld coat on the edge, on the center of the slat.

Install 6 more regular slats.

Install the 7th slat: the scraper slat, RH, with weld coat on the slat's right side edge.

Tighten all slats fastening bolts.

NOTE: *After assembling the last slat, the distance from this slat to the first one is one link smaller, which is normal.*

13. Centralize and stretch the chains

Slats centering:

13.1. Check internally the distance from the slats to the elevator side and, if necessary, loosen the bearing bolts and centralize it.

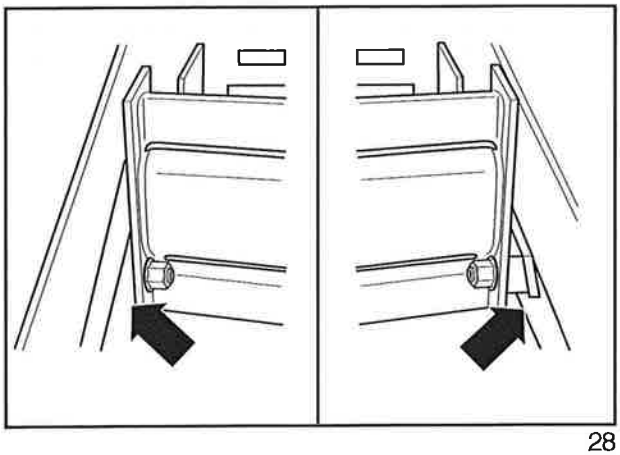

28

13.2. After centralizing, apply Loctite 242 on the shaft's fastening bolts and tighten them.

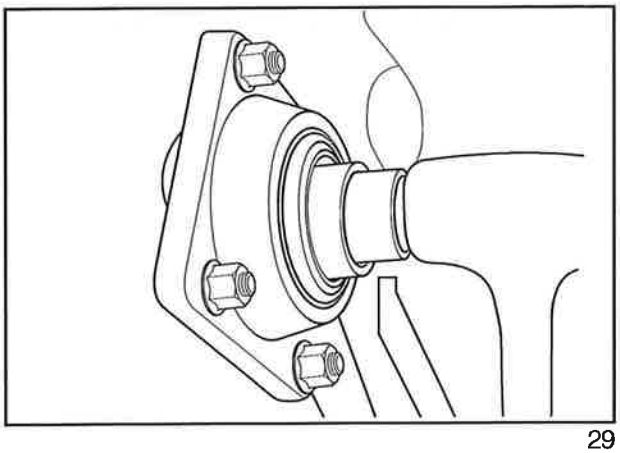

29

13.3. Adjust the gears positioning, so that the chain be tangent to the wear bars with a small clearance of 0.5 – 1.0 mm and fasten the lock.

Next, fasten the bearing, tightening the 3 bolts.

Repeat this procedure for the 4 gears.

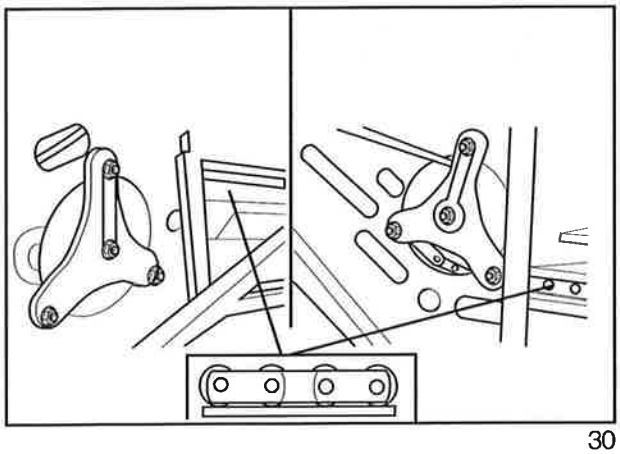

30

13.4. Tighten the tensioner bolt on both sides, by tightening them evenly.

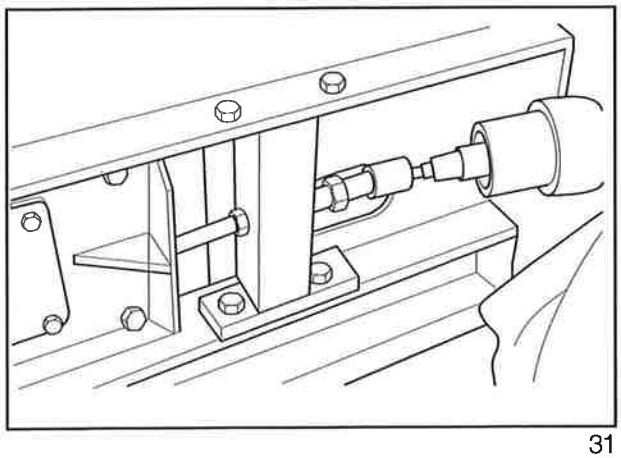

31

13.5. Check at the bottom of the elevator if the chains stretching are even, by forcing the left side and the right side slats.

The clearance must be within 1-1/2".

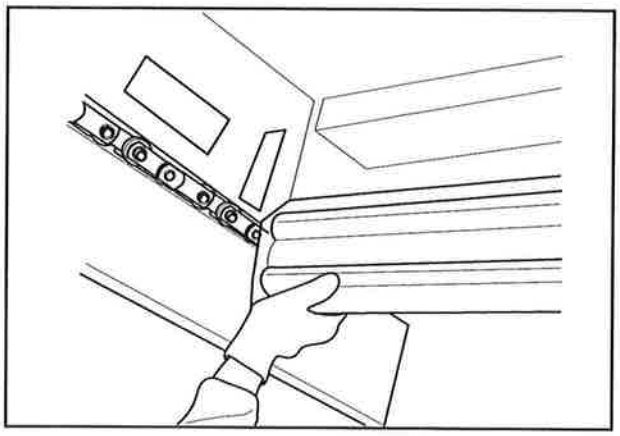

32

13.6. Lock the bolt, by tightening the lock nut.

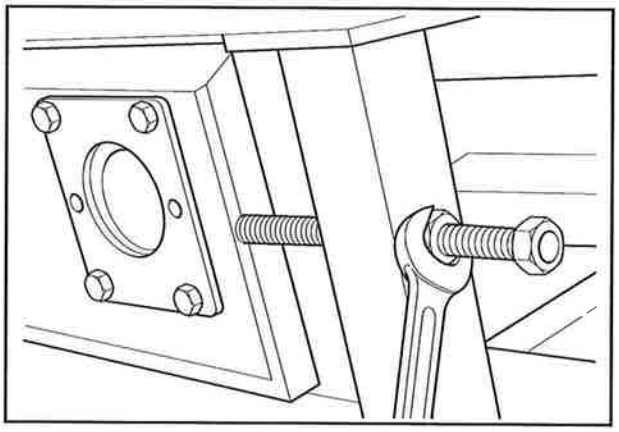

33

13.7. Tighten the 8 bolts on the adjusting plates on the right and left sides.

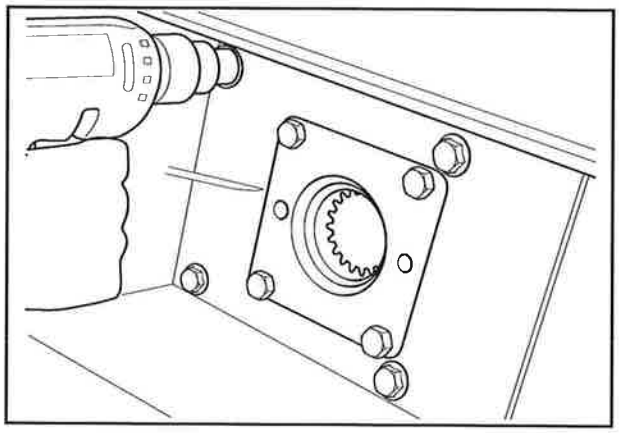

34

13.8. Tighten the 3 bolts on the adjustable floor.

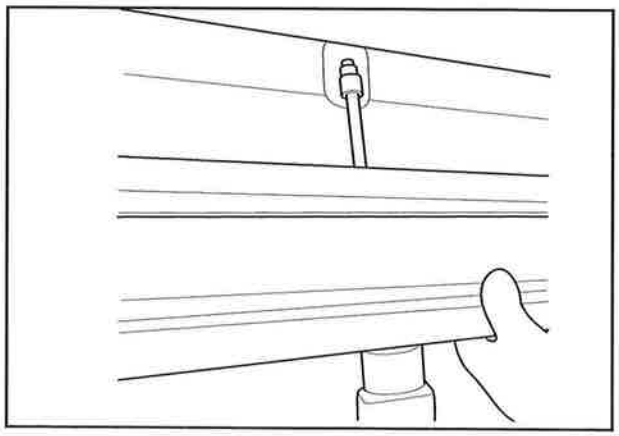

35

14. Protection assembly

14.1. Position the protection under the elevator.

Lift the protection front side and fasten it to the elevator eyes using items 5 and 6.

Install the tie rods (item 2) on the protection.

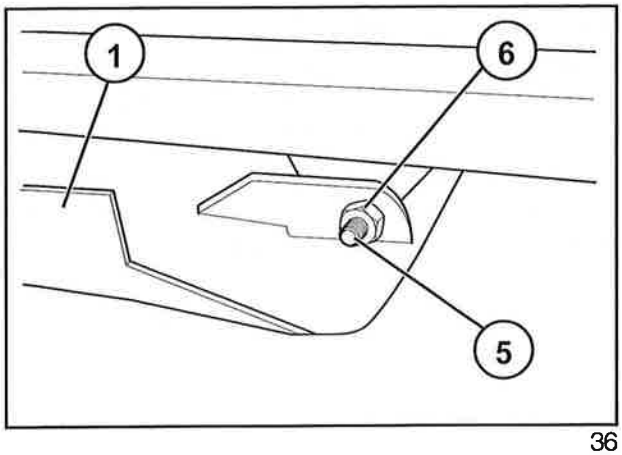

36

15. Install the elevator mounting flanges on the machine.

1 - Mounting flanges

2 - Bearing

3 - Grease nipple

15.1. Assemble the bearing (item 2) on the flange (item 1) (2 sets).

Assemble the grease nipples (item 3) in the flanges.

Install the flanges on both sides of the elevator.

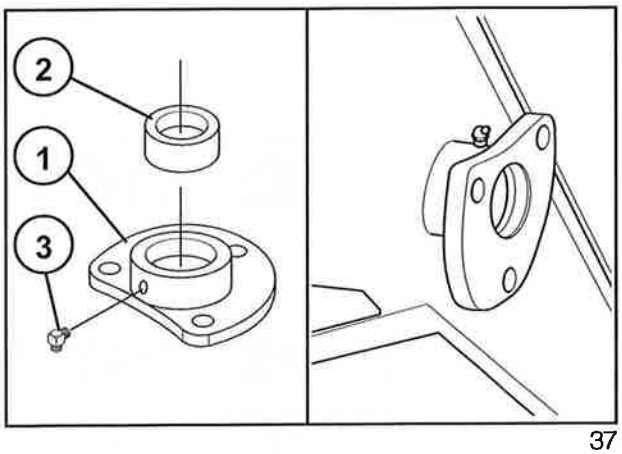

37

Breaking the Chain for Removal

Grind both pins where you intend to "disassembly" the chain and remove the side plate and the pins from the links connecting the chain.

To reconnect the chain, the same side plate can be used with 2-1/4" x 3/8" bolts and nuts (elevator's bolts) installed thru the connecting pins to assemble the side plate.

If needed, there is a commercially available connecting link.

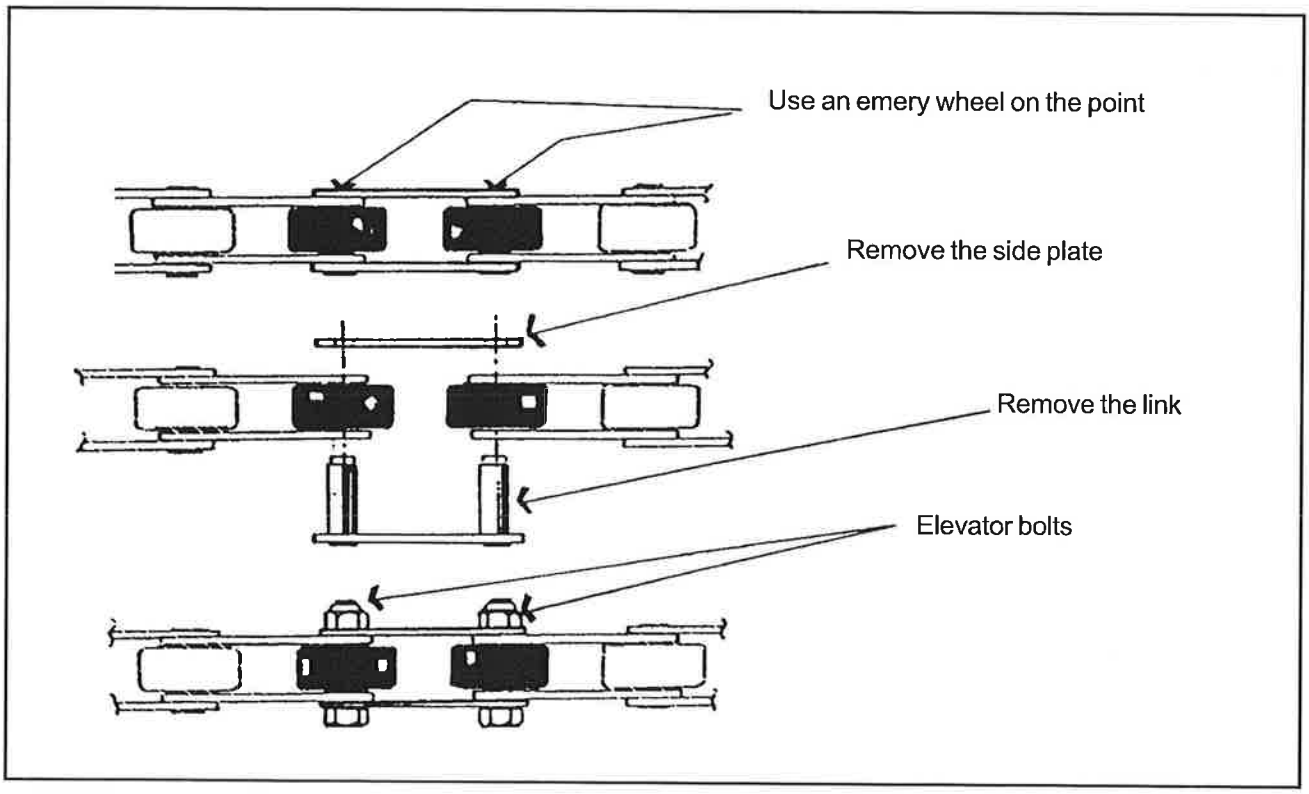

38

PRIMARY EXTRACTOR (ANTI-VORTEX)

DESCRIPTION

The vertical arm extractor comprises a fan, driven by a hydraulic motor assembled oh the hood's upper side. The extractor frame bears the fan and the cleaning chamber supports.

A vertical shaft on the center of the structure has tapered bearing supporting the fan; these bearings are lubricated with grease.

The fan support is driven by a splined shaft. The coupling that connects the splines on the driven shaft to the motor has an external notch used to activate the proximity sensor, which measures the extractor revolutions.

ASSEMBLY

NOTE: *To help on the ring assembly with the* ***correct code****, see the figures bellow.*

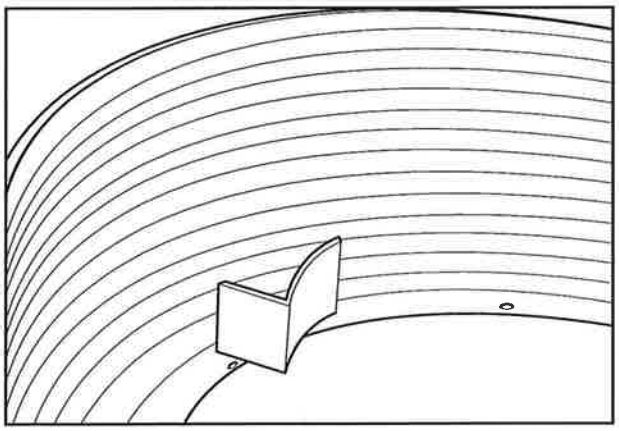

Heavy Duty 1

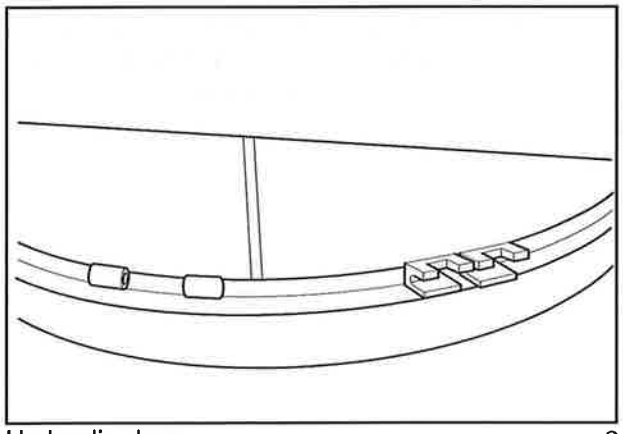

Hydraulic slew 2

CAUTION DURING DISASSEMBLY

- *Check the bearing and lower deflector condition and replace them as necessary.*
- *Check the blades condition and replace them as necessary; be careful with the blades balancing.*

DISASSEMBLY

Assembly in the reverse order of disassembly.

Replacement of the Extractor Blades Kit

1. Remove the lower cap by removing the central bolt.
2. Remove the bolts fastening the blades to the fan hub.
3. Replace the worn blades by new ones.

   NOTE: *Use only CASE IH Austoft blades, which are sold in balanced kits.*

1. Assembling of the ring on the standard ferrule

1.1. Saw the drive chain support ring about 10 mm on the welding position.

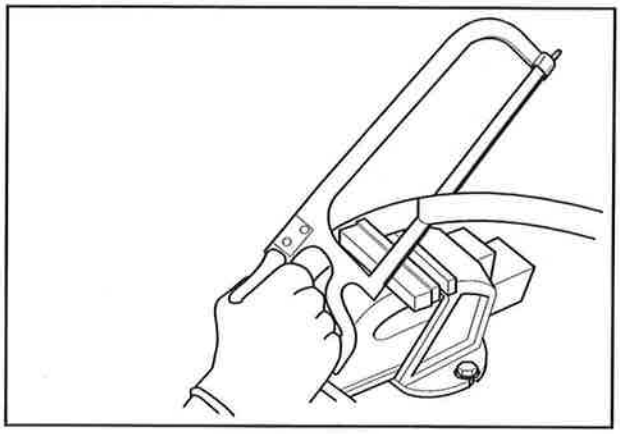

3

1.2. Position the ferrule facing down, hold the ring with clamps, mark and drill a hole with a Ø11 mm drill, fastening them with the bolts and nuts.

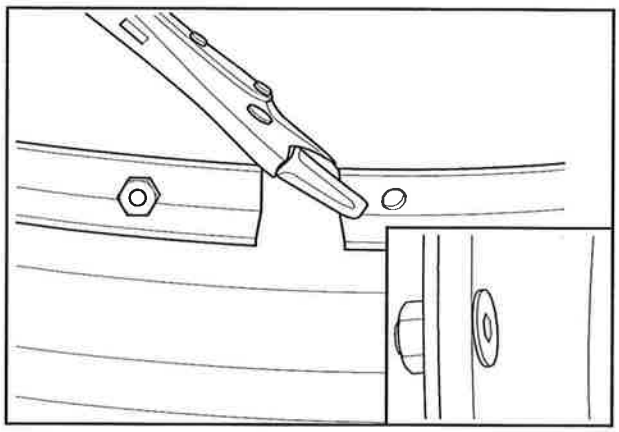

4

1.3. Position and assemble the six grease nipples on outer side of the ferrule and the four grease nipple inside the ferrule housing.

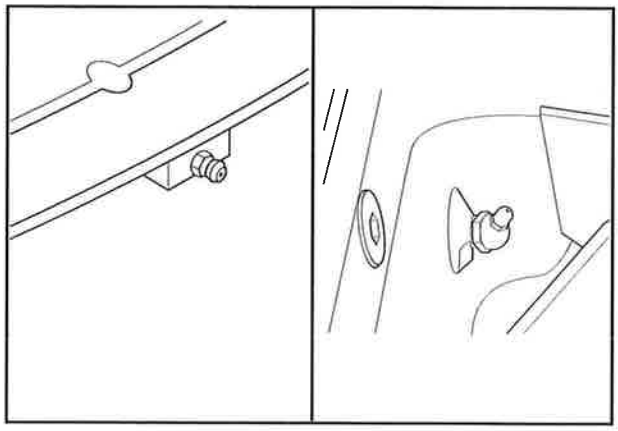

5

2. Standard wear plate assembly

2.1. With the help of a rolling bridge, place the ferrule back on the upright position and, with the help of eyes, lift the wear plate, placing it on the ferrule housing. With the help of wedges, "put it" on the ferrule housing.

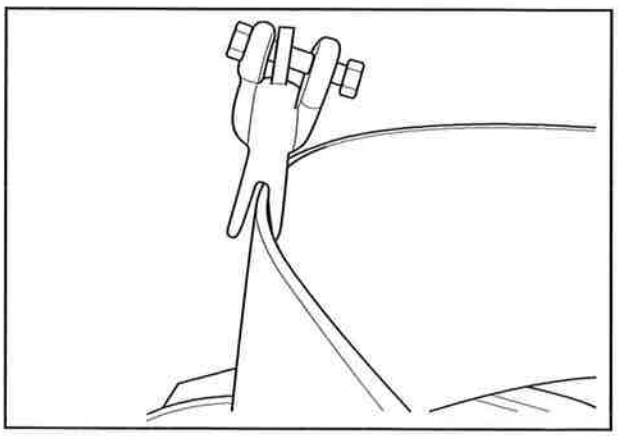

6

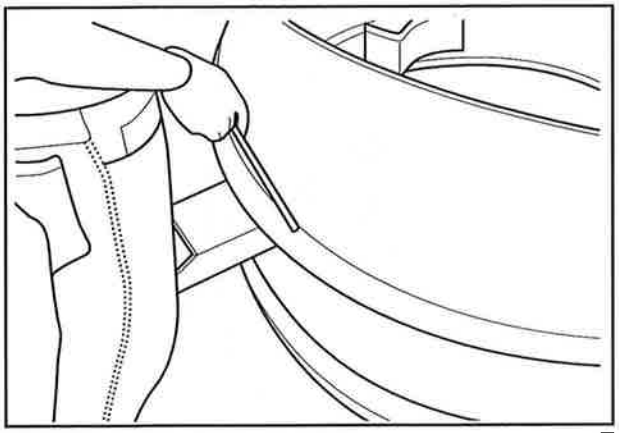

Wedges to help the assembly 7

NOTE: *When the primary extractor is equipped with Heavy Duty Ring, coated with hard electrode, the assembly of the wear plate must not be performed, skipping to the next step.*

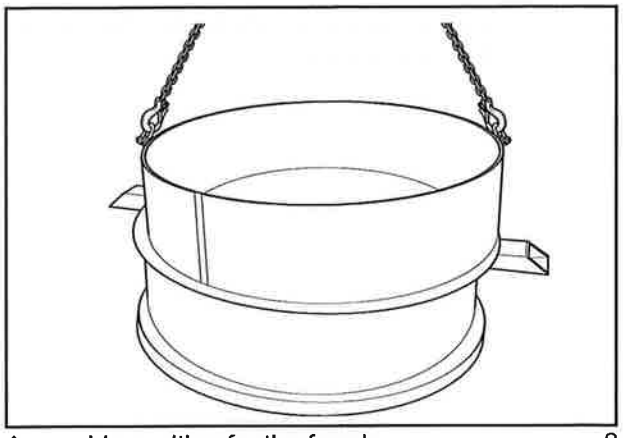

Assembly position for the ferrule 8

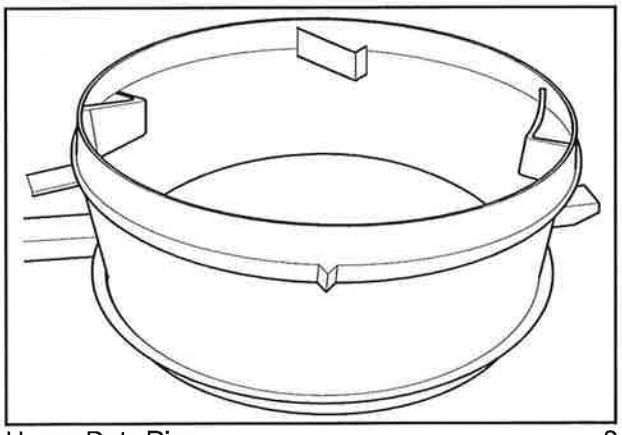

Heavy Duty Ring 9

3. Bearing hub assembly

3.1. Apply Loctite 601 on the two bearing cups and install them with interference on the bearing cup housings. To help the installation, use a driver.

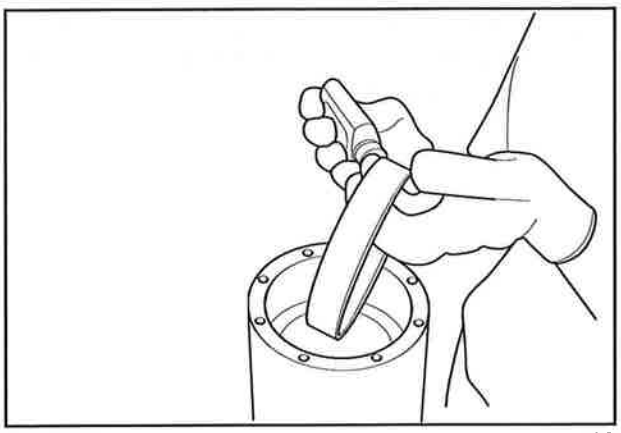

Upper side 10

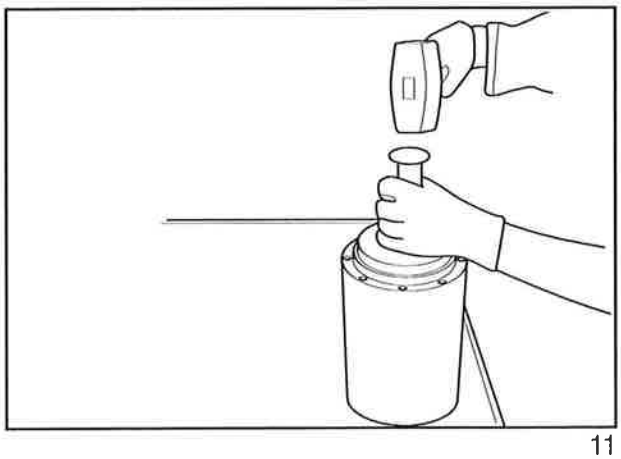

11

3.2. Position the bearing on the bearing housing on the hub's upper side.

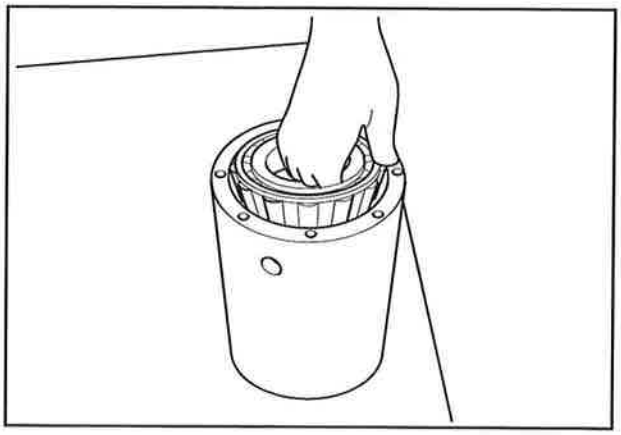

12

3.3. Using the snap ring pliers, install the the bearing snap ring in the housing located on the bearing hub upper side.

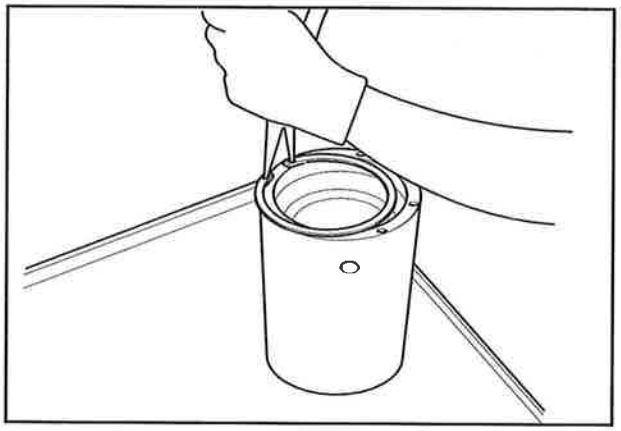

13

3.4. Install the bearing housing, as shown on the figure beside. After installing the housing, tap it until seating.

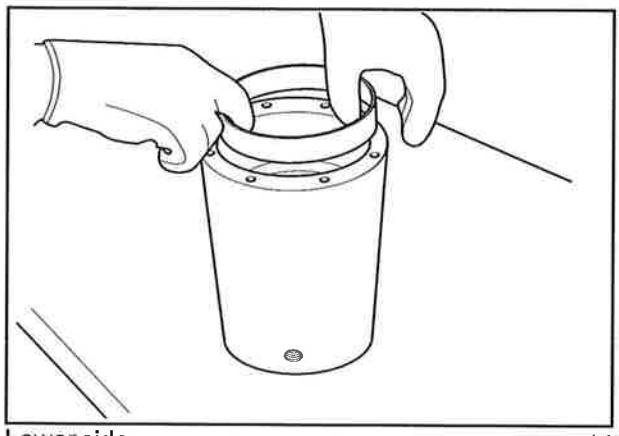

Lower side 14

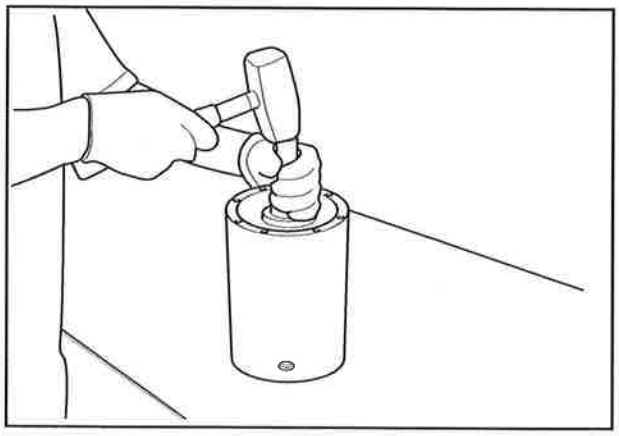

15

3.5. Position and assemble the seal in the housing, using as a limiter, the snap ring previously installed.

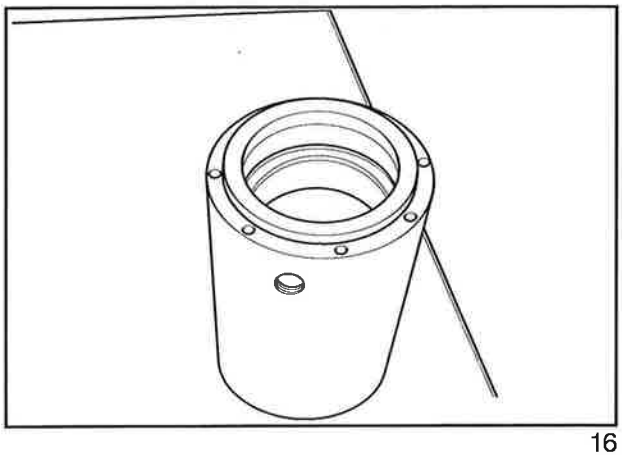

16

3.6. Apply sealing Loctite 515 on the bearings hub upper side and position the shaft sleeve (1) and the ring, fastening the assembly with bolts and applying Lotite 262 on their threads.

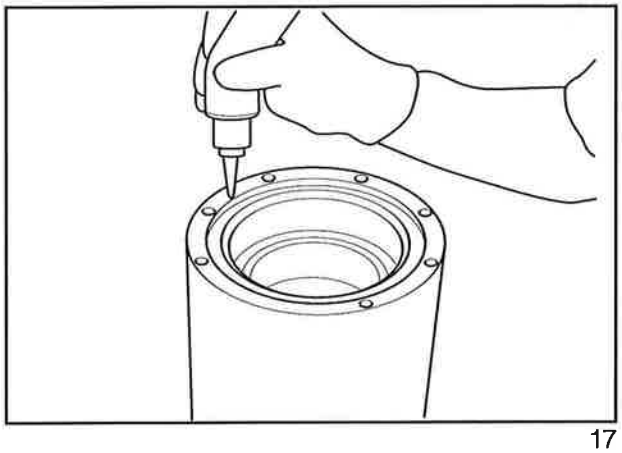

17

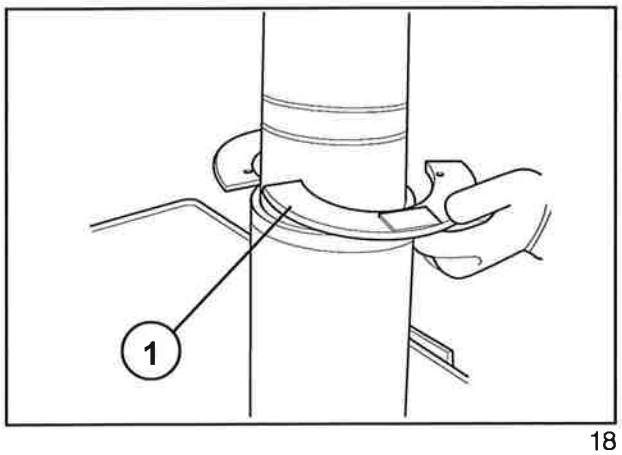

18

3.7. Using a clean cloth, clean the pre-assembled upright arm shaft and try the lock bolt in the assembly.

Install two M8 eye bolts on the assembly, lift it carefully and position the pre-assembled upright arm shaft.

With the help of a device (hub) supported on the bearing race, tap the assembly until it seats on its final installing position.

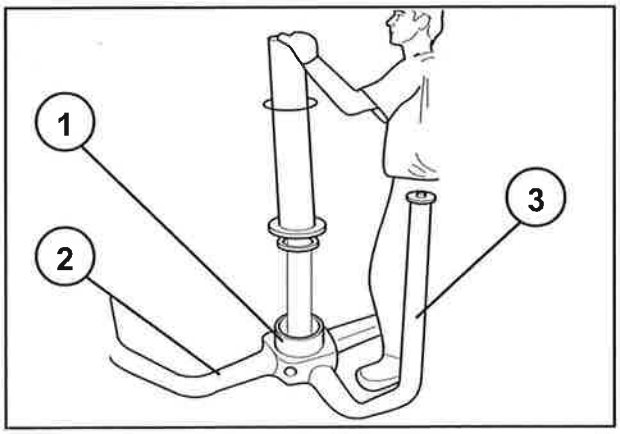

1. Support; 2. Front arm; 3. Side arm 19

- Distance after the assembly and before tapping it.

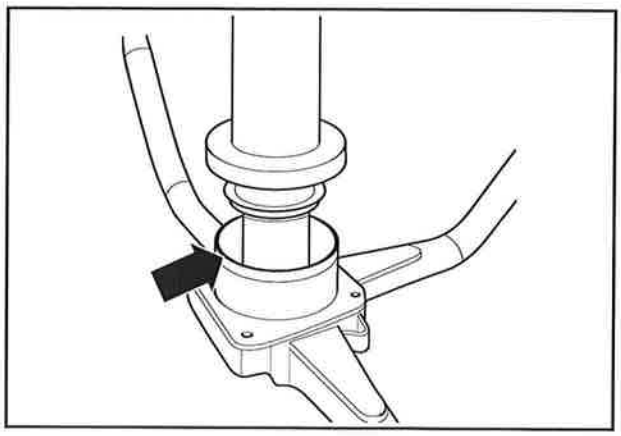

20

NOTE: *See the continuation of the assembling.*

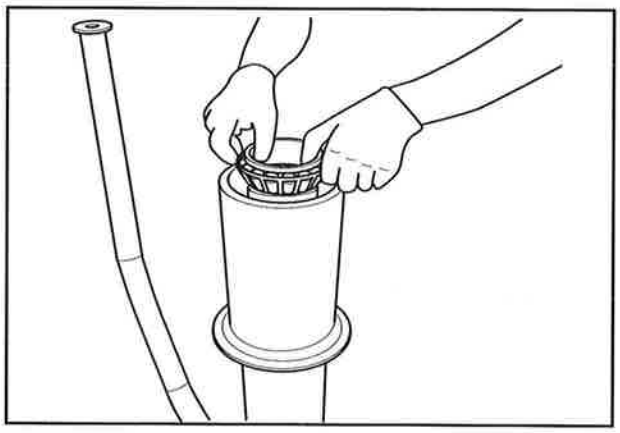

21

- A driver to help on the assembling.

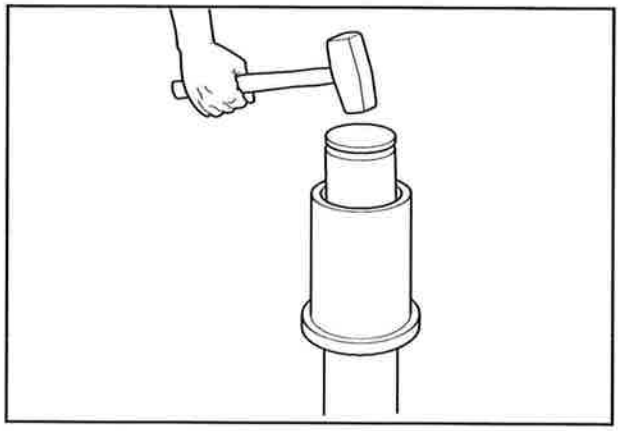

22

3.8. Install the lock washer using, if needed, a pin and a hammer to set it, until it rests on the bearing.

23

3.9. Install the snap ring in the housing.

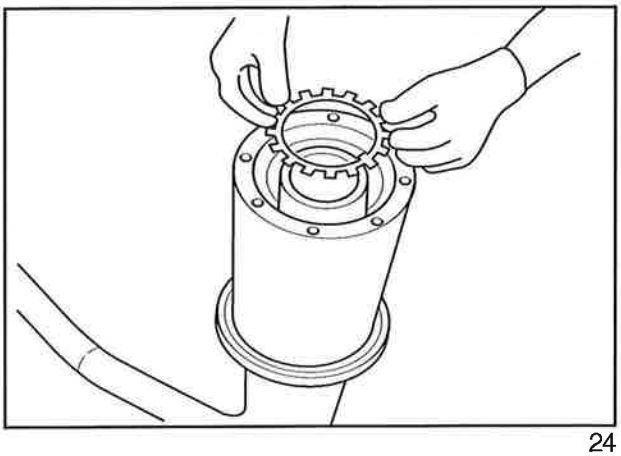

24

3.10. Install the lock nut on the assembly, screwing it until it touches the part.

Tighten the assembly with CA06020 or CA06020-1 devices, tap it with the help of the device and re-tighten it to reach zero clearance on the bearings.

Unscrew the lock nut to reach the clearance and the null pre-load of the assembly and fasten the lock washer on the lock nut assembly.

Install the grease nipple adapter and the grease nipple and lubricate with the help of hydraulic grease pump, connecting it to the grease nipple until filling the assembly; check if the excess leaks through the upper bore.

NOTE: *Check if the assembly rotates freely.*

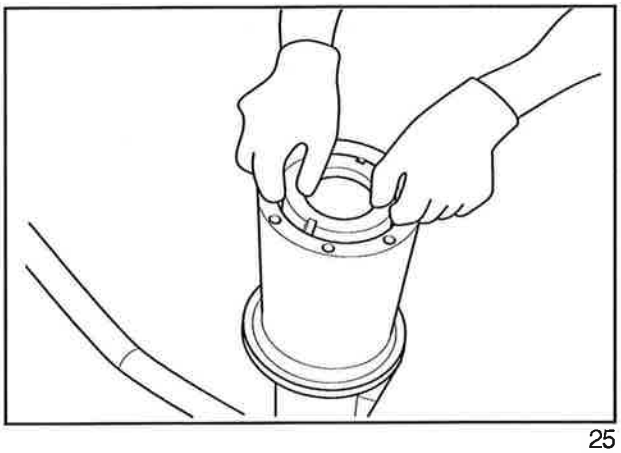

25

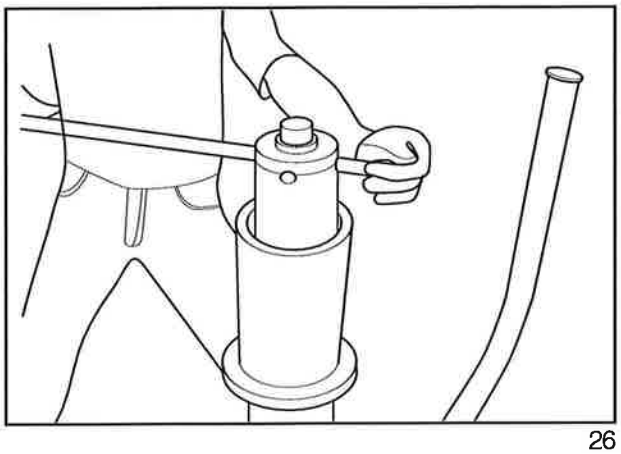

26

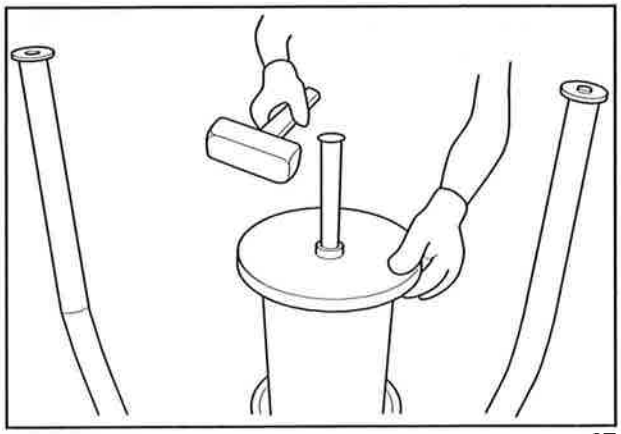

27

IMPORTANT: *After assembling the shaft bearing, apply grease.*

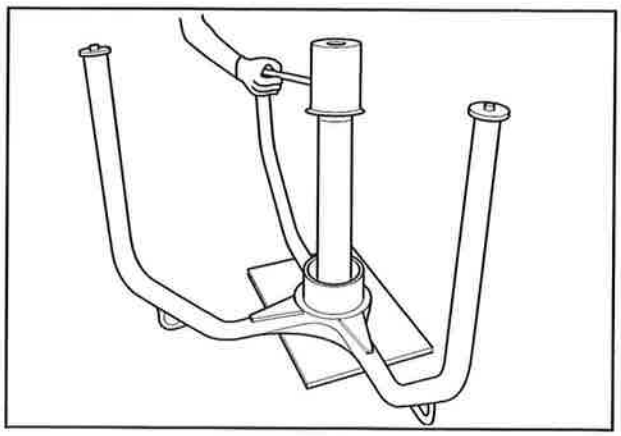

28

3.11. Apply sealing (Loctite 515) on the face and position the coupling.

Fasten the assembly with bolts, applying Loctite 262 on the threads and torque it to 35 N.m (25 lb.ft).

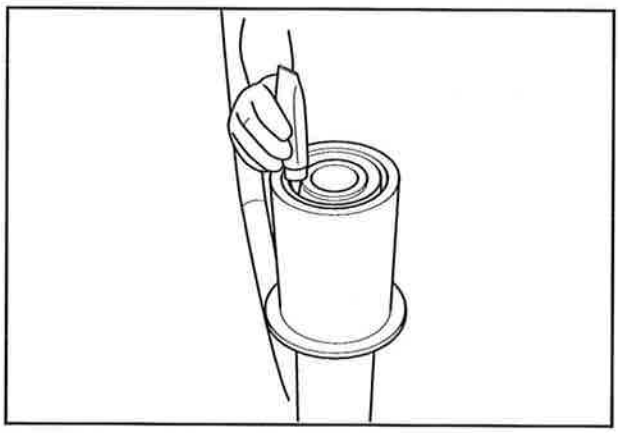

29

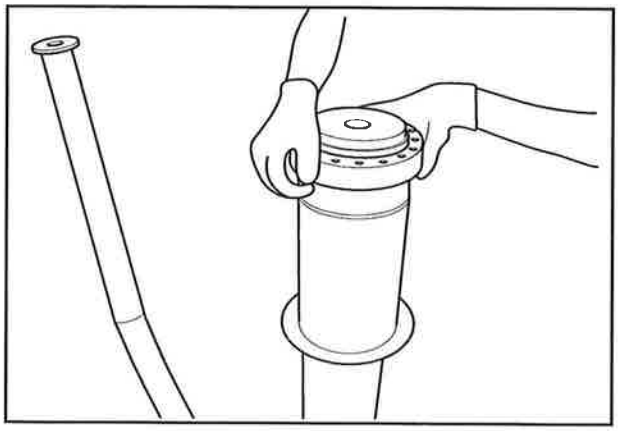

30

Finally, assemble the stud bolts in the fan, applying Loctite 262.

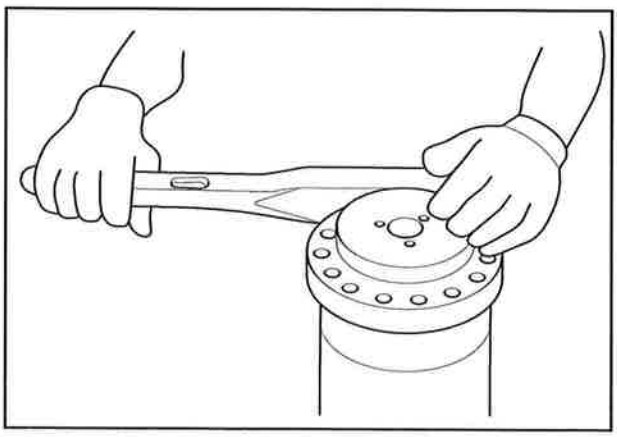

31

Firmly tighten the stud bolts, using the nut and the counter nut to help on the procedure.

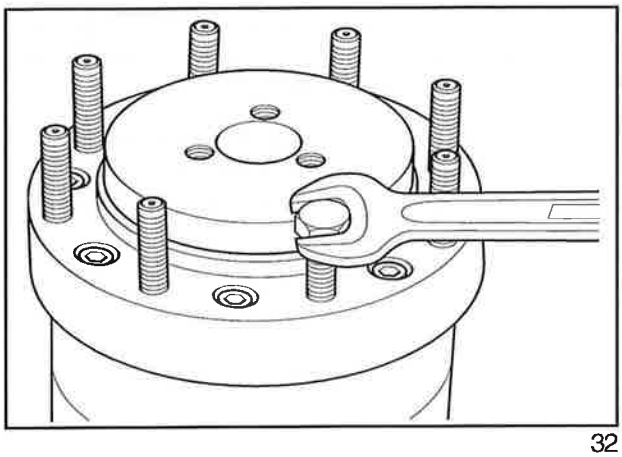

32

4. Hoods assembly

4.1. Position, assemble and fasten the hood supporting flange, with 12 sets of bolts with plain washers, lock washers and hex nuts.

NOTE: *Before the assembly, check the thickness of each hood:*

A) Front side: 15 – 20 mm thick

B) Outlet: 10 – 15 mm thick

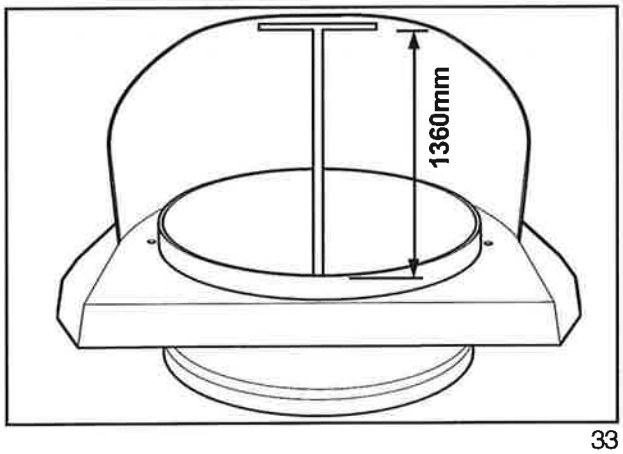

33

4.2. Place the front side hood over the support, at a height of 1,360 mm and equalize the distance of the fastening hole edge with the hood and lock its inner side with wooden blocks to help the fastening.

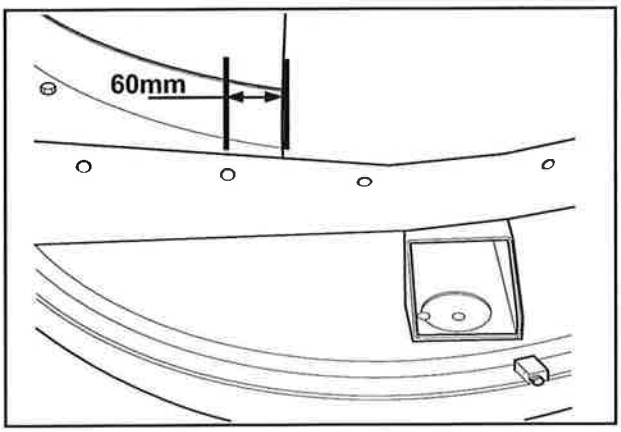

34

4.3. With the hood on its correct position, drill it on the holes position and fasten the assembly with six Nyloc bolts and nuts.

On the intersection of the two hoods, it will be used two bolts and nuts later on.

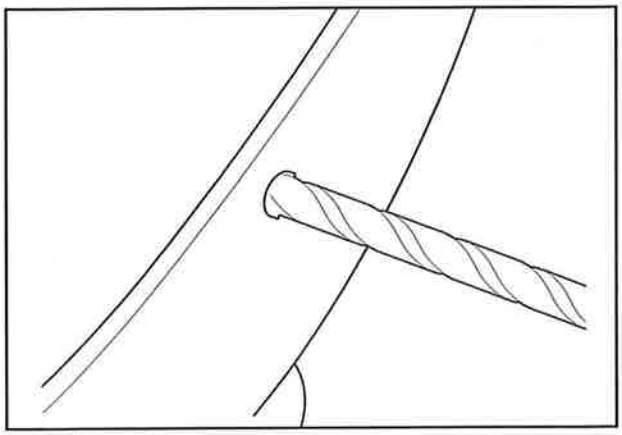

Drilling (Diameter 12 mm) 35

4.4. Block the pre-assembled assembly, position the device to set the height at 1,360 mm and install the outlet hood.

Position the hood mounting plate and fasten it with two bolts on the lower side of the hood support (use two sets of Nyloc bolts and nuts).

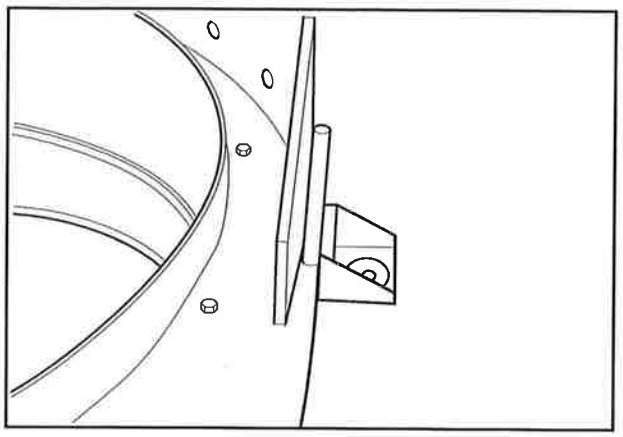

36

With the help of a measuring tape, mark the center of the outlet hood to position the fastening ring.

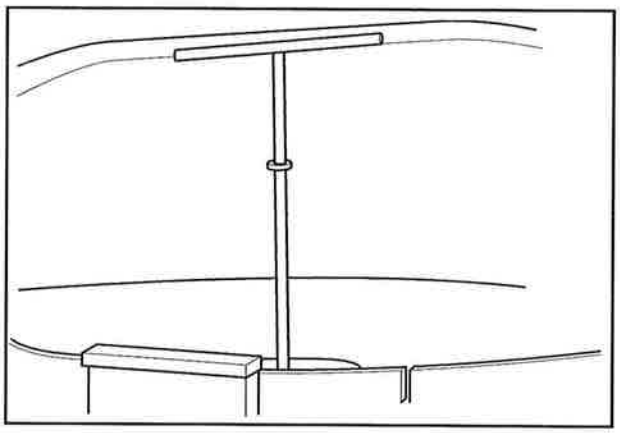

37

Drill holes and fasten the assembly, starting from its center, with twelve sets of Nyloc nuts and bolts.

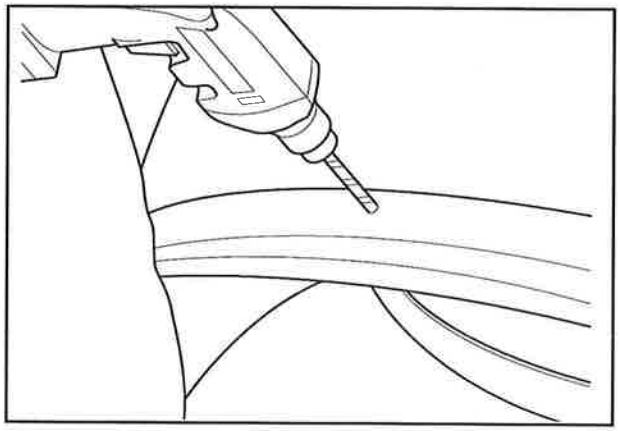

38

4.5. Position the device to fasten the hoods union and, after fastening them, mark 20 mm beside to make a hole with a 5/16" drill and fasten the assembly with 16 sets of Nyloc nuts, bolts and washers.

On the intersection of the hoods with the hoods support, fasten the assembly using two bolts and nuts. Disconnect the fastening device from the hoods.

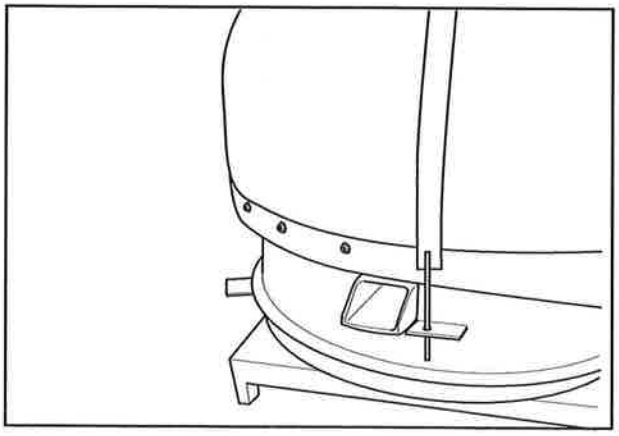

39

5. Assembly of the pre-assembled upright arm assembly on the pre-assembled ferrule assembly with the hoods

5.1. Place the fan drive shaft and install the snap ring in the housing.

Next, apply a thin coat of grease on the shaft teeth.

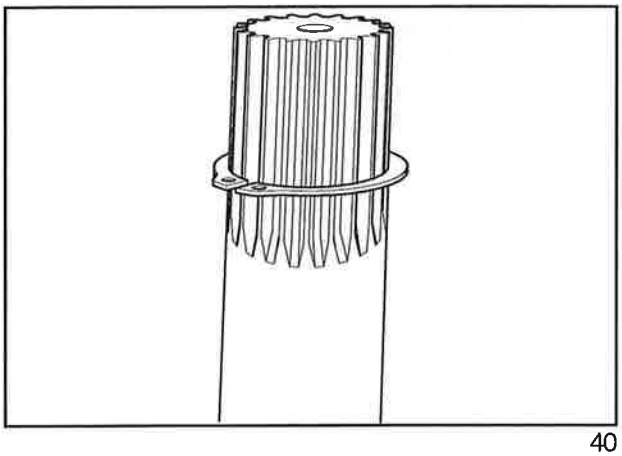

40

5.2. Position and install the snap ring on the pinion.

Next, apply a coat of grease on the pinion teeth.

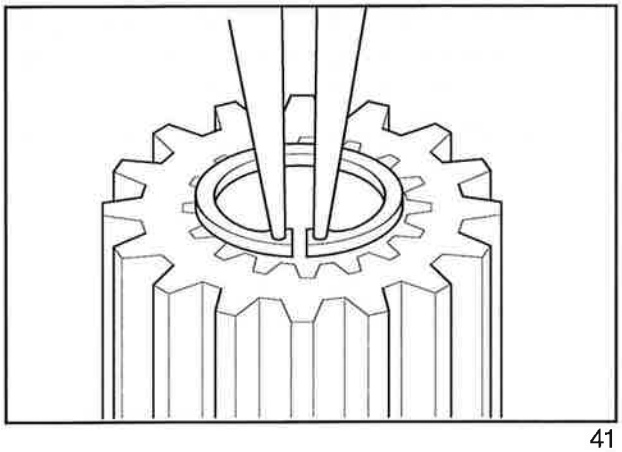

41

5.3. Position and install the fan drive shaft in the housing of the pre-assembled legs assembly, inserting the side with the snap ring installed facing down, until you feel that the shaft has settled in the bore of the pre-assembled adapter.

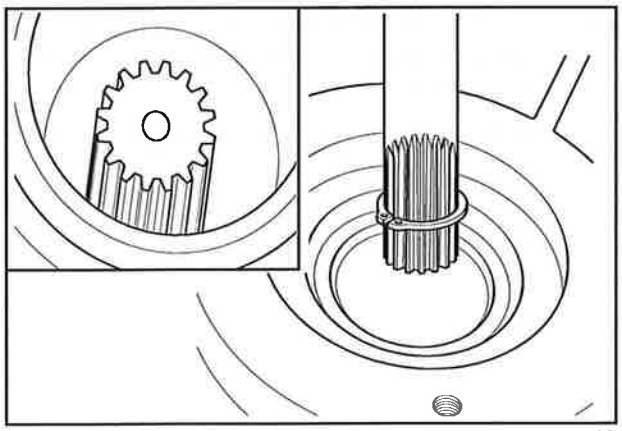

42

5.4. Position and install the pre-assembled pinion in the shaft housing, until you feel that the components are locked.

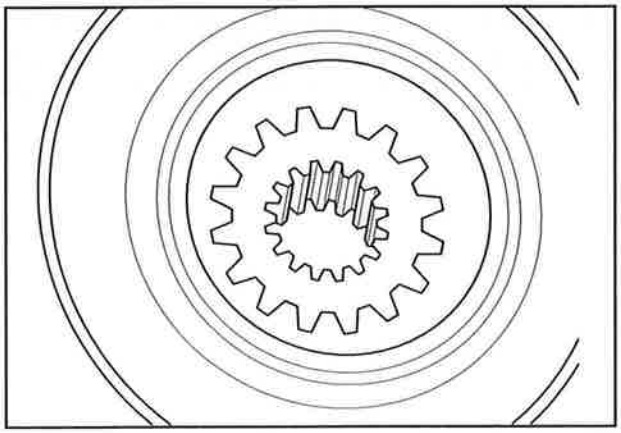

43

5.5. Position the marking device (1) over the pre-assembled assembly and mark the center of the hole to be drilled, taping the drift on its upper center.

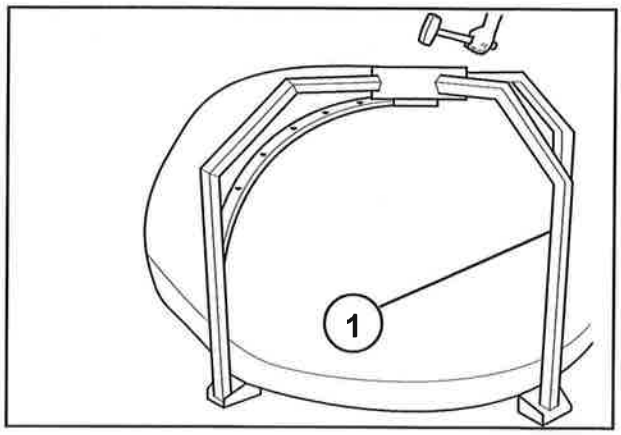

44

5.6. With the help of a compass and using the defined marks as the center, draw a 230 mm diameter hole and cut it with a jigsaw.

NOTE: *Check the hood's total measures / thickness (- 25 mm +35 mm).*

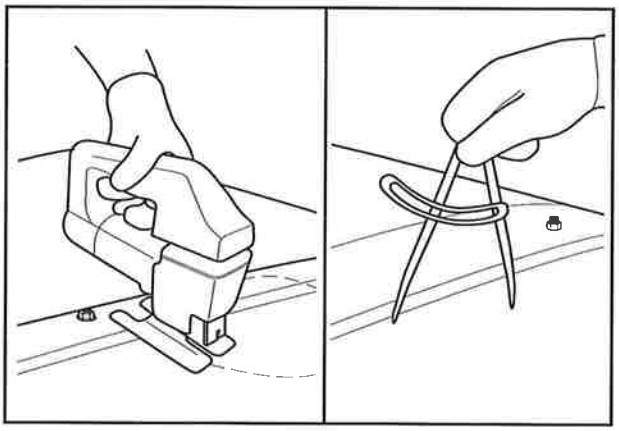

45

5.7. Position and assemble the supporting shoe, using a set of two bolts with lock washer for each shoe.

To fasten the spider on the assembly, use three bolts and lock washers.

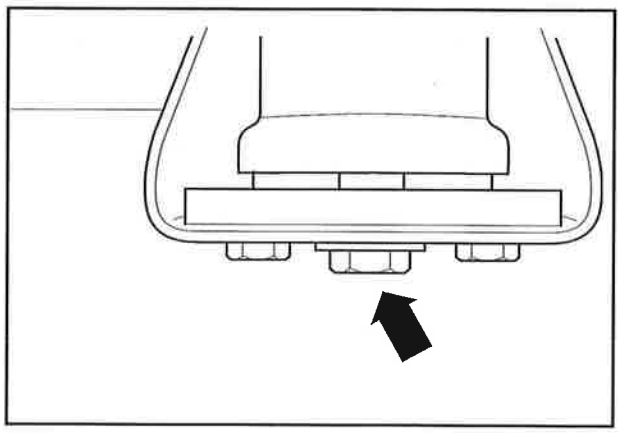

46

5.8. Lift the pre-assembled upright arm assembly and place it in the hood housing, fastening it on the shoe position with three bolts and lock washers.

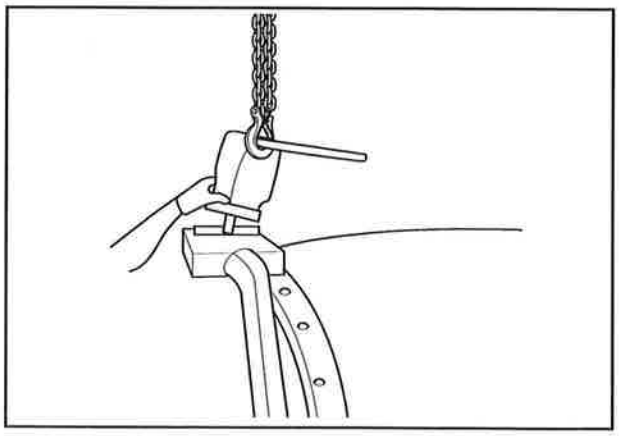

47

6. Assembling the hydraulic motor assembly

6.1. On a bench, position the o-ring on the adapter 15/16" housing and fasten it to the motor, using the flanged clamps and eight 7/16" x 1-1/4" hex bolt

Make sure that the o-ring wasn't damaged during the assembly.

6.2. Assemble the nipple on the metallic piping and connect the other end to the adapter previously installed on the hydraulic motor. Do not tighten this fitting for a later adjustment.

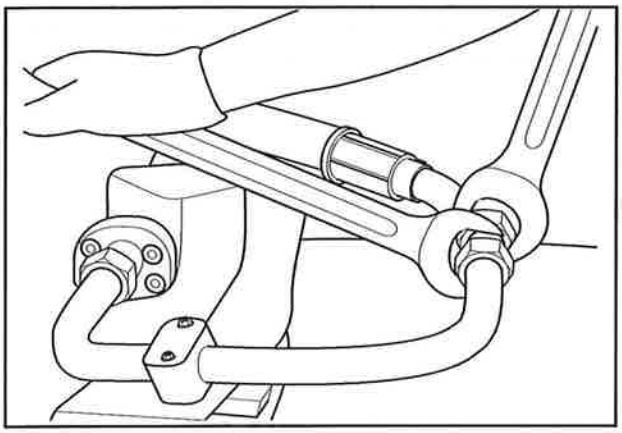

48

6.3. Position the hoses support on the motor flange, on the opposite side of its identification and fasten it with two bolts.

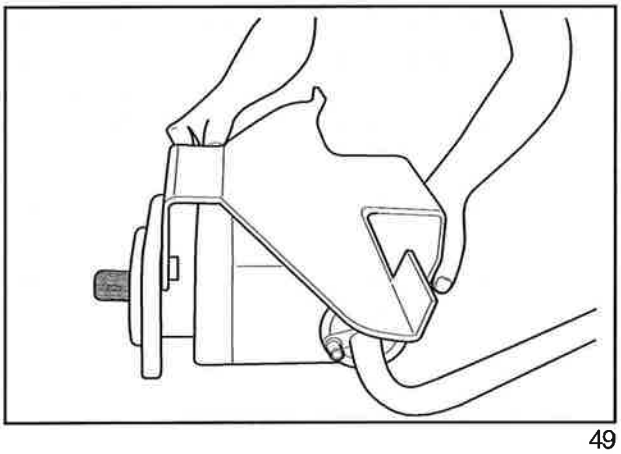

49

6.4. Fasten the metallic piping to the support with two sets of clamps, four Nyloc bolts, plain washers and nuts.

For this procedure, fasten definitely the metallic piping to the hydraulic motor.

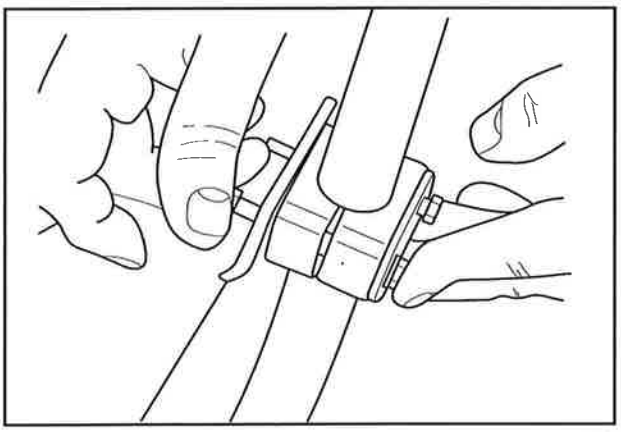

50

6.5. With the hydraulic motor pre-assembled, install its shaft on the pre-assembled pinion, and position it on the upright arm, fastening the assembly with bolts.

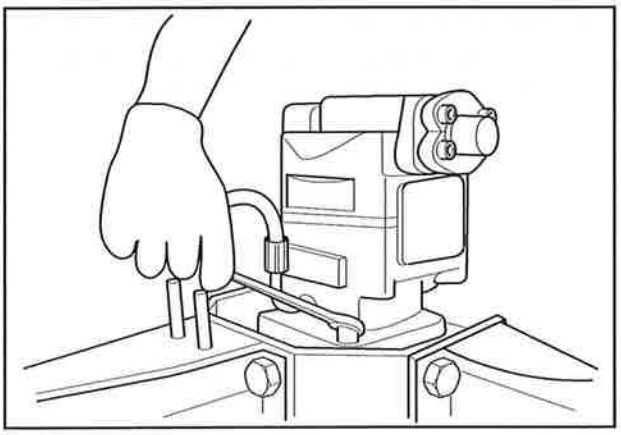

51

6.6. Pass a ¾" male pitch tap on the cleaning sensor housing threads.

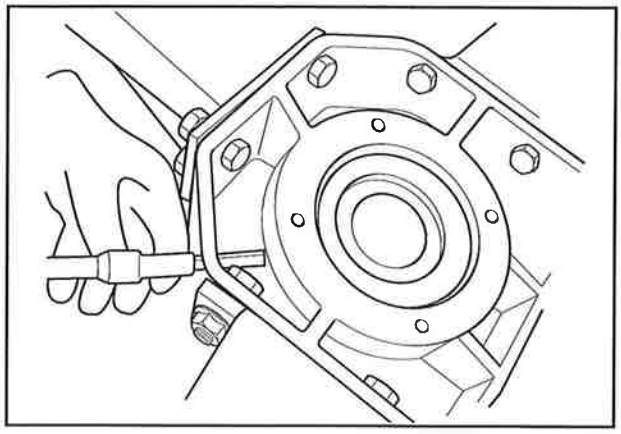

52

6.7. Install the connector and then connect the speed sensor by threading it carefully until it touches the end of its travel and, then, unscrew it by one lap and lock the assembly using a nut and lock nut.

Fasten the sensor's Packard terminal with Hellerman tape.

NOTE: *To assemble the Packard terminal, see specific procedute.*

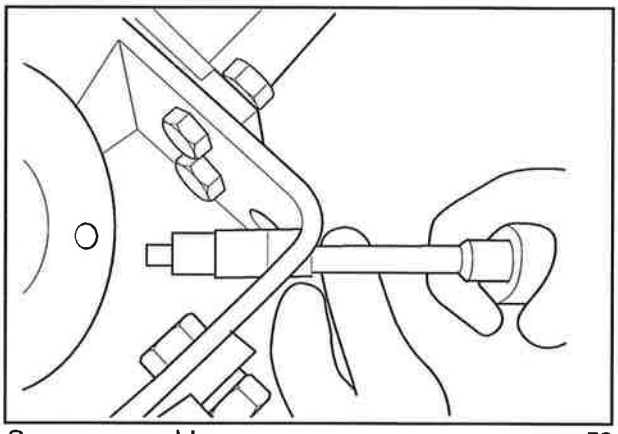

Spacer assembly 53

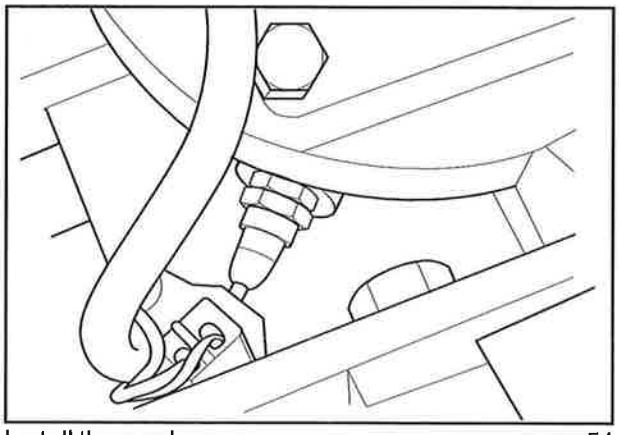

Install the washer 54

6.8. Remove the original drain from the hydraulic motor, placed just under the motor id and install the nipple and the hose on this place.

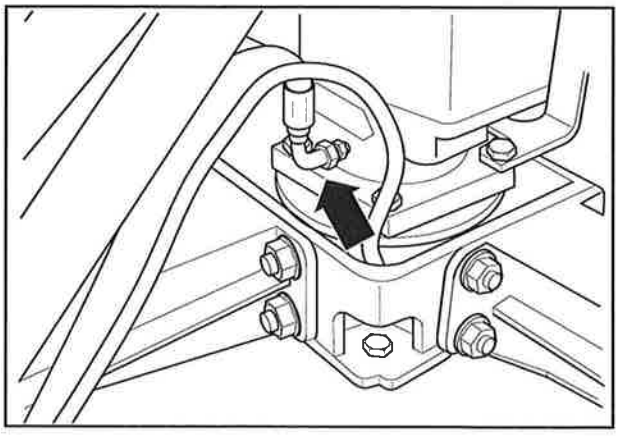

55

6.9. Install the hoses on the metallic piping fittings of the hydraulic motor and fasten them with clamps.

At last, fasten the hoses to avoid damages during the transportation.

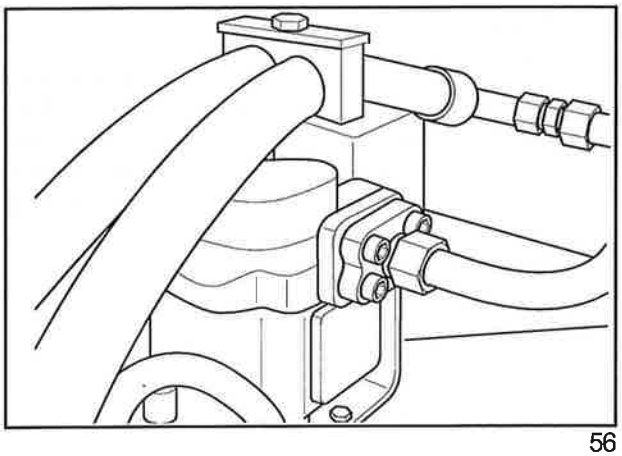

56

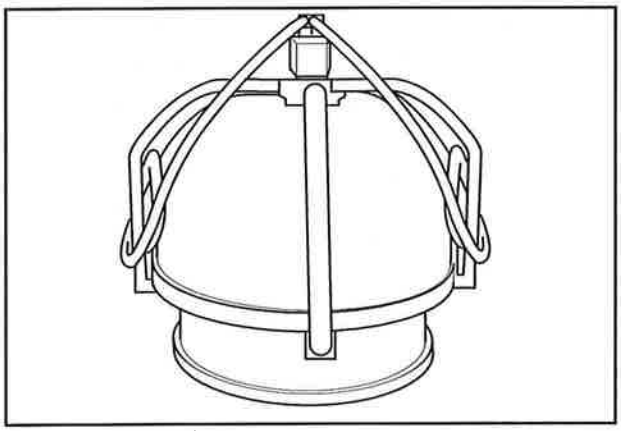

Mounted assembly 57

6.10. Install the fan hub in the upper deflector using eight bolts.

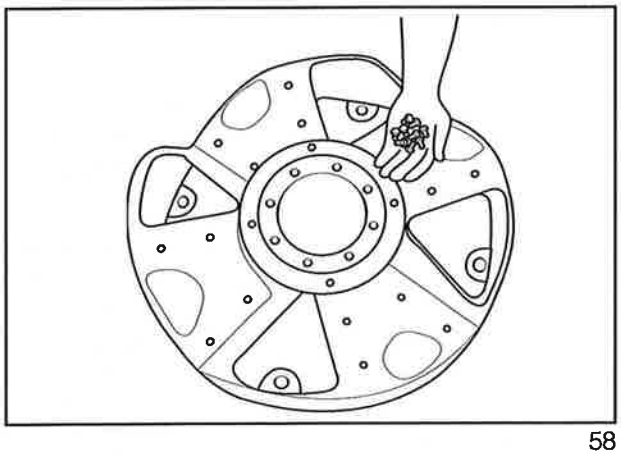

58

6.11. After installing the shaft on the whole mounted assembly (hub plus deflector), perform the hub balancing.

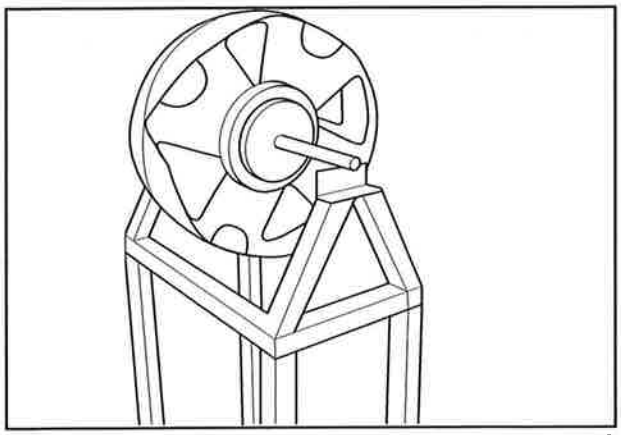

59

6.12. Balancing

After completing the previous procedure, turn the component on the device until it stops. Place the rod, without moving it, and place the heavier side on the weight scale. Check the reading on the weight scale. Drill a 0.8 mm diameter hole on the opposite side and make the counterbalance.

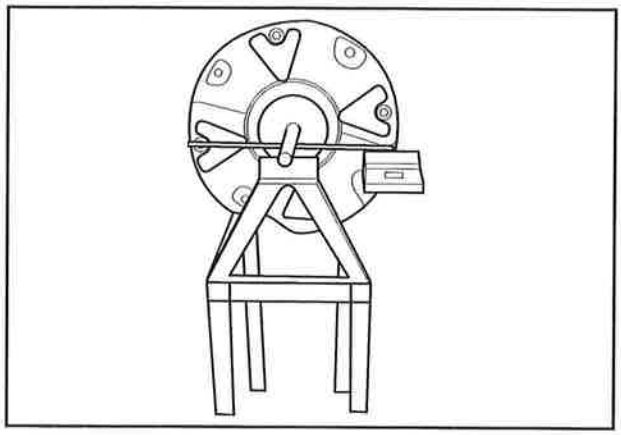

60

Install the counterweight according to the weight scale readings, and compensate it.

NOTE: *Use the bolt, nut and washers, according to the counterweight determined by the weight scale. After the adjustment, the weight scale shall not indicate any load, showing a perfect balance of the system.*

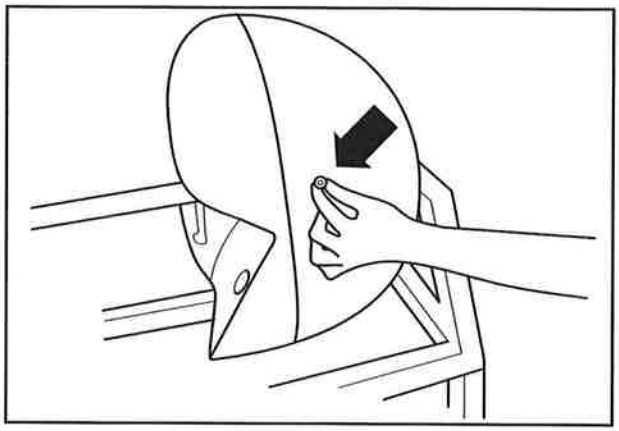

61

7. 4-Blade fan assembly

7.1. Place the pre-assembled fan hub with the previously balanced upper fairing on the cradle to make the blades assembly easier. Check if the blades have a maximum weight variation among them of 15 gr.

Place the first blade on the housing and fasten it with class 10.9 special bolts, lock washers, plain washer and nuts, correctly positioned on the housing at the opposite side; this housing is positioned on the hub. Pre-tighten the assembly using a pneumatic tool and then tighten the bolts on a criss-cross pattern to 110 N.m (90 lb.ft.).

NOTE: *Repeat the same procedure for the other blades.*

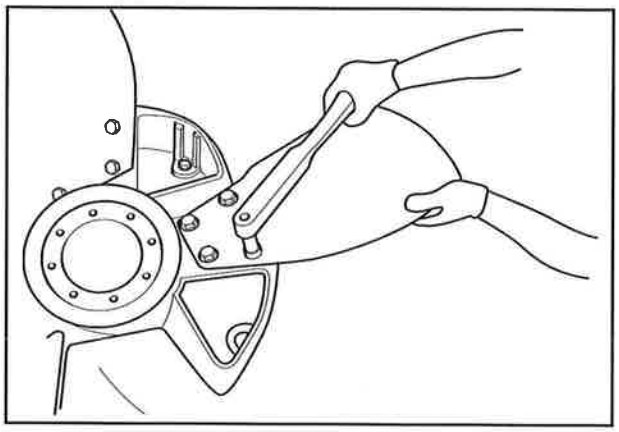

62

8. Assembling the lower deflector on the pre-assembled extractor

8.1. See the holes to be drilled on the part. (1/4" hole diameter).

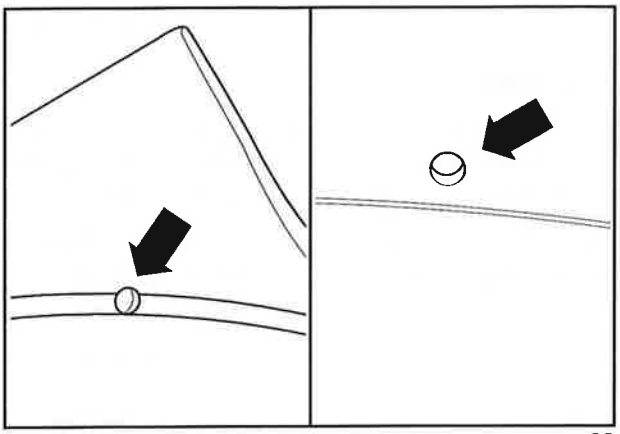

63

8.2. Place the lower fairing on the fan housing and fasten it with the stud bolt.

NOTE: *Use the grease nipple adapter and the grease nipple. Install the grease nipple facing down.*

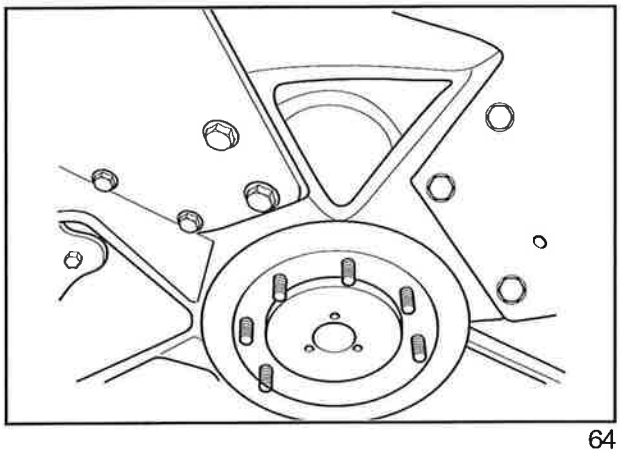

64

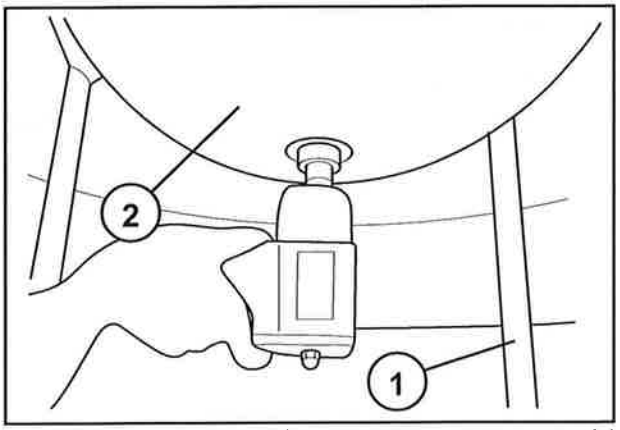

1. Supporting device; 2. Lower cap 65

SECONDARY EXTRACTOR FAN

DESCRIPTION

The extractor fan assembly comprises a cylindrical hub on which the curved blades are assembled. The secondary fan support diameter is 915 mm (36").

The hub is screwed on the shaft flange, installed in two bearings and driven by a Commercial M50 1-1/2" motor.

The extractor is designed to have a maintenance area over the fan blade.

The fan blade must be checked on a regular basis for signals of wear and fatigue. A grease nipple is installed on the flange top for lubrication.

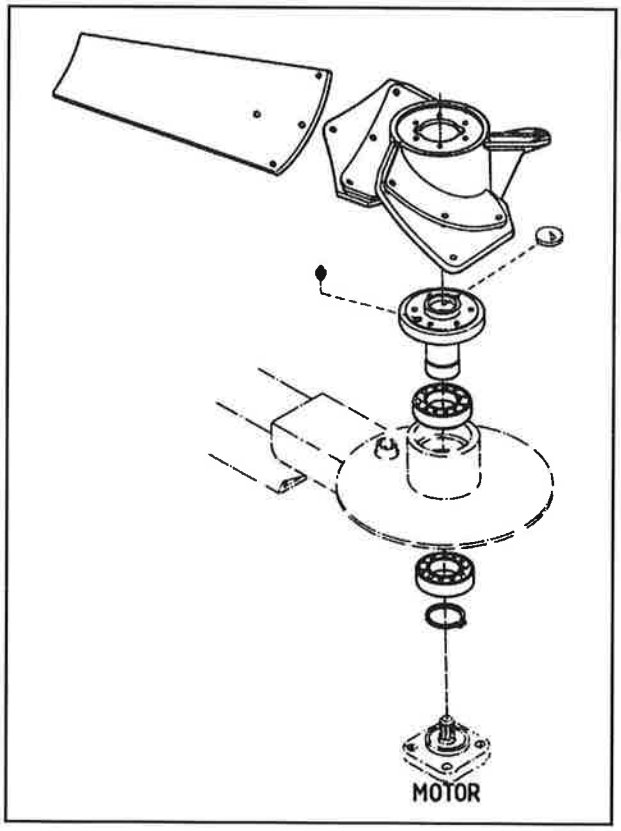

1

ASSEMBLY

1. Hood pre-assembly

1.1. Install the "U" beam (1) with four grease nipples.

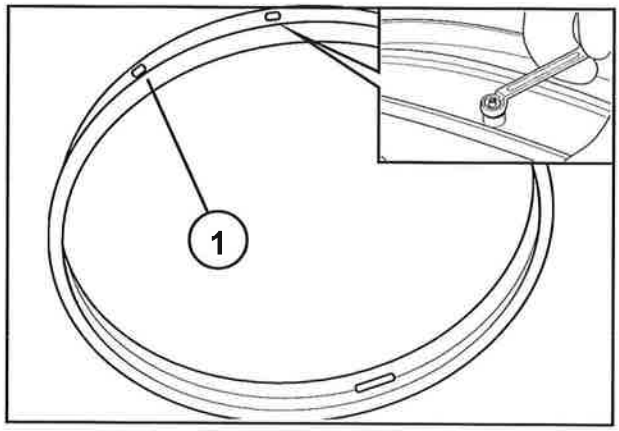

2

1.2. Place the "U" beam on the hood and align the tooth on the chain that matches with the hole on the center of the hood.

Mark (with a pen) the points to be drilled, remove the "U" beam from the top of the hood and drill the holes (12x).

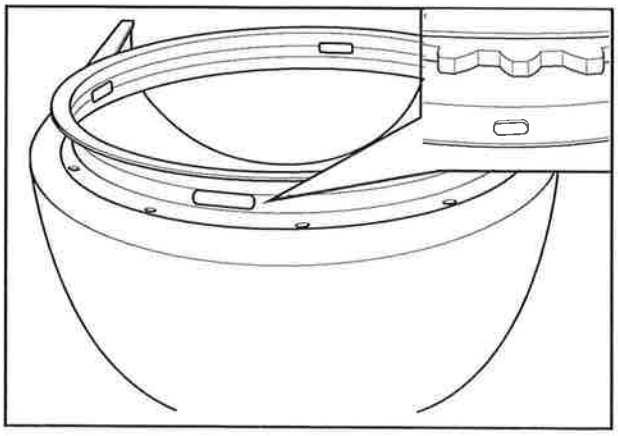

3

1.3. After drilling the holes, install the beam back on the hood and fasten it with bolts, washers, nuts and strips.

NOTE: *Fasten the strip by the bottom of the hood.*

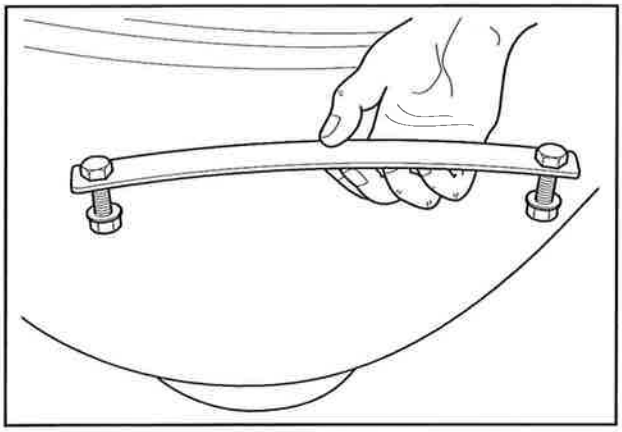

4

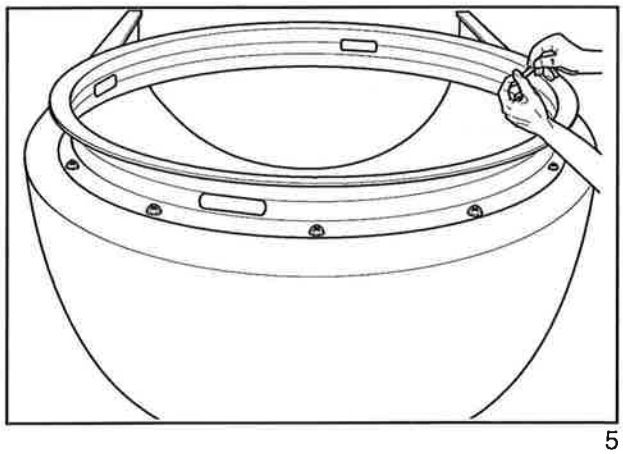

5

2. Extractor pre-assembly (Position 1 for the device)

2.1. First, clean the inner diameter with Loctite 7070, install two bearings, one in each side of the extractor (front side and rear side), until they reach their ends.

On the rear side, lock the bearing with a snap ring.

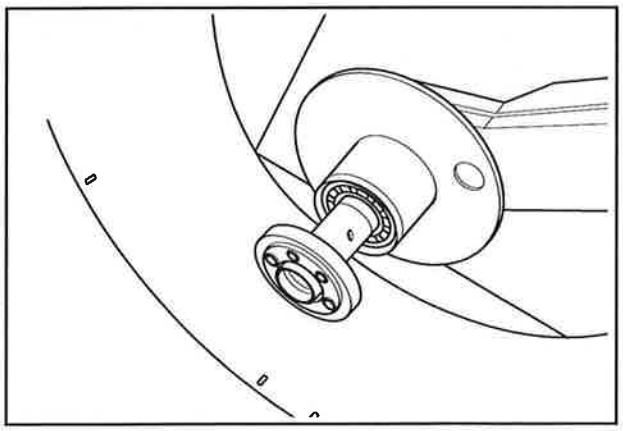

6

For the front side, install the hub on the bearing, until it reaches its end.

After that, fill the rear side with grease where the motor will be assembled.

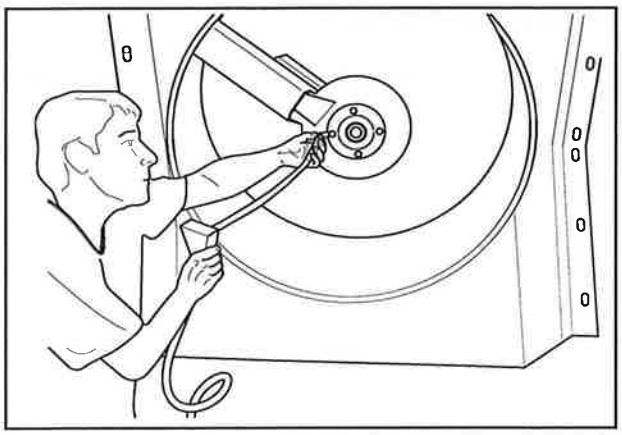

7

2.2. Install two adapters (1) and two hoses on the motor.

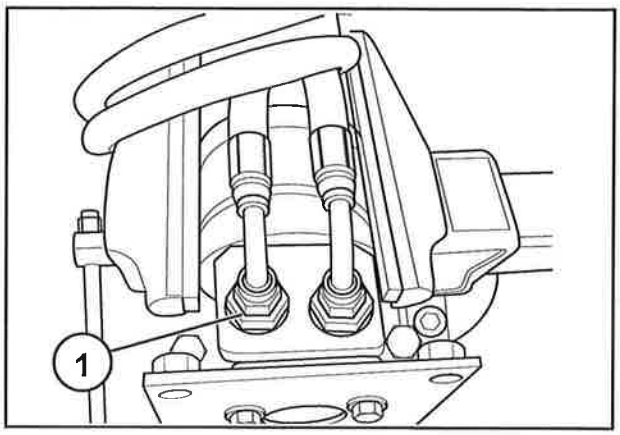

8

2.3. Fasten the adjusting plate with the motor to the extractor, using four bolts, lock washers and plain washers.

NOTE: *Apply anti-seize on the shaft.*

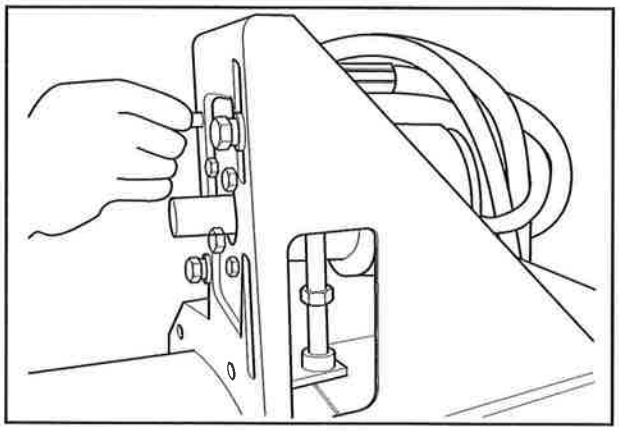

9

2.4. Install the gear on the motor shaft and fasten it with a bolt and a lock washer. Use Loctite 262 adhesive on the bolt.

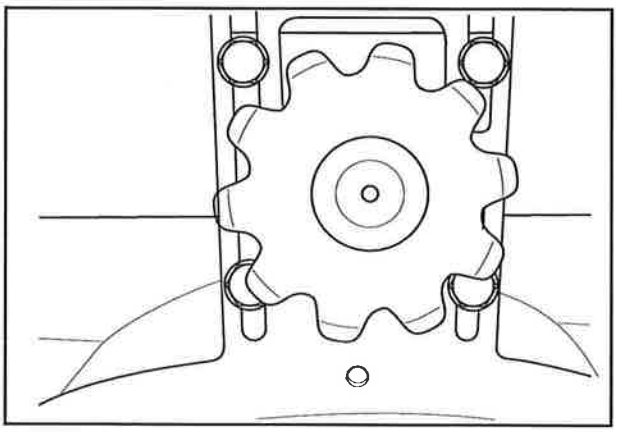

10

Position 2 for the device

2.5. Place the seal (1) and the grease nipple (2) in the hub.

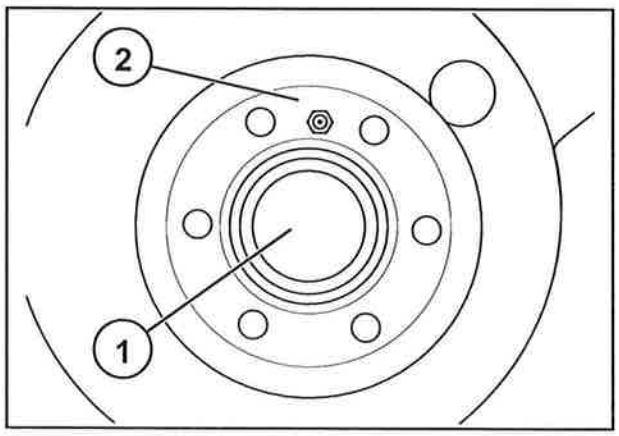

11

2.6. Install the extractor fan with bolts and lock washers and apply Loctite 262 adhesive.

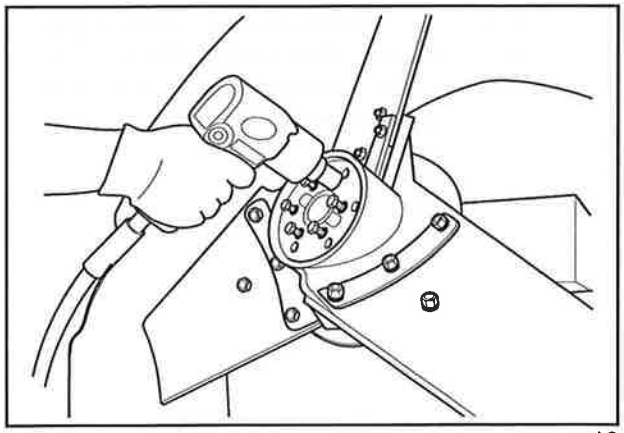

12

3. Assembling the hood on the extractor

3.1. First, apply grease on the extractor.

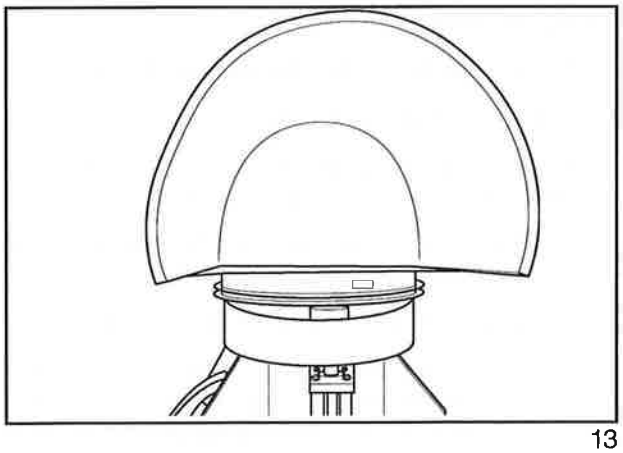

13

3.2. Install the STOP ring on the extractor to fasten the hood with bolts, nuts, washers and lock washers and apply Loctite 262.

NOTE: *The ring must be installed with its final adjustment upward.*

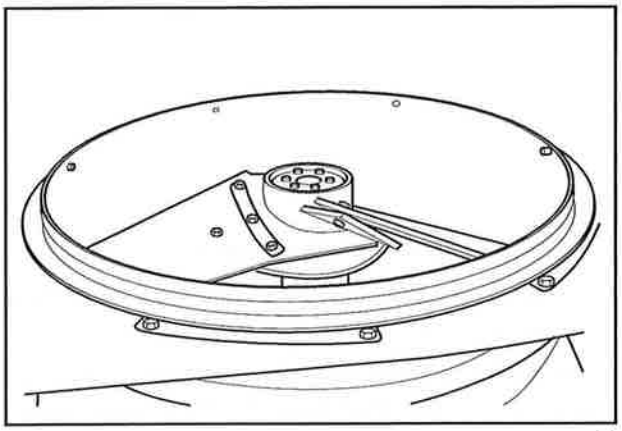

14

3.3. Pass the chain over the extractor teeth and connect it again.

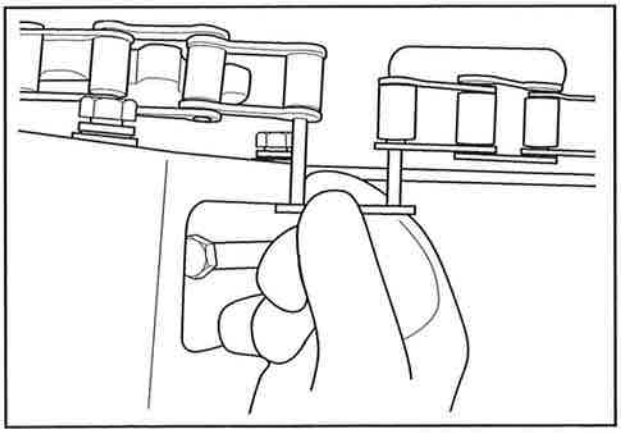

15

Stretch the chain by the bolt on the adjusting plate and turn the hood to check if there is any problem. After checking, fasten the nut of the adjusting plate bolt.

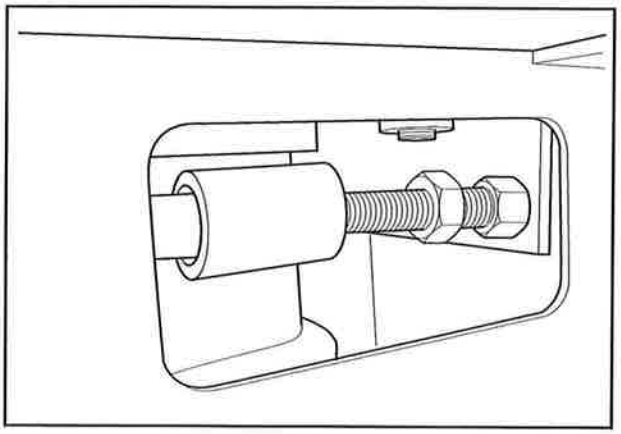

16

Fan Balancing

1. Remove the blades from the fan and clean the hub.
2. Inspect the hub for cracks.
3. Install new blades, bolts and nuts on the balanced hub. Apply Loctite 262 on the bolts.
4. Pull the blades outward against the bolts to eliminate any clearance on their holes.
5. Torque the bolts to 110-120 N.m (80-90 lb.ft.).
6. Assemble the fan hub on a balancing unit. Check the balance and, if necessary, correct it by grinding the blades tips. Do not add any weight to the blades, as the weld may cause distortions.

CAUTION DURING DISASSEMBLY

- *Check the bearings condition and replace them as necessary.*
- *Check the blades condition and replace them as necessary; be careful with the blades balancing.*

FRONT SUSPENSION

DESCRIPTION

Front Suspension

The hydraulic cylinder is, actually, the king pin with the stub axle mounted on its lower end. The rod clevis is installed on the chassis, under the cabin platform and the king pin lower part is supported on a ball bearing on the supporting block.

A dual radial arm with ball bearings connects the supporting block with the chassis.

A plate with four orifices fastens the radial arms. The front wheel hub is supported by tapered bearings and the rim can be removed from the hub.

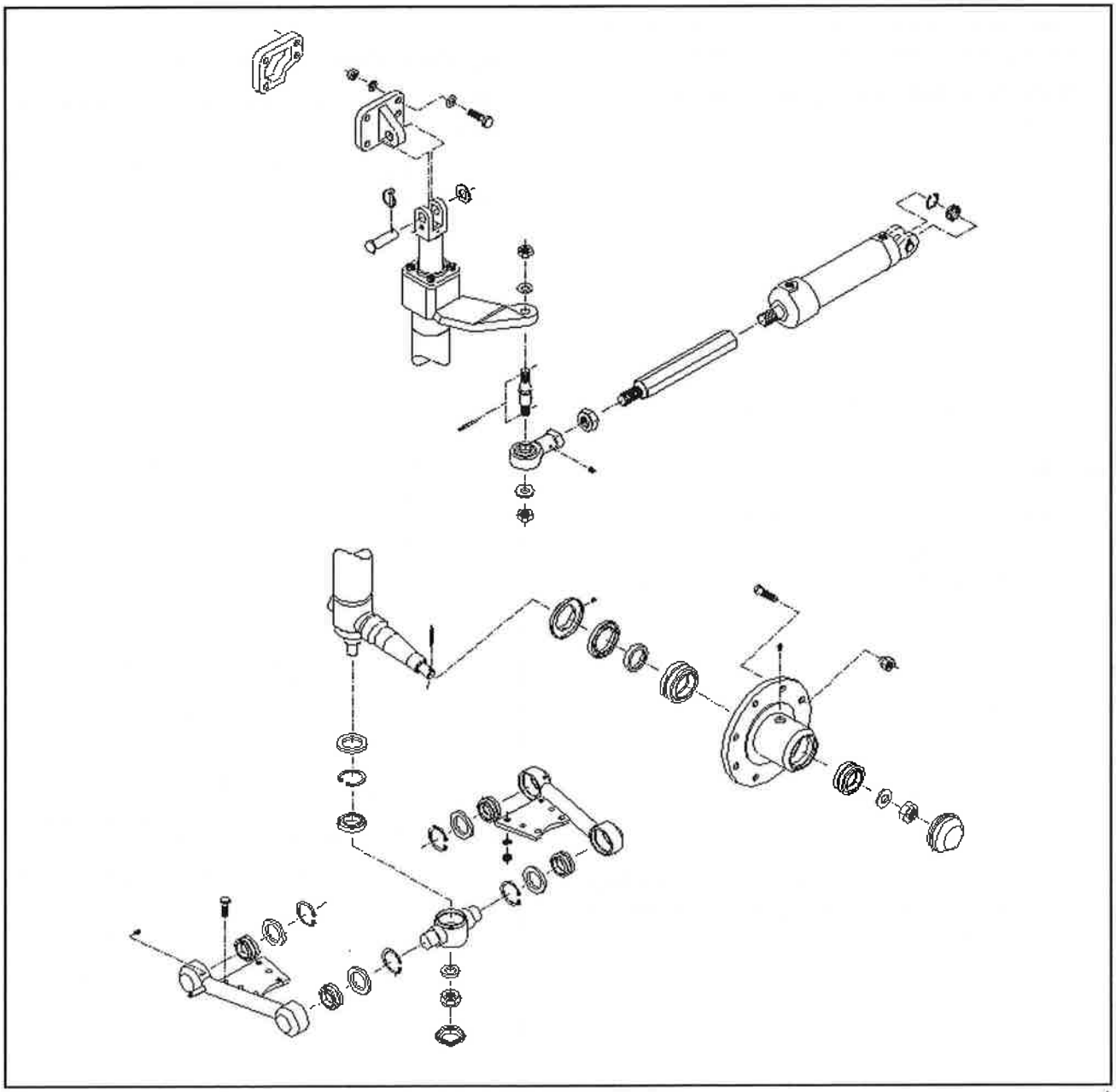

1

DISASSEMBLY

1. Lift the machine and block it. Retract the suspension cylinders until the tires are free from the ground.
2. Remove the protection cover from the wheel hub. Remove the cotter pin and release the lock nut, the outer bearing and the hub assembly with the front wheel.

   NOTE: *If the inner bearing remains on the stub axle, take care when removing the hub for the seal can contaminate the inner bearing with dirt.*
3. Push the control lever to allow the both suspension cylinders to extend all the way and, then, remove the hydraulic hoses and plug their ends.

   NOTE: Mark the hose fittings to identify the cylinder fittings.
4. Remove the rod end from the cylinder arm.
5. Remove the cotter pin, the nut and the king pin and remove it from the supporting block and support the cylinder.
6. Remove the lock bolt from the rod end and pull out the king pin, which will allow the cylinder to be removed from the machine.
7. Remove the four fastening bolts from the radial arm and separate it from the supporting block and from the main chassis. Check the bearings and replace them as necessary.

CAUTION DURING DISASSEMBLY

- *Check the bearings condition and replace them as necessary.*
- *Check seals' condition and replace them as necessary.*

ASSEMBLY

1. Front suspension pre-assembly

1.1. Install the bearing into the housing, tapping it all the way, until it seats on the housing lower face.

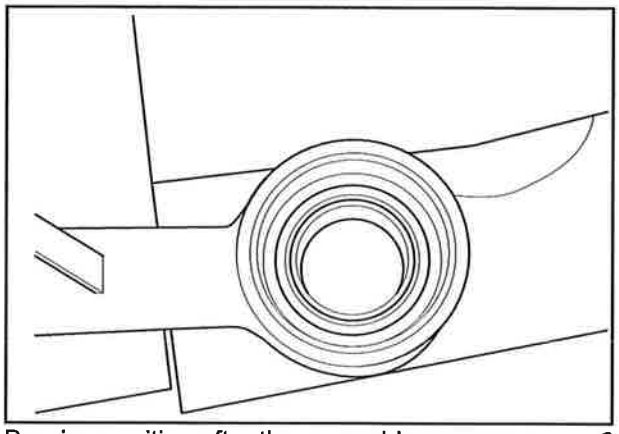

Bearing position after the assembly 2

1.2. Position the seal over the bearing with the help of a driver, tap it carefully until it passes the snap ring housing.

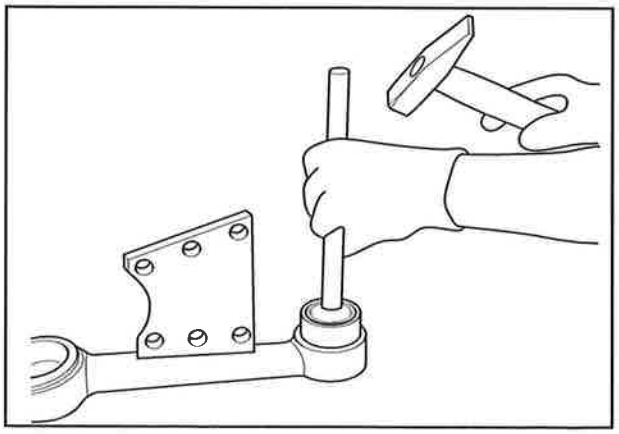

3

1.3. Position and install the snap ring.

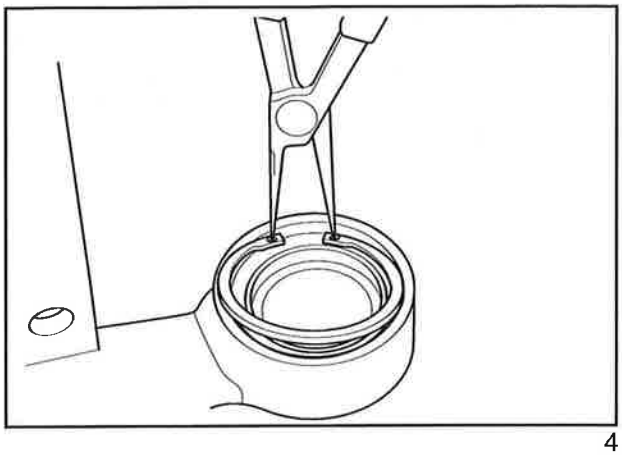

4

2. Pivots pre-assembly

2.1. Position the bearing and with the help of a driver, tap carefully to completely set it on the pivot bore.

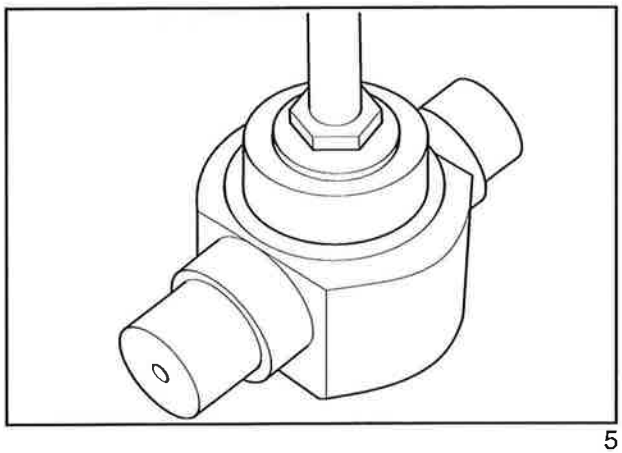

5

2.2. Place and assemble the snap ring on the pivot housing. Apply anti-seize on the housings.

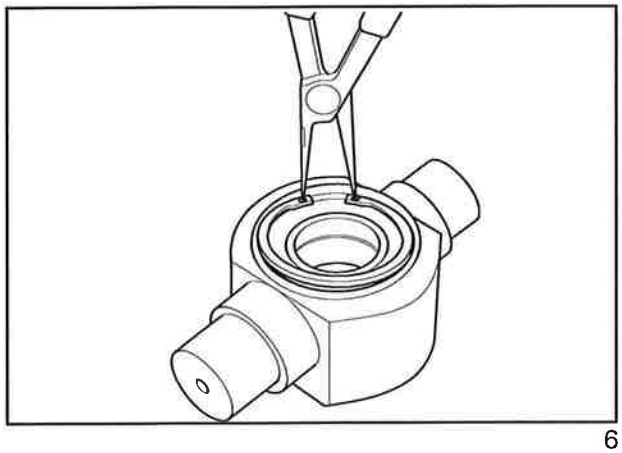

6

2.3. Position the seal in the housing and tap it carefully until the seal is completely set on its housing. The final position is flush with the housing upper face.

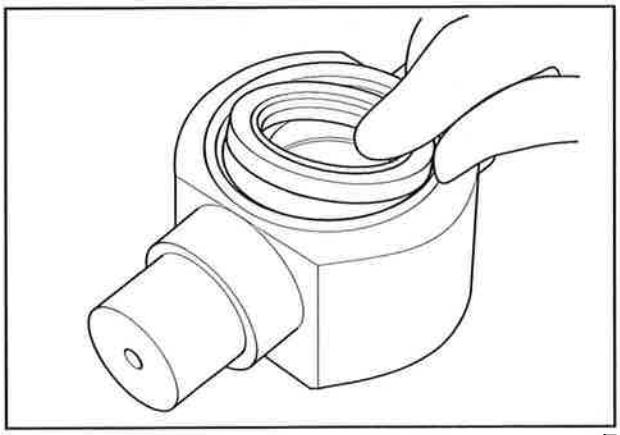

7

3. Front wheel hubs pre-assembly

3.1. Position and install the fastening bolts on the front wheel, tapping them until they are completely set in the hub bore.

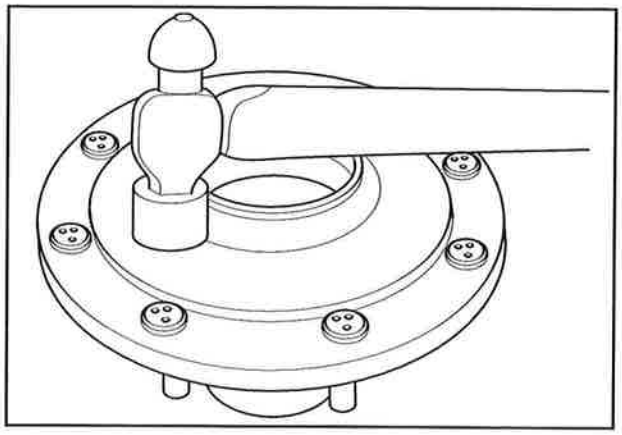

8

3.2. Apply anti-seize on the bearing housings and install the bearing cups, tapping them using a driver.

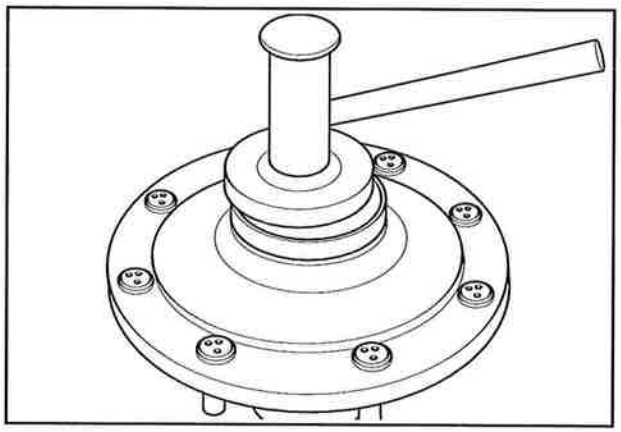

9

3.3. Turn the hub and apply anti-seize on the bearing housing, assembling the housing.

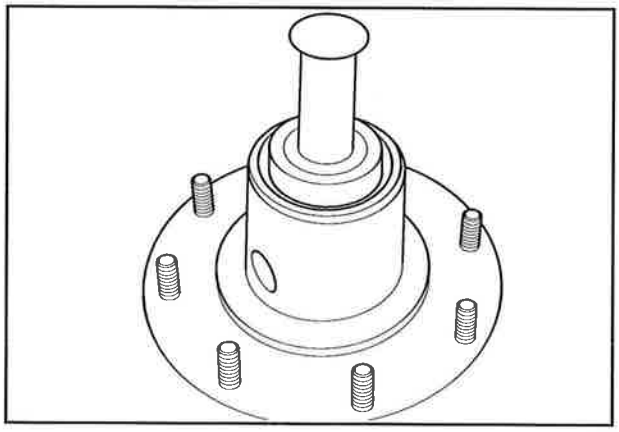

10

3.4. Turn the hub once again, install the bearing and them install the seal with the groove facing upward, flushed with the hub.

Turn the assembly one more time and position the bearing in the pre-assembled cup housing.

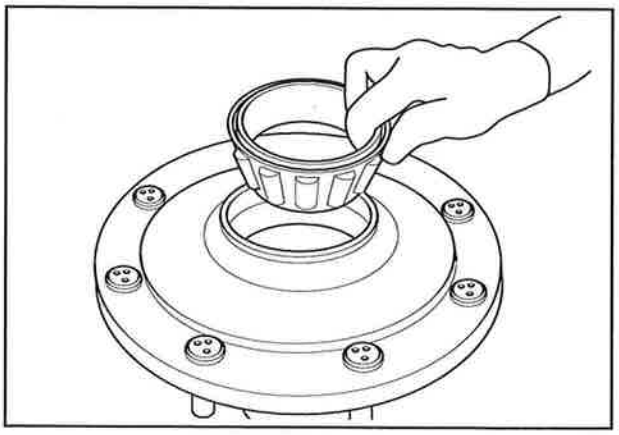

11

4. Mounting the assembly on the chassis

4.1. Position the bearing housings on the chassis shafts, tapping the bearings carefully for a perfect seating on the shafts.

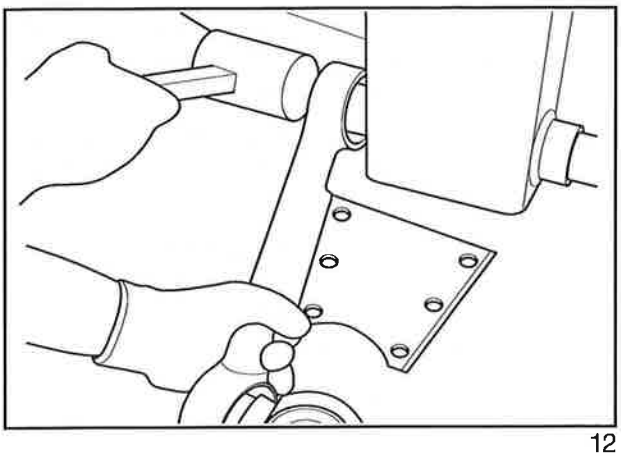

12

4.2. After properly installing the assembly , fasten it using M12 flanged nuts and bolts.

Apply Loctite 262 on the fastening and torque it to 120 N.m.

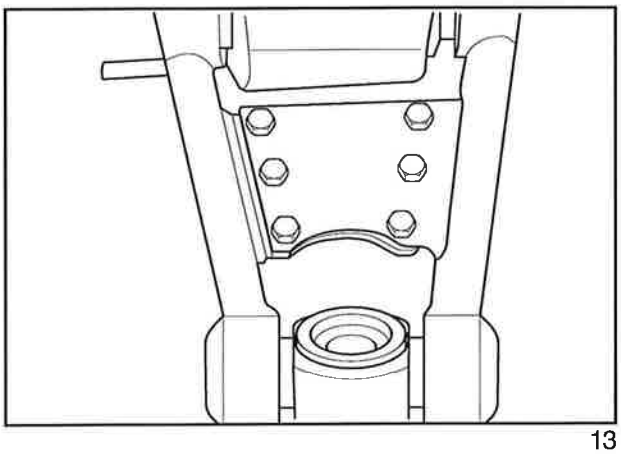

13

5. Installing the front suspension cylinder

5.1. Manually position the cylinder sustaining support (right side and left side) and fasten it to the chassis, using Nyloc nuts, bolts and plain washers.

5.2. Lift the suspension cylinder and fasten on the previously pre-assembled support using a pin, plain washer and lock pin.

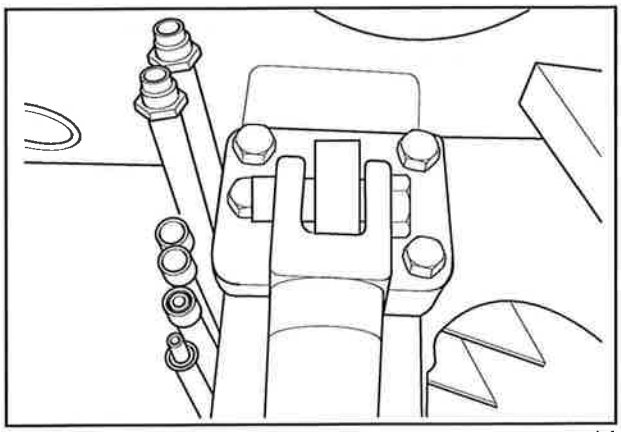

14

5.3. Using a support with the same height of the pre-assembled tray, install the threaded cylinder base into the tray pivot housing. Place the washer on the cylinder thread and torque it with a nut to 370 N.m. Close the assembly with the cover.

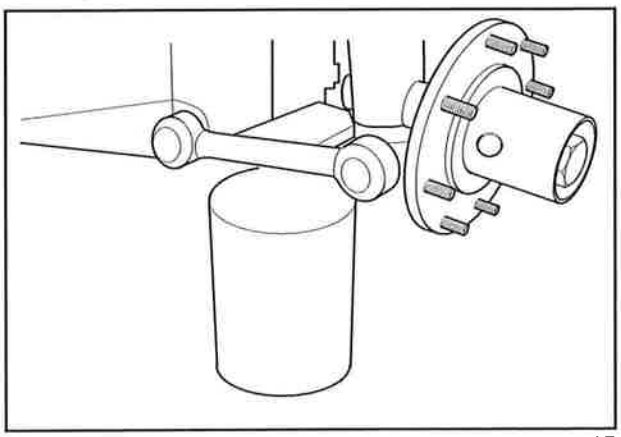

15

5.4. On the front wheel shaft end, install a metallic seal all the way on the shaft and fasten it with a bolt. Apply Loctite 262.

Position the pre-assembled hub in the shaft housing until it touches the metallic seal. Place the washer and install the nut.

Tighten the nut again until it touches the bearing; make sure that the nut is aligned with the shaft hole to install the lock pin, observing a **100 N.m Min.** and **120 N.m Max** load.

Lock the assembly with the cotter pin. Close the assembly with the cover.

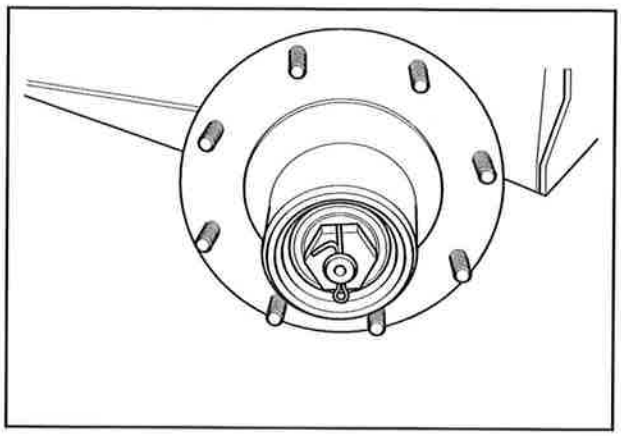

16

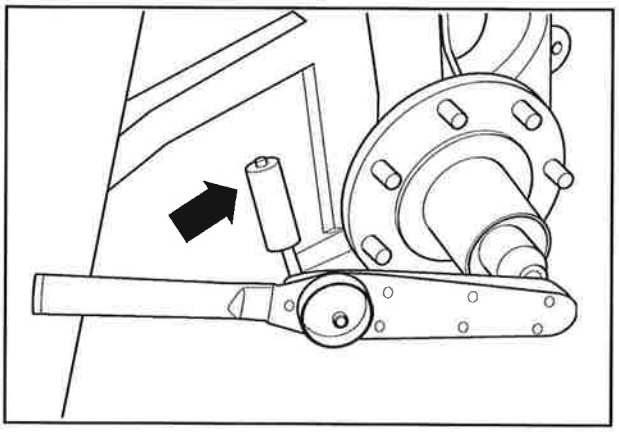

17

5.5. After assembled, check the assembly for the clearance and turning; clearance allowance is zero.

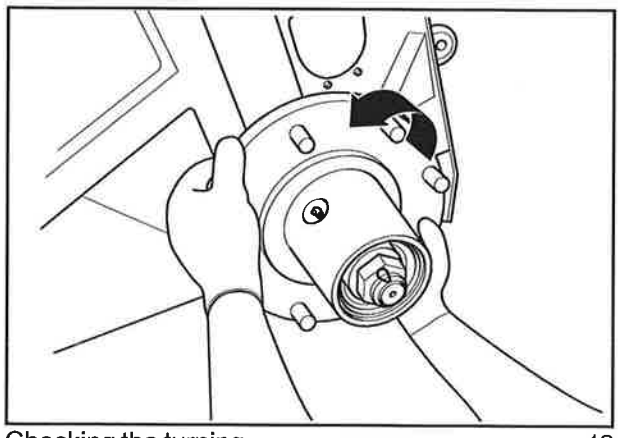

Checking the turning 18

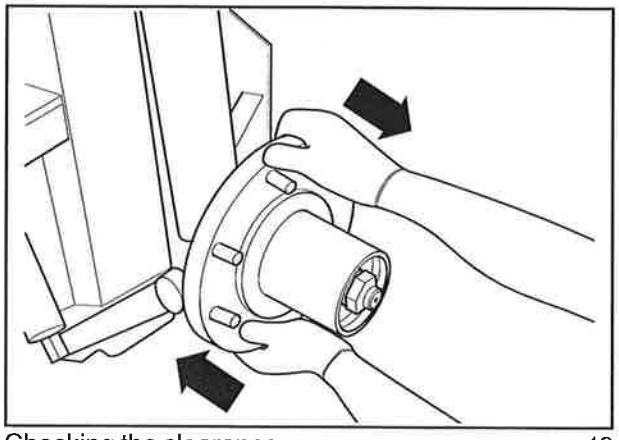

Checking the clearance 19

5.6. Position and assemble the height marker cylinders, fastening them to the chassis with bolts and nuts. Place the pre-assembled pin in the cylinder on the tray and lock it, using plain washer and lock pin.

5.7. Position and assemble the grease nipples.

IMPORTANT: *FOR SAFETY REASONS, AFTER INSTALLED, THE ASSEMBLY MUST BE ON THE CYLINDER FINAL DISPLACEMENT POSITION, I.E., TOTALLY LOWERED, SO PREVENTING THE RISK OF ACCIDENTS DURING THE HANDLING IN NEXT PROCEDURE.*

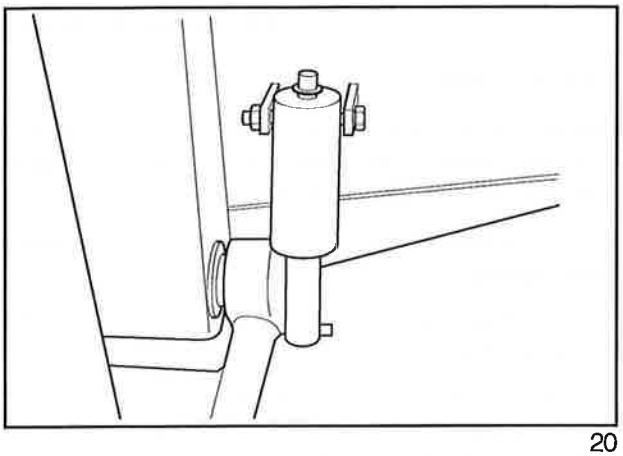

20

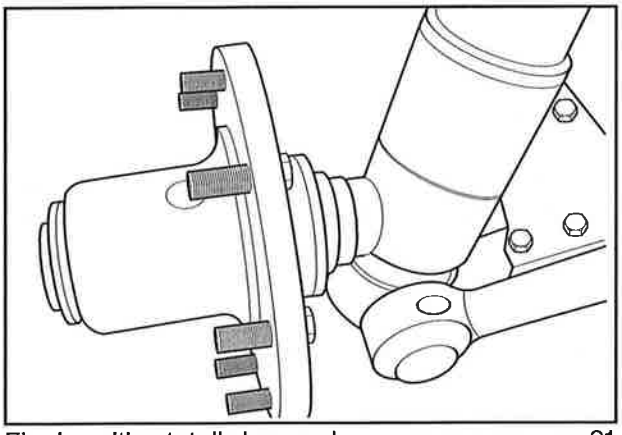

Final position totally lowered 21

Steering wheel

The steering wheel is controlled by two PTE hydraulic cylinders.

They are connected to the chassis by a pin with a ball joint and to the suspension by a spherical rod end.

There is an adjusting bar between the spherical rod end and the cylinder rod.

Cover and protect the cylinder before starting the repair.

PUMP GEARBOX (FOUR-HOLE GEARBOX)

DESCRIPTION

The gearbox with four holes is a strong construction gearbox, designed to ensure a trouble free operation with less maintenance services.

It is composed of an input gear which drives three output gears.

The hydraulic pumps are assembled on the gears hubs through splines.

In order to absorb loads from impacts, its operation by the engine flywheel is transmitted to the input shaft through a driving spring plate.

Gears Ratio

To allow the use of several engines and reach the maximum rotation speed, the gearbox can be assembled with different gears in order to keep the pumps rotary speed. This allows the use of the same pumps (except for pump directly driven by the central) in all machines, no matter which engine type is being used.

Before overhauling the gearbox, make sure you have the correct gears at hand.

2,100 RPM Engines:

Cummins M11 and Scania DC9, IVECO Cursor 9 and 10: Gear ratio – 1.17:1

Drive gear: 76 teeth

Output gear: 65 teeth.

ASSEMBLY

1. 4. Holes Gearbox Assembly

1.1. Apply Loctite 262 on the bearing inner side.

NOTE: *Before applying Loctite 262, clean the bearing with Loctite 7070.*

DISASSEMBLY

Removing the Gearbox from the Engine

1. Clean the engine compartment and close all valves from the hydraulic oil reservoir.
2. Disconnect all hoses, vacuum and pressure lines and close all opened fittings.
3. Remove all pumps from the case, after draining the oil from the gearbox.
4. Support the gearbox and remove the bolts fastening the case to the engine. Move the gearbox away from the drive plate and remove it from the harvester.

Disassembly

1. Release the fastening bolts and remove the cover from the gearbox.
2. Remove the gears and bearings from the gearbox.
3. All bearings and gears must be inspected for wear and replaced as necessary.

CAUTION DURING DISASSEMBLY

- *Check the seal condition in the gearbox and replace it if necessary.*
- *Check leaks on the gearbox outer side and replace the gasket if necessary.*
- *Clean the breath.*
- *Check the bearings condition and replace them as necessary.*
- *Check the gears condition and replace them as necessary.*
- *Check the splines of the gears.*

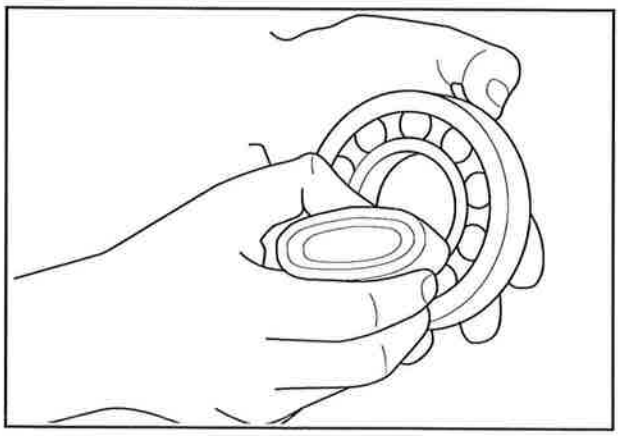

1

1.2. Install the bearings on both sides of the gear.

NOTE: *Apply Loctite 262.*

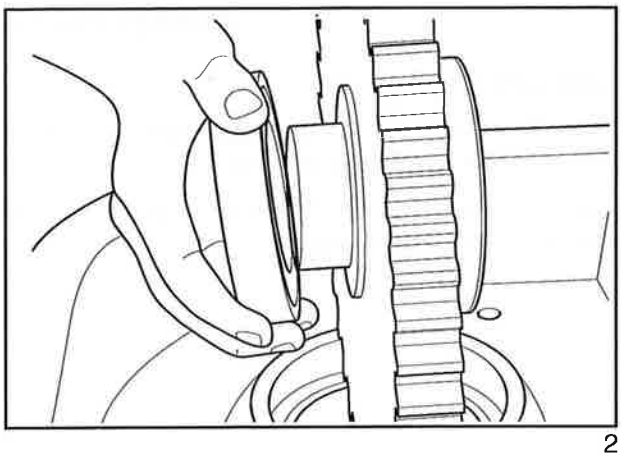

2

1.3. Install the gear in the gearbox housing.

1.4. Install the cover on gearbox, using Ultra Black 598.

1.5. Lock the gearbox using bolts.

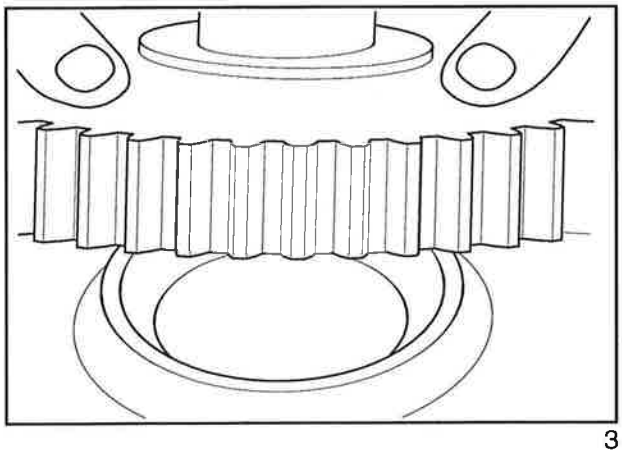

3

Installing the gearbox on the engine

The assembly is performed in reversal order of disassembly.

Before starting the engine, make sure that the reservoir valves are totally open and the air bleeding was performed for the suction lines. The Eaton pump oil pump must be filled with oil too.

REDUCTION HUB MODEL 40 – A8000

DESCRIPTION

The unit comprises a hub assembled on a shaft screwed on the machine chassis.

Assembled on the hub, there is a set of "double epicycle" type reduction gears.

The reduction hub is driven by an Eaton hydraulic motor coupled to a shaft on which a disc brake is assembled. The reduction rate is 35:1.

The planetary gears assembly can be removed without the need of removing the rear wheel; to remove the hub assembly, the rear wheel must be removed.

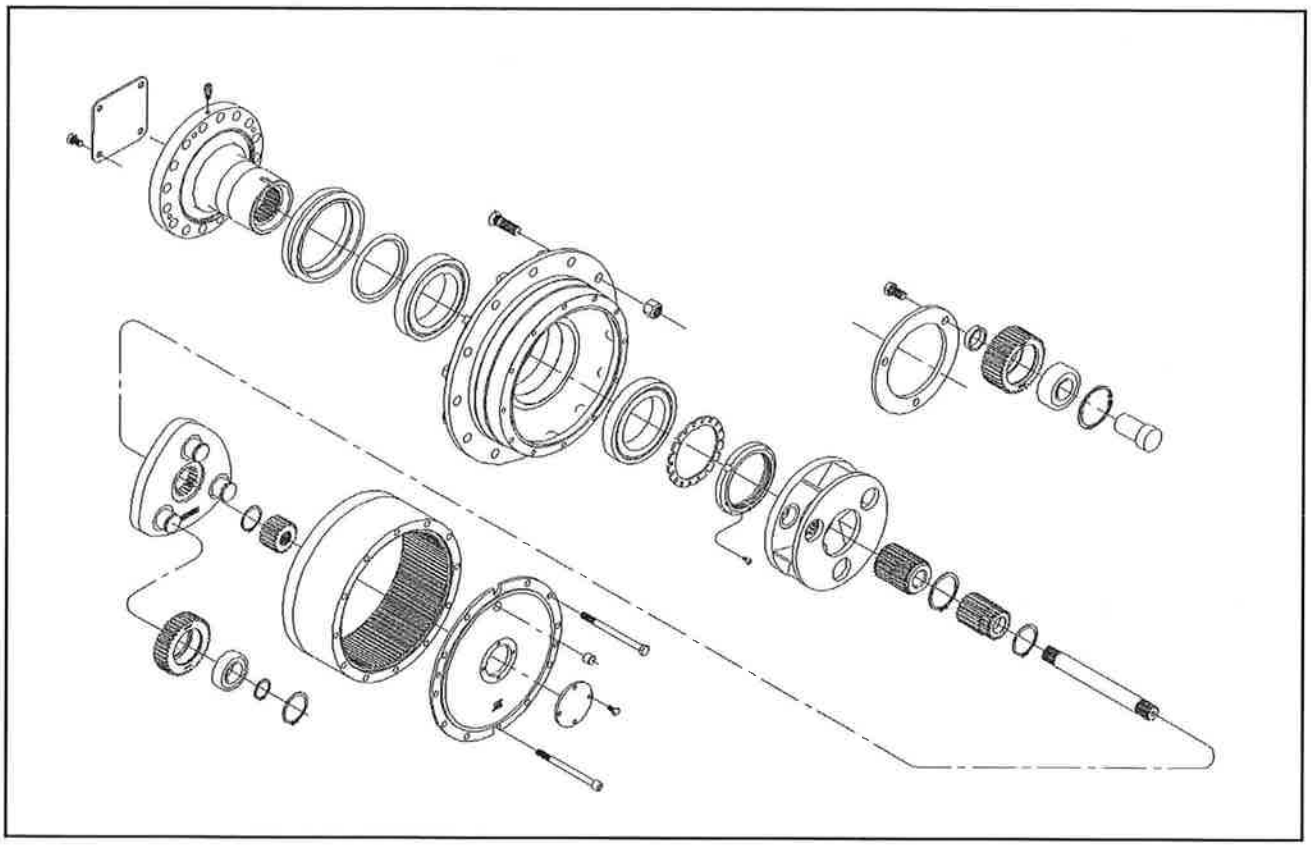

1

DISASSEMBLY

1. Wipe off foreign material from the hub and drain the oil from the unit.
2. Unfasten the bolts fastening the cover and remove the cover.

   NOTE: *Two Allen bolts must remain installed to keep the ring gear in place.*
3. Remove the gear and the shaft. The primary and secondary planetary supports must be removed after this procedure.
4. The ring gear is screwed to a shaft in the hub and can be removed by unfastening the two remaining bolts.
5. The gears are fastened to the planetary pins by snap rings: remove the rings and release the gear and bearing assembly.
6. The snap rings fastening the bearing to the gear can be removed for the bearing removal.

7. Check the bearings and the gears and replace them as necessary.
8. The planetary pins are pressed in with interference to the support, and they must be replaced if there is any loose pin.
9. The secondary planetary gears and bearings are positioned on two faces supported by pins, fastened by bolts and a retaining plate on the rear side of the support.
10. The snap rings fastening the bearing to the gear can be removed for the bearing removal.
11. Check the bearings and the gears and replace them as necessary.
12. The coupling and the secondary pinion are fastened to the secondary support by a snap ring.

Total Disassembly of the Hub

1. With the basecutter on the ground, place appropriate blocks under the rear chassis, as close as possible to the end.
2. The elevator must be on the rear side on the machine. Lift the basecutter until the rear wheels are free from the ground.
3. Block the front suspension rod using iron bars, in order to avoid the cylinder from lowering or unbalancing the machine.
4. Drain the oil from the hubs and disassemble the planetary sections, as described on "Disassembly of Planetary Reduction" section.
5. Remove the bolt and nut (it may be necessary to heat the area to break down the Araldite). Remove the hub, taking care to not damage the seal.

   NOTE: *If the sealing has been removed, protect its face in order to avoid damages to the seal.*
6. Remove the breath hoses.
7. Remove the fifteen bolts fastening the upper shaft to the chassis (the nuts are located on the outer side); the bolts can be left on the place.
8. Remove the four bolts fastening the upper shaft to the brake assembly.

   Clean all components and check them for wear or damages; replace them as necessary.

Removal of Reduction Hub Assembly, Brakes and Drive Motor

1. With the basecutter on the ground, place appropriate blocks under the rear chassis, as close as possible to the end.
2. The elevator must be on the rear side on the machine. Lift the basecutter until the rear wheels are free from the ground.
3. Block the front suspension rod using iron bars, in order to avoid the cylinder from lowering or unbalances the machine.
4. Remove the rear wheel assembly.

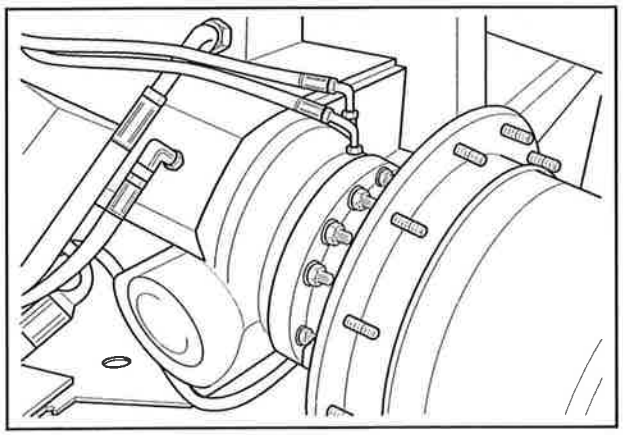

2

5. Disconnect the hoses from the brake assembly and plug their ends.
6. Disconnect the hoses from the motor drain and plug their ends.
7. Remove the drain fittings and plug them.
8. Remove the power lines from the motor, including the elbows, and plug the hoses and the ports on the motor.
9. Remove air breather hose from the hub.
10. Remove the fifteen nuts from the bolts fastening the assembly to the chassis.
11. Remove the hub assembly, the brake and the motor from the chassis.

CAUTION DURING DISASSEMBLY

- *Check the conditions of the bearings and seals.*
- *Invert the hub ring gear, transferring it from the left side to the right side and vice-versa.*
- *Check the gears condition and replace them as necessary.*
- *Clean the motor and check them for leaks and the shafts and splines condition.*

ASSEMBLY

1. Installing the bearing on the shaft sleeve

1.1. Apply Loctite 262 on the bearing cup.

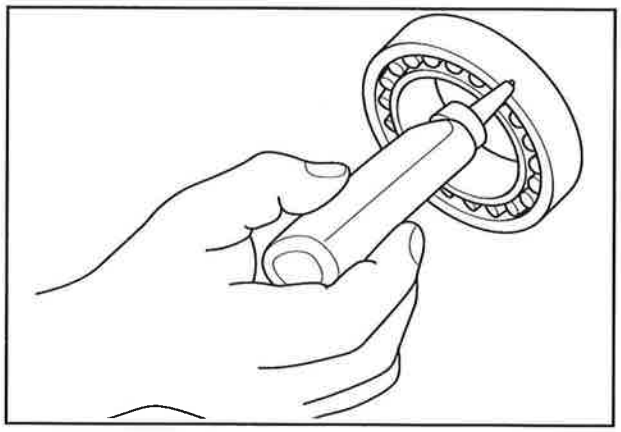

3

1.2. Install the bearing cup onto the housing by tapping it.

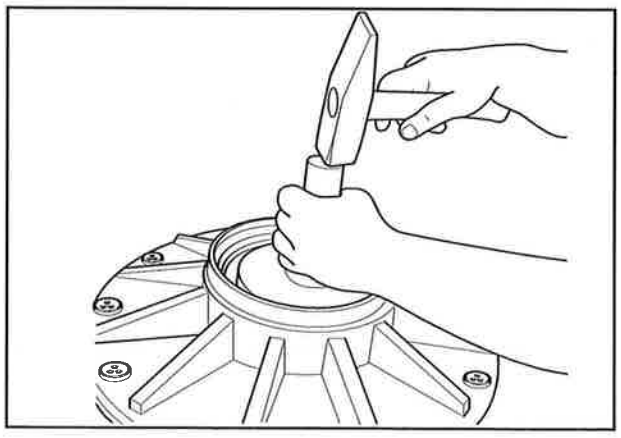

4

1.3. Assemble the shaft on the hub.

1.4. Install the lock plate and the nut.

1.5. Apply a pre-load of 9 kg for new bearings and 7 kg for used bearings.

NOTE: *To tighten them, use the special tool D0334.*

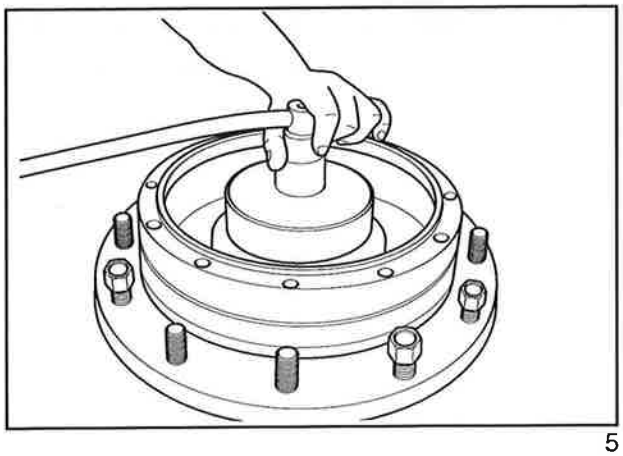

5

1.6. Mark the point related to the pre-load position.

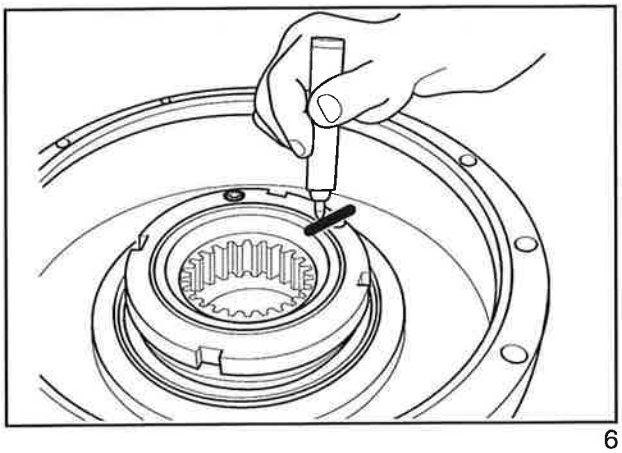

6

1.7. Unfasten the nut.

1.8. Install the seals.

NOTE: *Take care to avoid damages to the o-ring when using tools with sharp tips.*

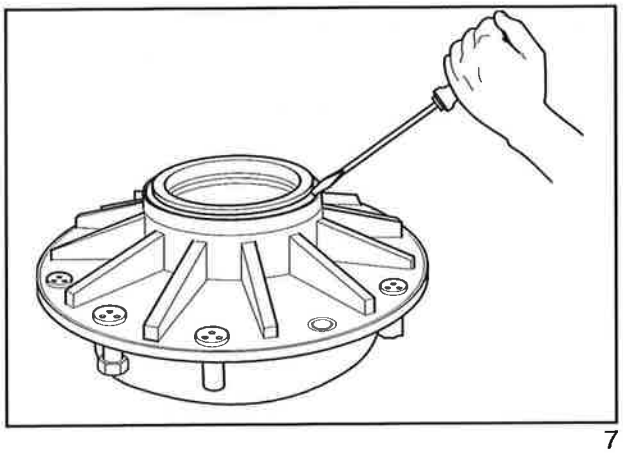

7

1.9. Install the splined ring.

1.10. Apply Araldite on the nut and torque it until the marks are matching.

1.11. Apply Loctite 271 on the mounting bolts of the lock nut.

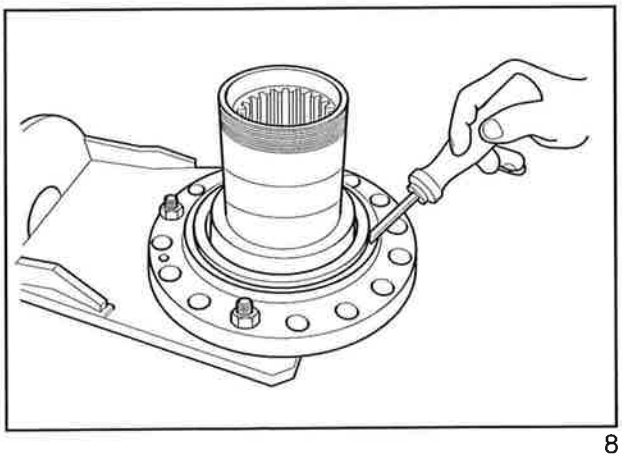

8

2. Assembling the secondary planetary assembly

2.1. Install the pinion on the satellite carrier.

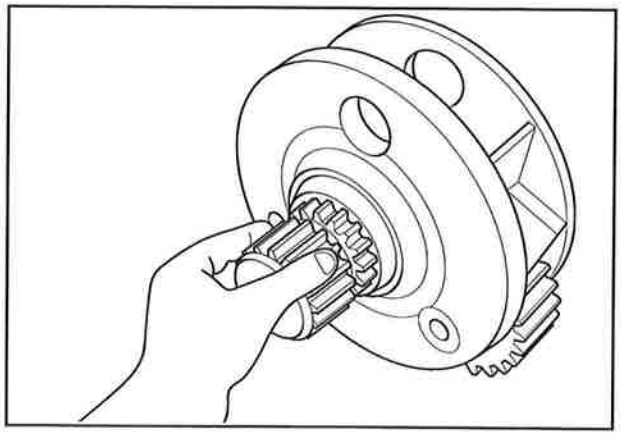

9

2.2. Install a snap ring on the pinion.

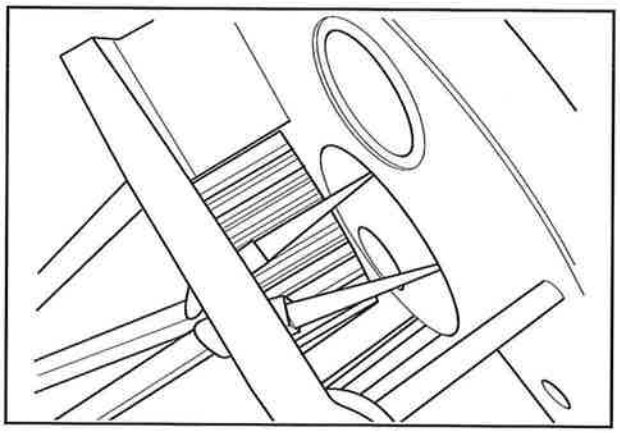

10

2.3. Apply Loctite 262 on the bearing cup and assemble it on the planetary gear.

2.4. Assemble the gears with the snap rings and the spacer facing the pinion side.

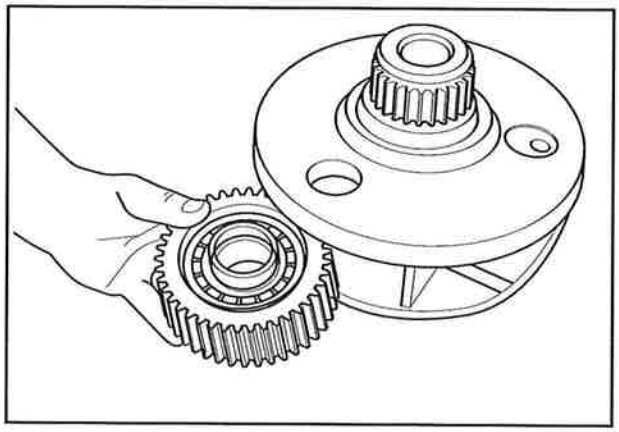

11

2.5. Place the pin.

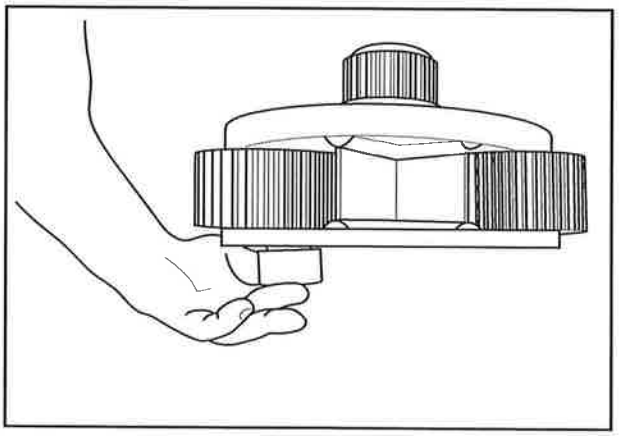

12

2.6. Apply Loctite 262 on the bolts.

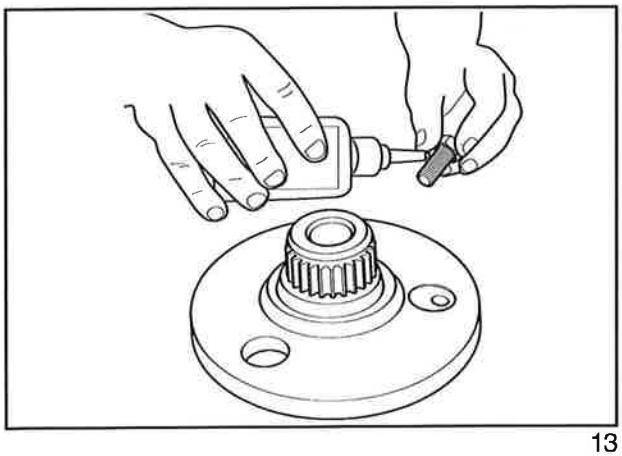

13

3. Assembling the primary planetary assembly

3.1. Apply Loctite 262 on the bearing cup and assemble it on the planetary gear.

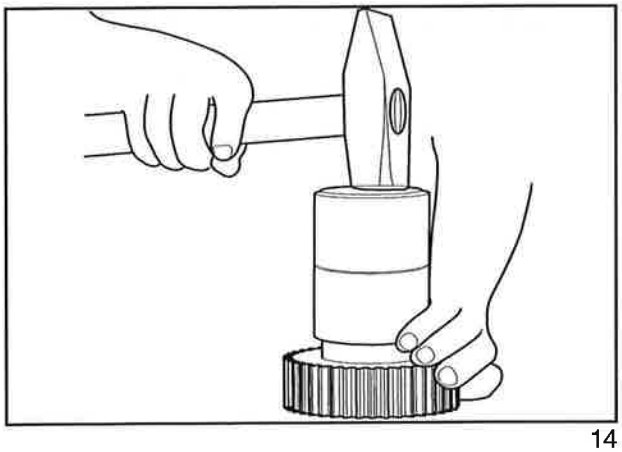

14

3.2. Install snap ring.

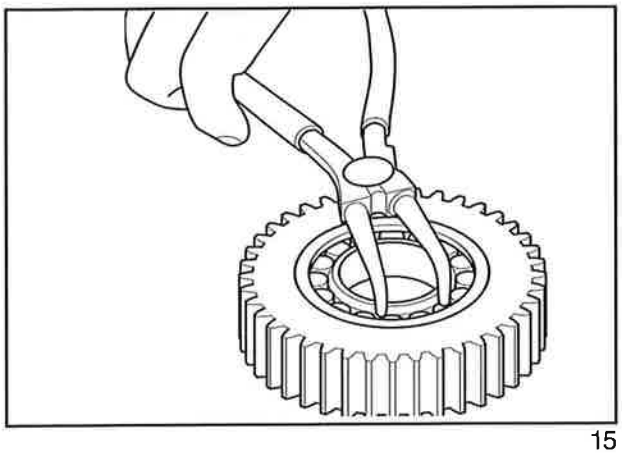

15

3.3. Place the gear on the satellite carrier.

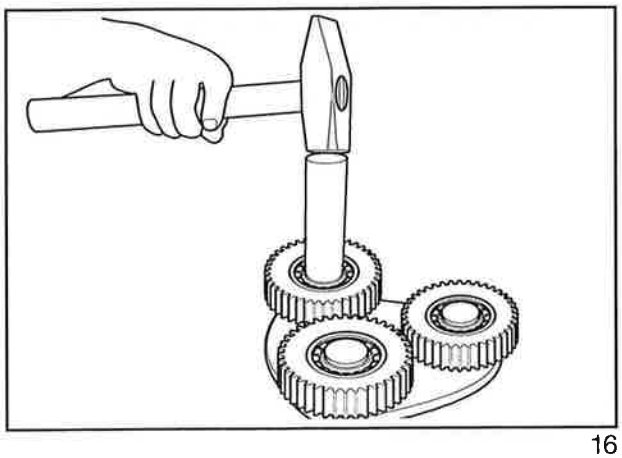

16

3.4. Install snap ring.

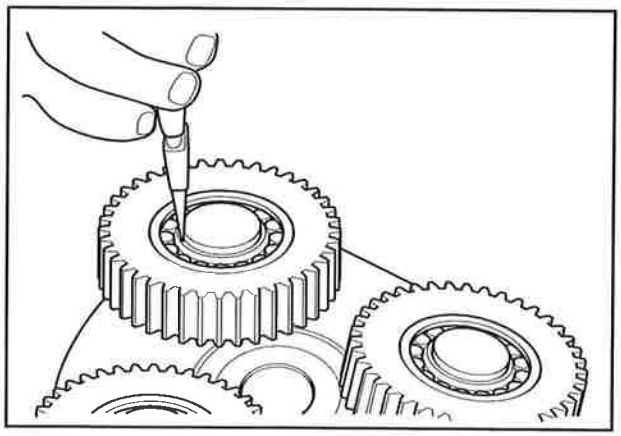

17

4. Installing the planetaries on the hub

4.1. Install the secondary planetary on the hub.

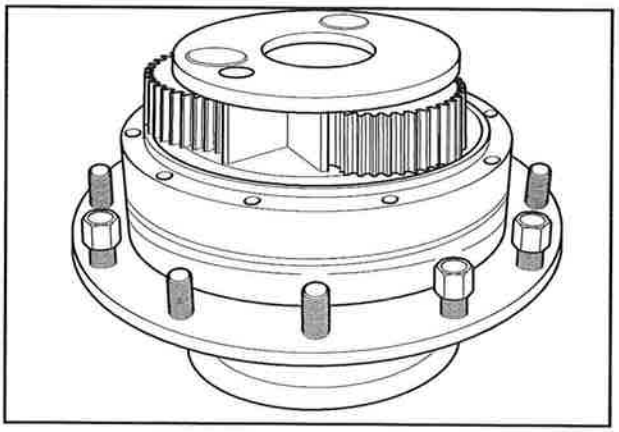

18

4.2. Apply Loctite 515 on the hub.

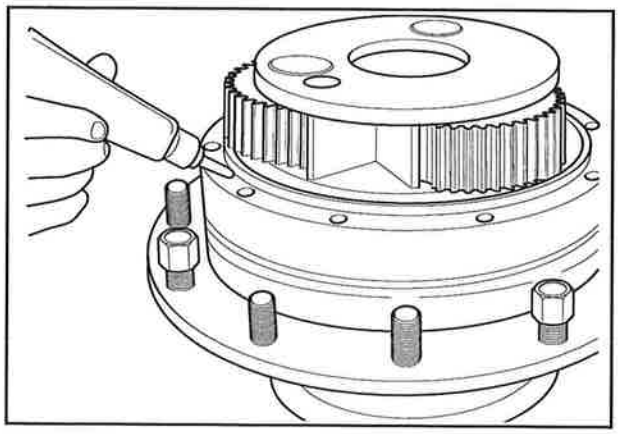

19

4.3. Install the ring gear with the largest counterbore facing in.

4.4. Install the Allen bolts and torque them to 110 N.m.

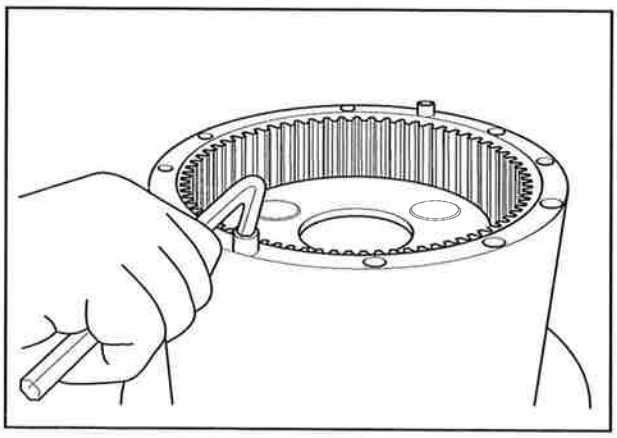

20

4.5. Install the primary planetaries on the assembly.

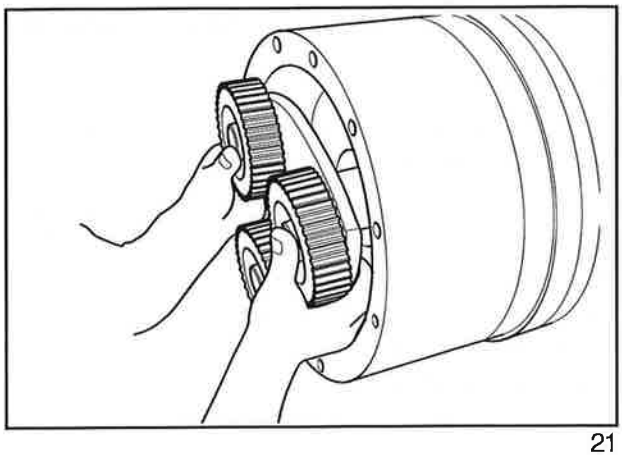

21

4.6. Apply Loctite on the hub, before installing the cover.

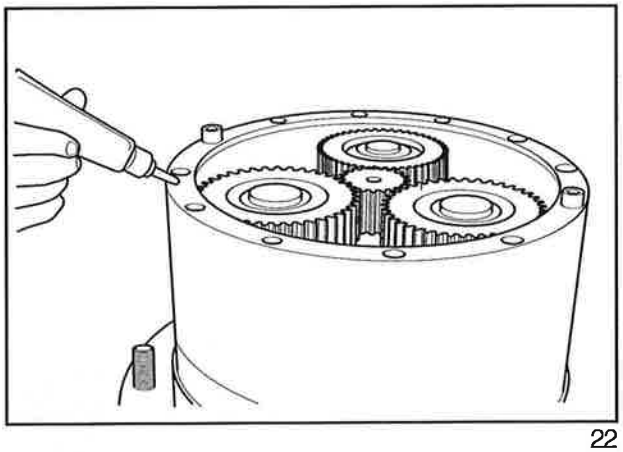

22

4.7. Install the cover and torque the bolts to 110 N.m.

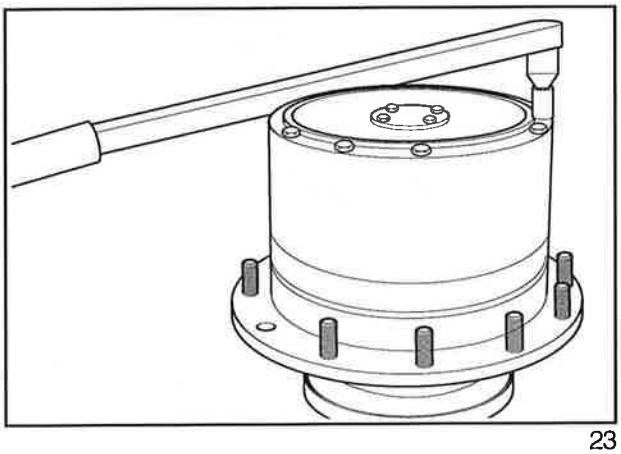

23

4.8. Install the breath on the shaft sleeve.

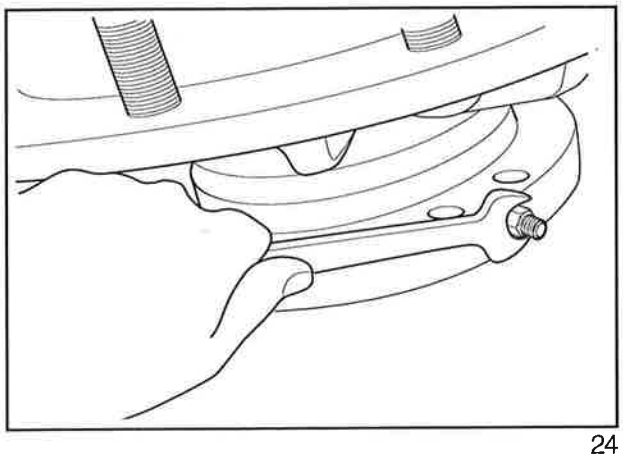

24

SAFETY BRAKE (WET BRAKE) – A8000

DESCRIPTION

The brake system on this harvester is composed of discs on total oil "bath".

The system works with hydraulic oil coming from the circuit of the transmission charge pump, which eliminates the need to use a specific brake fluid.

This brake is actuated by pedals on the cab's floorboard by blocking the pressure oil in the brake, which turns it into a safety brake.

Safety Brake Operation

Press the pedals to apply the brakes. There will be no pressure from the spring. The right pedal applies the brake to the right rear wheel and the left pedal applies the brake to the left rear wheel.

WARNING: *For a total braking action, both pedals must be simultaneously pressed. The pedals should only be applied individually in order to help the operator turn in tight places.*

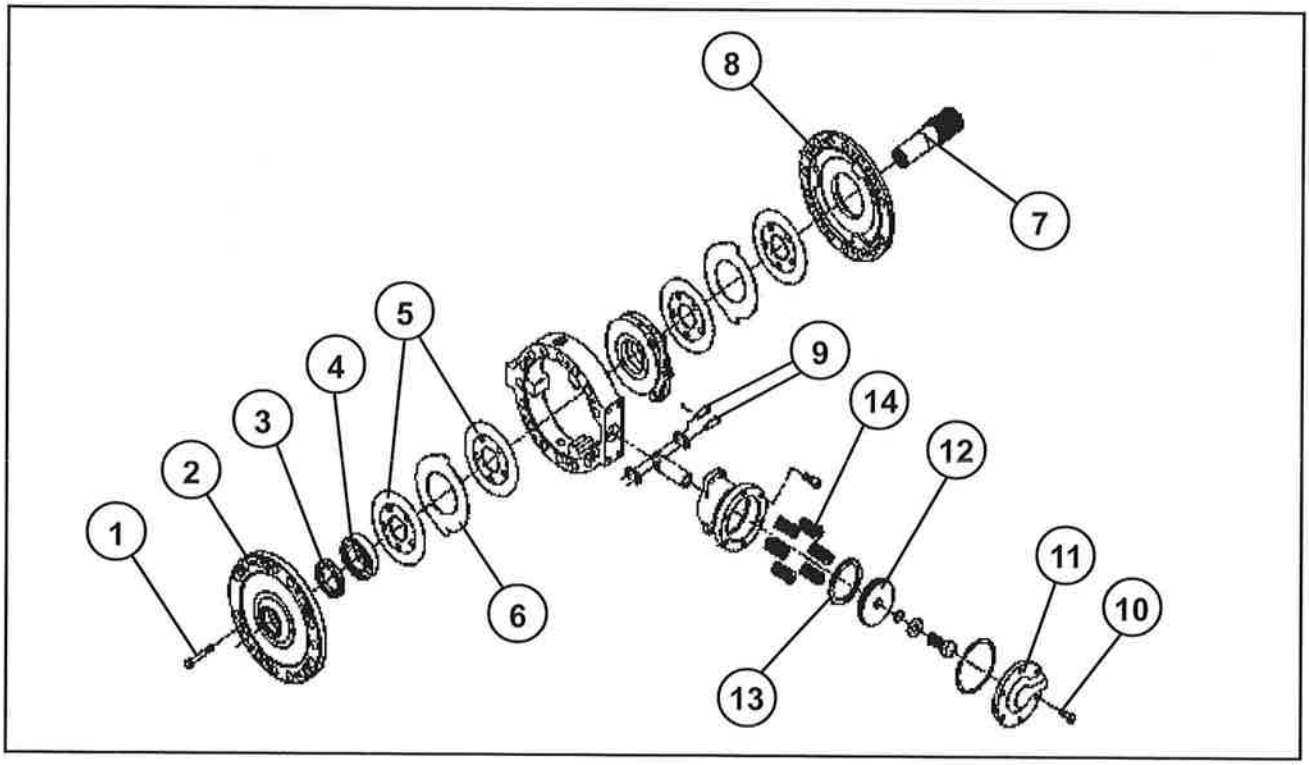

1

1 - Bolt
2 - Outer plate
3 - Seal
4 - Bearing
5 - Slip discs
6 - Separator
7 - Shaft
8 - Inner plate
9 - Union pin
10 - Bolt
11 - Cover
12 - Piston drive
13 - Rubber ring
14 - Spring

DISASSEMBLY

Disc Removal

1. With the basecutter on the ground, place appropriate blocks under the rear chassis, as close as possible to the end.
2. The elevator must be on the rear side on the machine. Lift the basecutter until the rear wheels are free from the ground.
3. Block the front suspension rod using iron bars, in order to avoid the cylinder from lowering or unbalances the machine.
4. Remove the reduction hub assembly by removing the fifteen nuts from the mounting bolts on the hub/ brake and the four mounting bolts for the hub on the brake.
5. Disconnect the hydraulic hose and plug it.
6. Remove the reduction hub from the assembly.
7. To release the spring tension, connect the air hose on the piston cover.
8. Remove the bolts (1) from the outer plate (2) and remove the plate. So, it is possible to remove the seal (3), the bearing (4), the slip discs (5) and the slip discs separator (6).
9. Remove the coupling shaft (7) in order to allow the inner plate (8) removal, gaining access to the two other slip discs and their separator.
10. With the system pressurized, remove the union pins (9) and after this, the system can depressurized by disconnecting the air hose from the assembly.
11. With the system depressurized, remove the bolts (10) from the piston cover (11) and remove the cover to gain access to the piston drive (12), rubber ring (13) and springs (14).
12. Assembly in the reverse order of the procedure above.

NOTE: *For the hydraulic brake disassembly, check the friction discs for wear and the bearings for leaks on the assembly sealing. Replace them as necessary.*

CAUTION DURING DISASSEMBLY

- *Check the assembly for leaks.*
- *Check the bearings for wear and replace them as necessary.*
- *Check the piston repairing and replace them as necessary.*

ASSEMBLY

1. Install the springs in the housing.

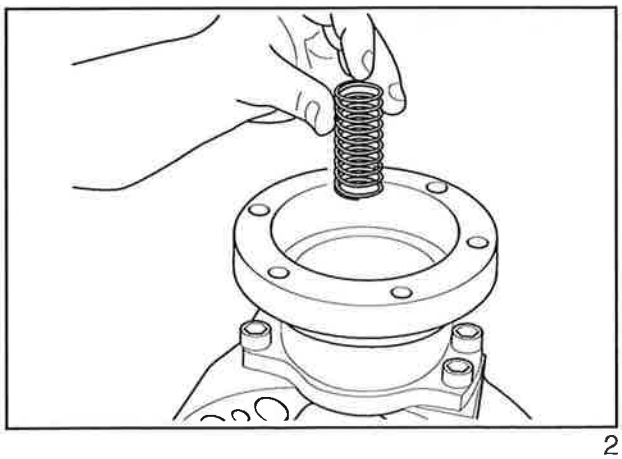

2

2. Install the piston.

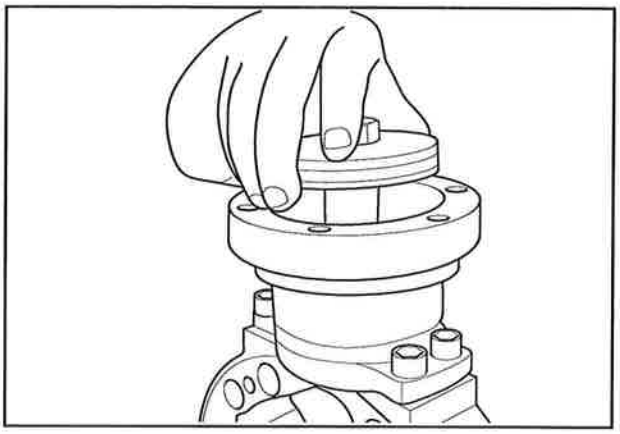

3

3. Push the piston in with the pulley driver until the hole for the link fitting reaches a position that allows an easier assembly.

   NOTE: *The recess on the piston arm must be installed on the housing circumference direction.*

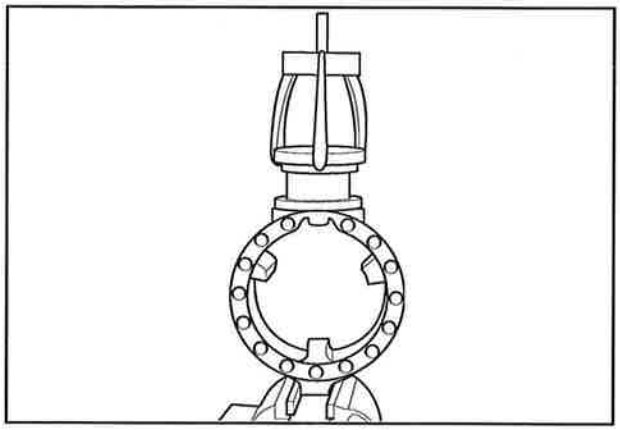

4

4. Install the secondary brake.

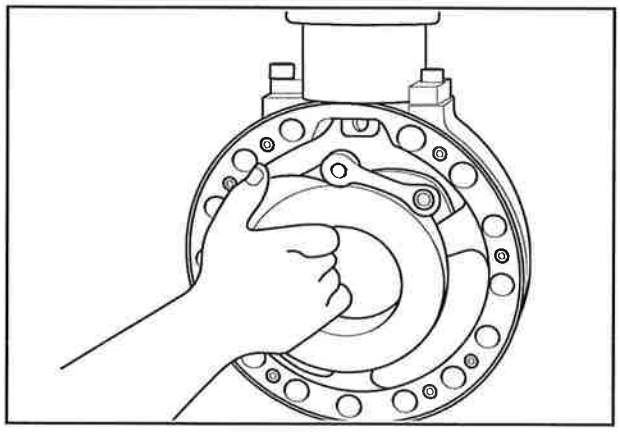

5

5. Install the link.

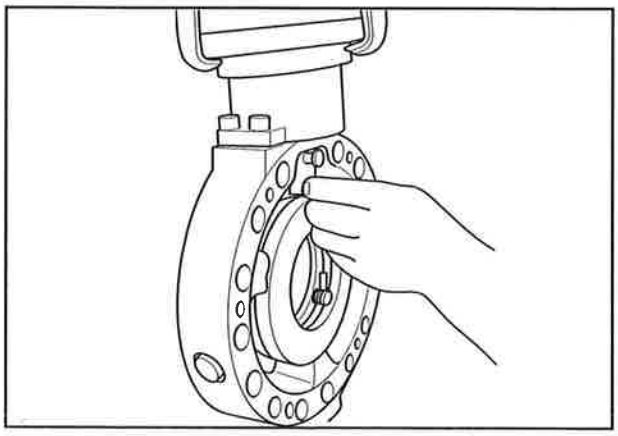

6

6. Fit the shaft on the cover.

   NOTE: *When using the steel hammer, be careful to avoid damages on the shaft.*

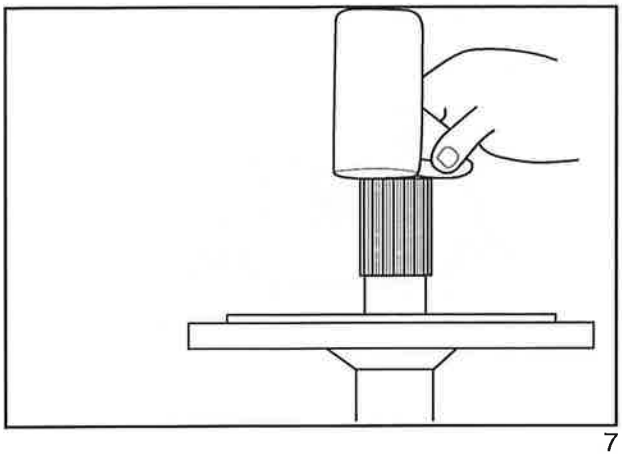

7

1. Assembling the discs

1.1. Start by the discs (splined), then the spacer (disc with tabs) and the disc (splined) once again.

   NOTE: *The plain disc teeth must touch the tab on the housing.*

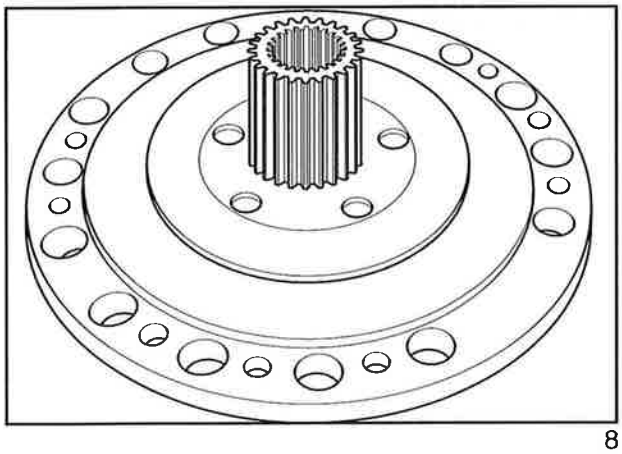

8

1.2. Place the cover on the right position, lay down the assembly and install the splined discs and the spacers.

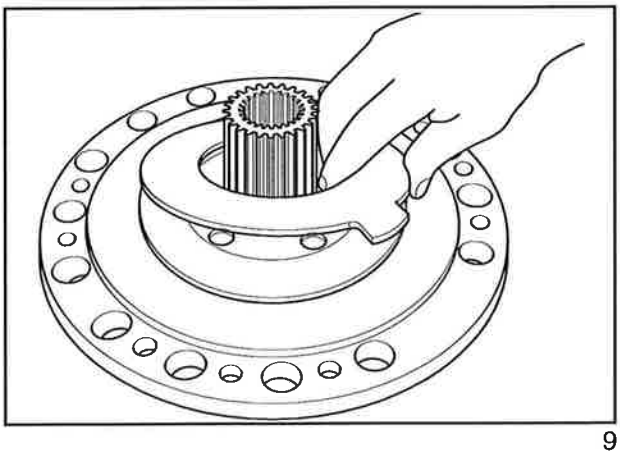

9

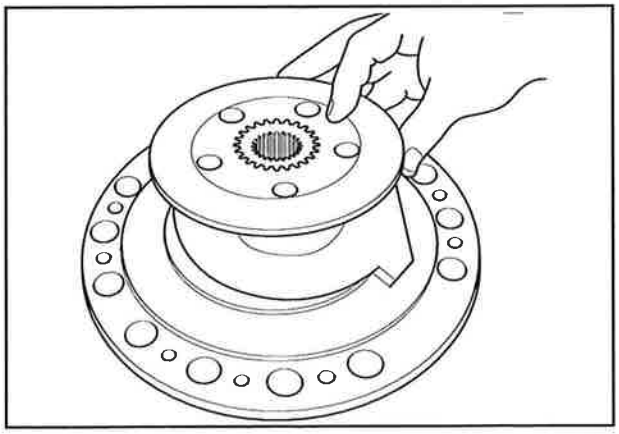

10

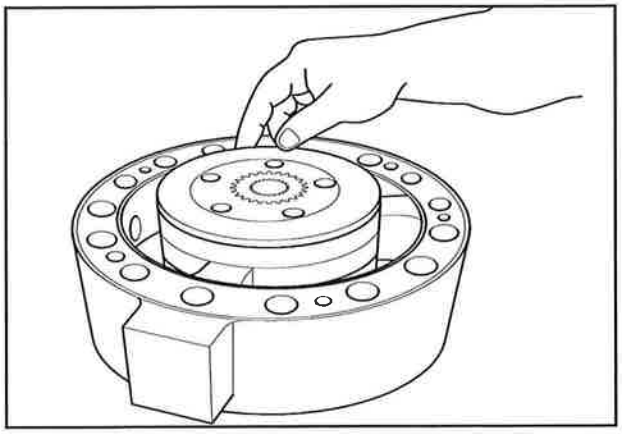

11

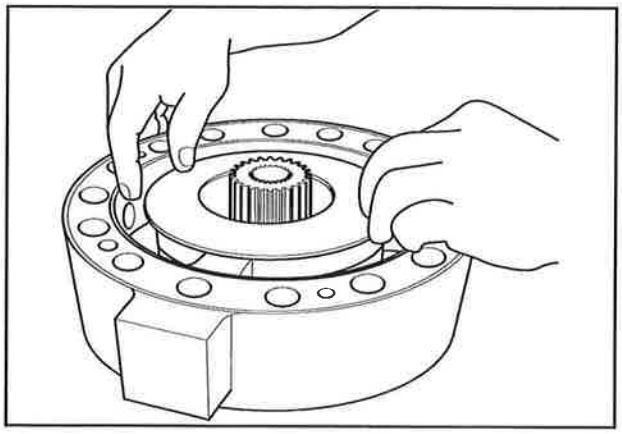

12

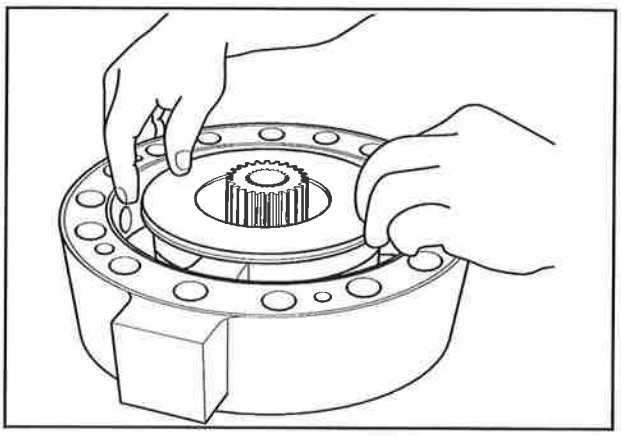

13

1.3. Apply Ultra Black 598 and close the assembly.

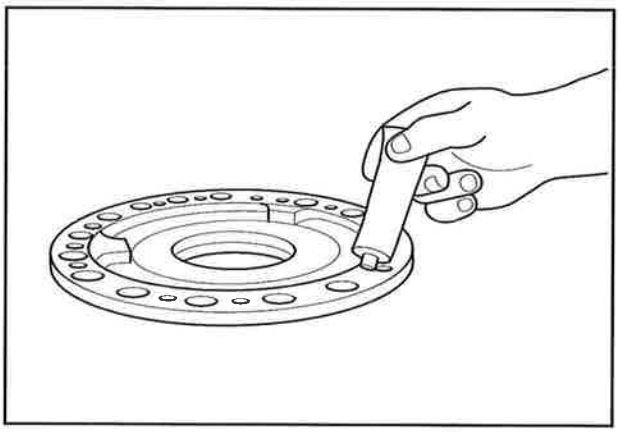

14

REDUCTION HUB MODEL 60 – A8800
(Until chassis A880080)

DESCRIPTION

The unit comprises a hub assembled on the end of the track frame. There is a set of epicycloids dual reduction gears.

The reduction hub is driven by an Eaton hydraulic motor, coupled by a brake disc with multiple springs (safety brake). The reduction hub rate is 39:1.

The planetary assemblies can be disassembled by removing the tracks.

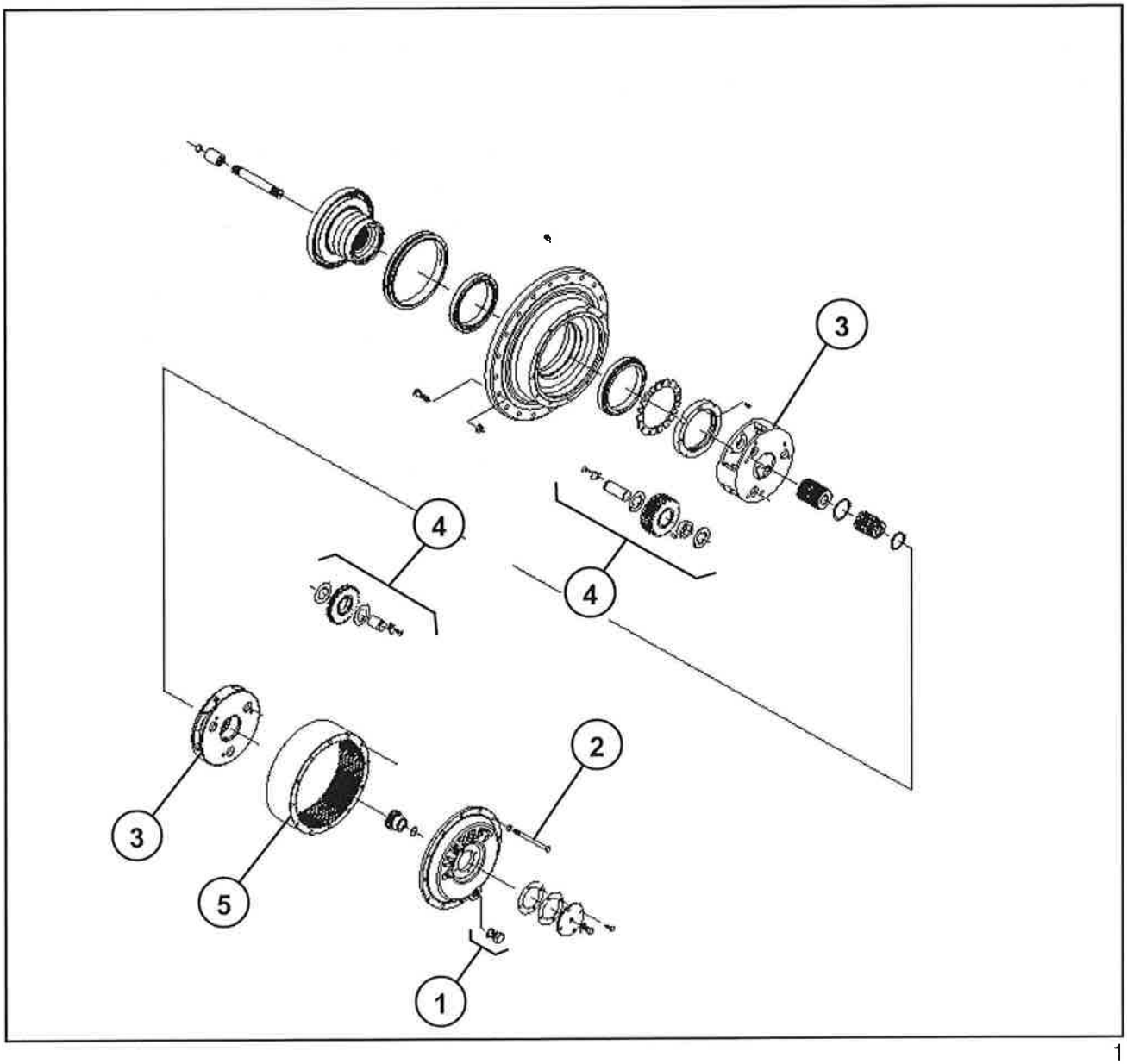

1

1 - Plug
2 - Bolt
3 - Planetary assembly
4 - Gear
5 - Sprocket

DISASSEMBLY

Planetary Reduction Disassembly

1. Drain the oil from the hub and clean it.
2. Unfasten the bolts fastening the planetary cover and remove the cover.
3. Remove the gears from the hub (3).
4. At this point check the bearings for excessive play (wear) on the planetary gears and take note. The locking tabs fastening the planetary pins to the supports must be removed; pull the pins out from the supports. The planetary gears, with the guide washers, the separators and the needle bearings can be removed.
5. Check all components for wear and damages, and replace them as necessary.

Complete Disassembly

1. Drain the oil from the hub and disassemble the planetary as described for B40 hub.
2. Break the chain over the sprocket.
3. Remove the 5/16" x 3/4" bolts from the retaining nut on the hub and remove the nut.
4. Remove the sprocket (5) and the hub assembly, taking care to avoid damages on the dual sealing cone.
5. To remove the hub shaft, first remove the safety brake (refer to the section "Safety Brake"); then, remove the sixteen bolts fastening the shaft to the drive frame to remove it.

CAUTION DURING DISASSEMBLY

- *Check the bearings and the seals' condition and replace them as necessary.*
- *Invert the hub ring gear, transferring it from the left side to the right side and vice-versa.*
- *Check the gears condition and replace them as necessary.*
- *Replace the washers in the satellite box.*
- *Clean the motors and check them for leaks and the shafts and splines condition.*

ASSEMBLY

1. Assembling the bearing on the shaft sleeve

1.1. Apply Loctite 262 on the bearing cup.

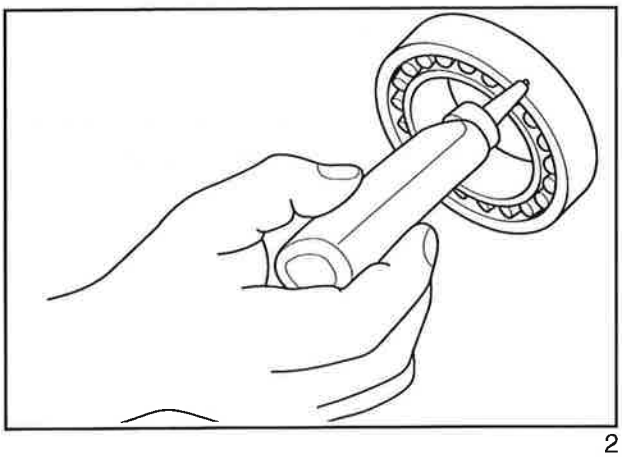

2

1.2. Install the bearing cup onto the housing by tapping it.

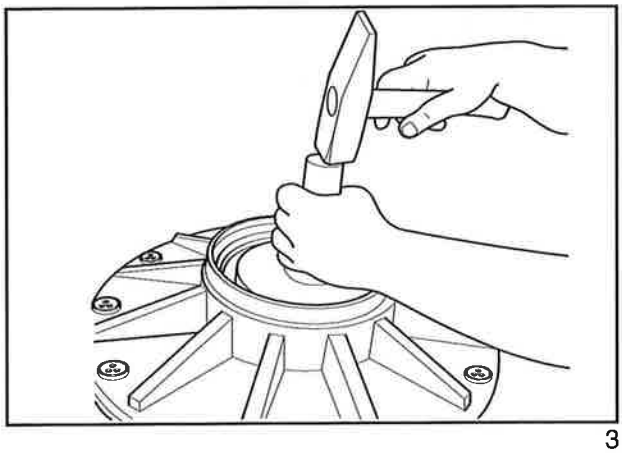

3

1.3. Assemble the shaft on the hub.

1.4. Install the lock plate and the nut.

1.5. Apply a pre-load of 9 kg for new bearings and 7 kg for used bearings.

NOTE: *Use the special tool D0329.*

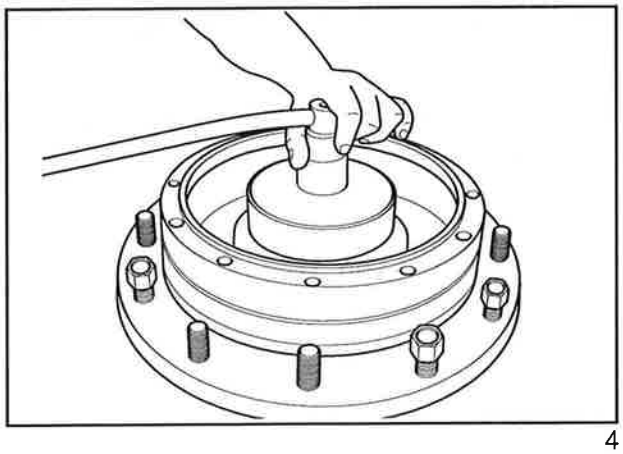

4

1.6. Mark the point related to the pre-load position.

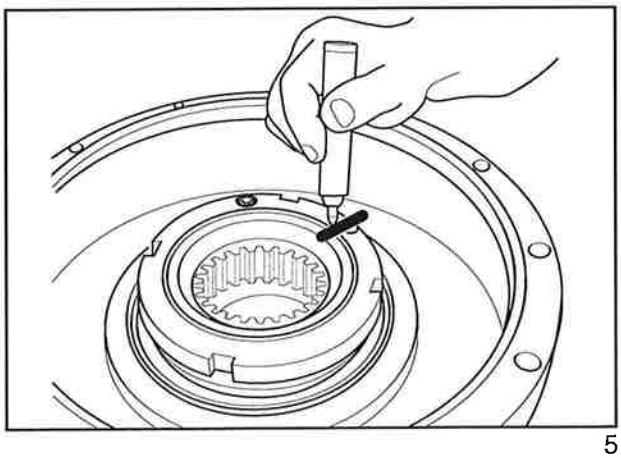

5

1.7. Unfasten the nut.

1.8. Install the seals.

NOTE: *Take care to avoid damages to the o-ring when using tools with sharp tips.*

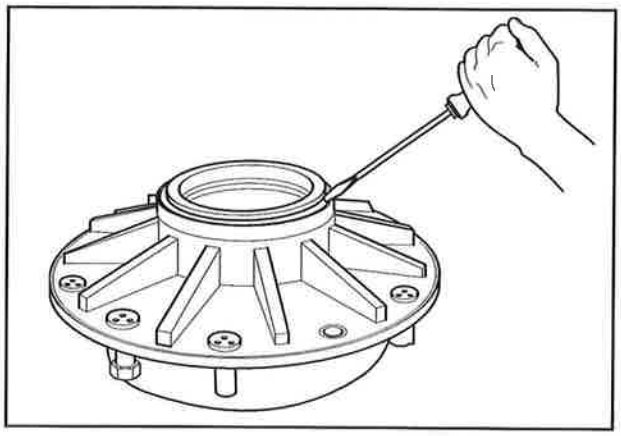

6

1.9. Install the splined ring.

1.10. Apply Araldite on the nut and torque it until the marks match.

1.11. Apply Loctite 271 on the mounting bolts of the lock nut.

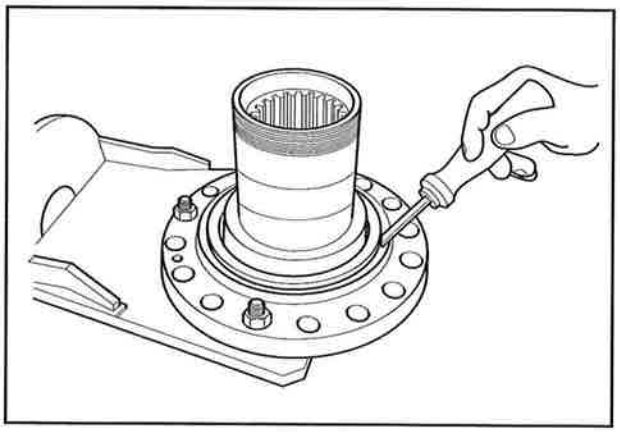

7

2. Assembling the secondary planetary assembly

2.1. Install the coupling.

WARNING: *The slot on the lock ring must be facing the inner side of the hub shaft.*

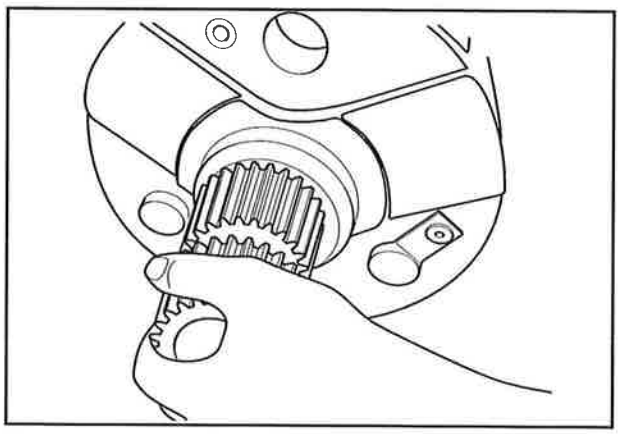

8

2.2. Lock the coupling using a snap ring.

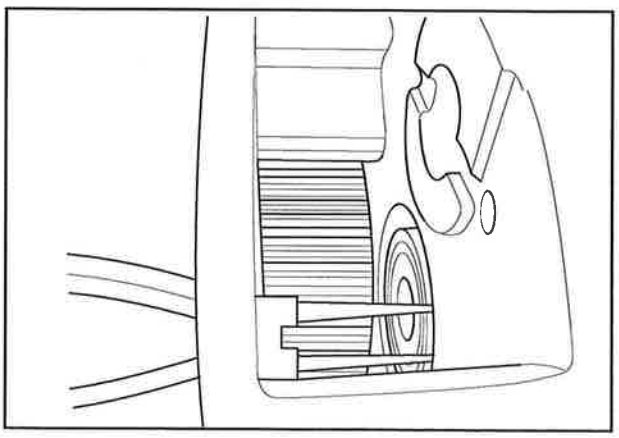

9

2.3. Place the spacer inside the gear.

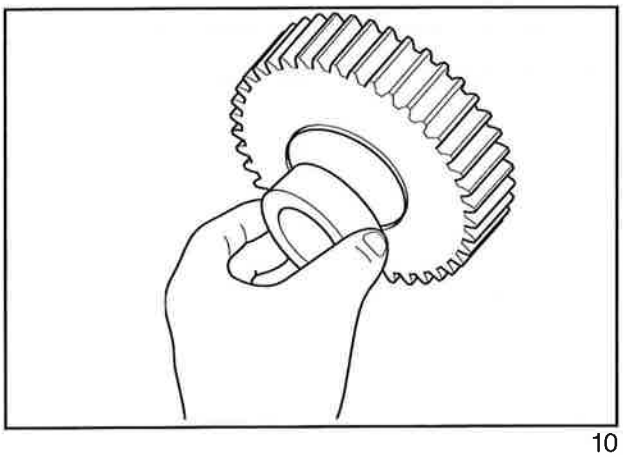

10

2.4. Install the rollers on both sides of the spacer.

2.5. With the help of two pins, position the bearing thrust washers inside the hub shaft.

WARNING: *The thrust washer tabs must be fitted inside the groove on the inner side of the hub shaft.*

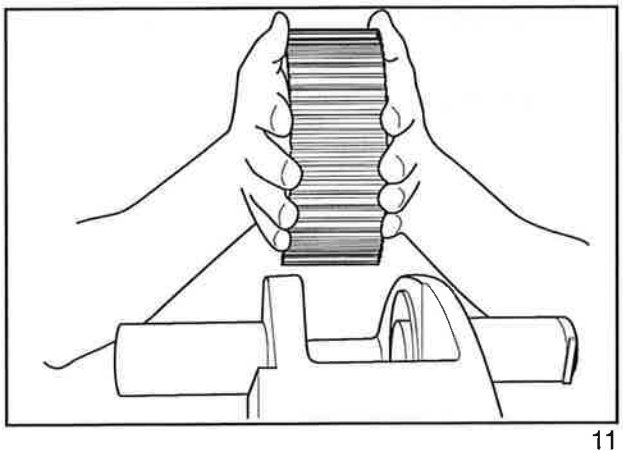

11

2.6. Position the gear very carefully inside the hub shaft and install the pin.

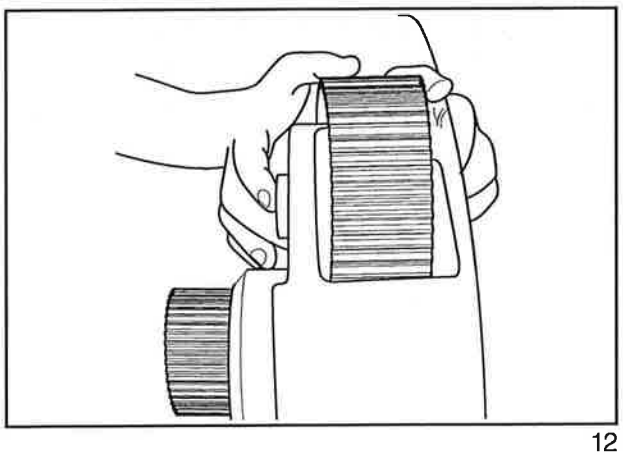

12

2.7. Apply Loctite 262 on the Allen bolt, fit the locking plate and tighten the bolt.

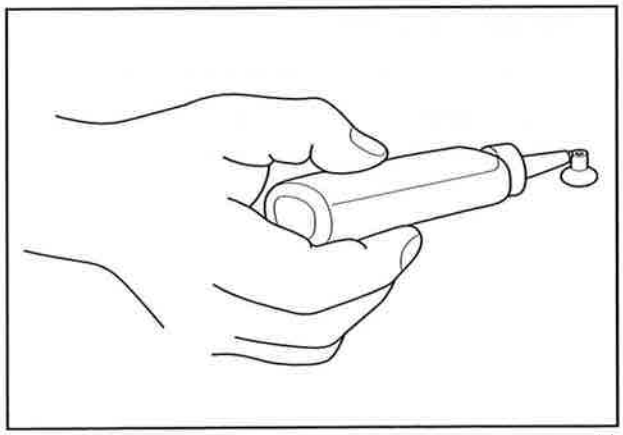

13

3. Primary planetary gears assembly

3.1. Install the rollers in the gear.

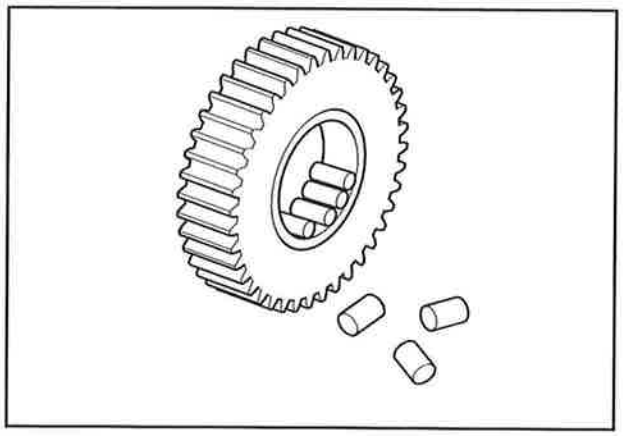

14

3.2. With the help of a pin, position the bearing thrust washers inside the hub shaft.

WARNING: *The thrust tabs must be fitted inside the groove on the inner side of the hub shaft.*

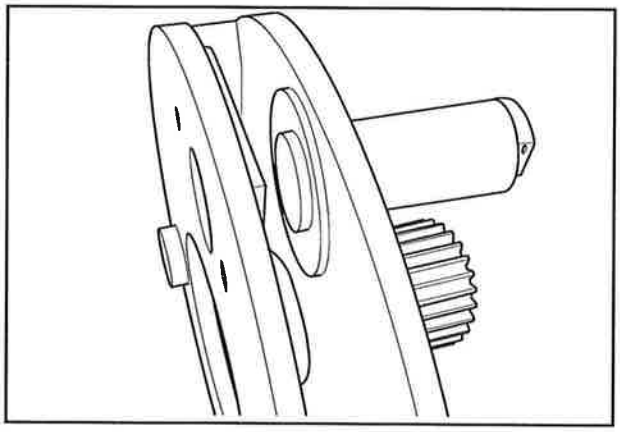

15

3.3. Install the gear and position the pin so that its straight side faces the locking plate side.

3.4. Apply adhesive on the bolt and install the pin locking plate.

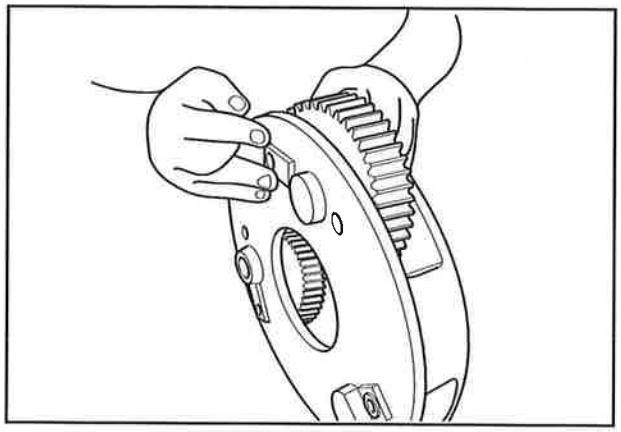

16

4. Reduction assembly

4.1. Install the coupling on the shaft sleeve.

WARNING: *The side with the larger splines must be positioned facing the motor.*

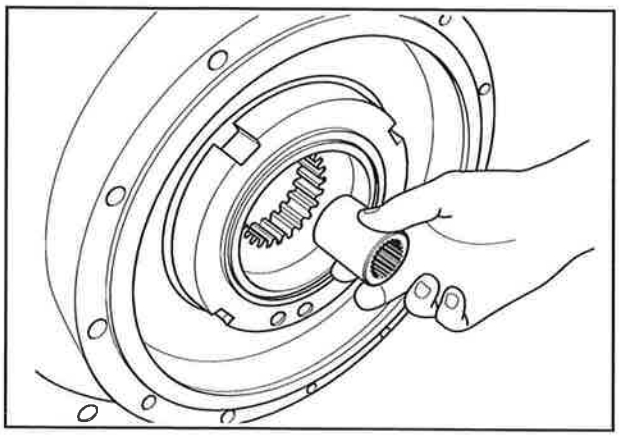

17

4.2. Install the ring gear on the hub. Apply Ultra Black 598.

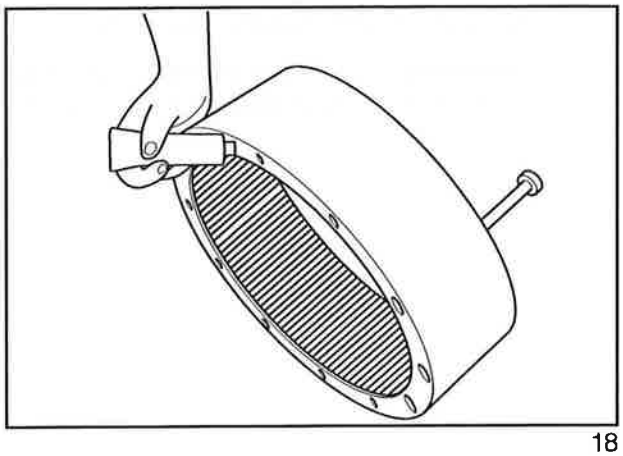

18

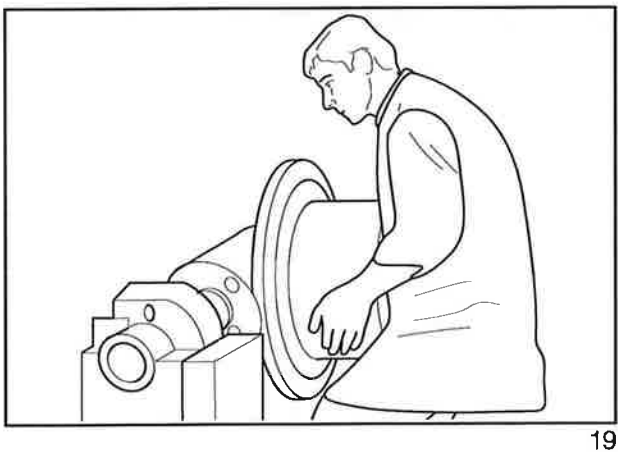

19

4.3. Install the secondary planetary assembly

NOTE: *When assembling the planetaries, make sure that the two planetaries be on the ground direction.*

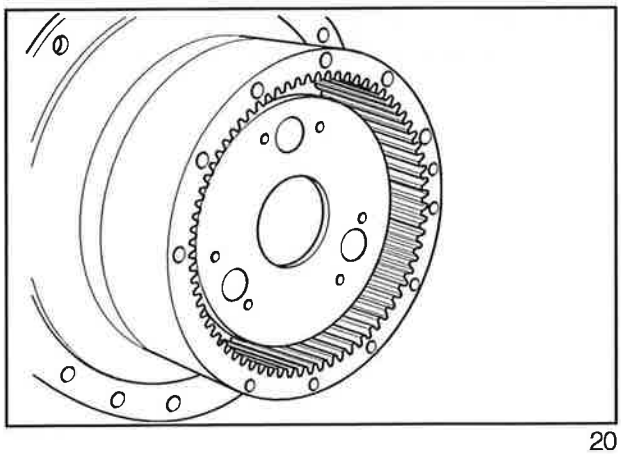

20

4.4. Install the primary planetary assembly

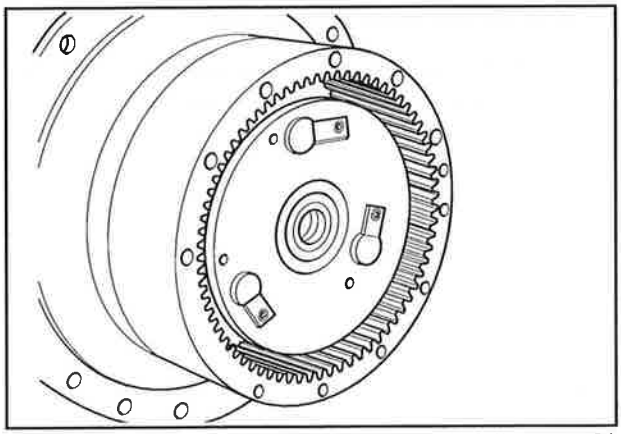

21

4.5. Assemble the shaft on the assembly.

WARNING: *The shaft side with the threaded center hole must be facing to the assembly cover side.*

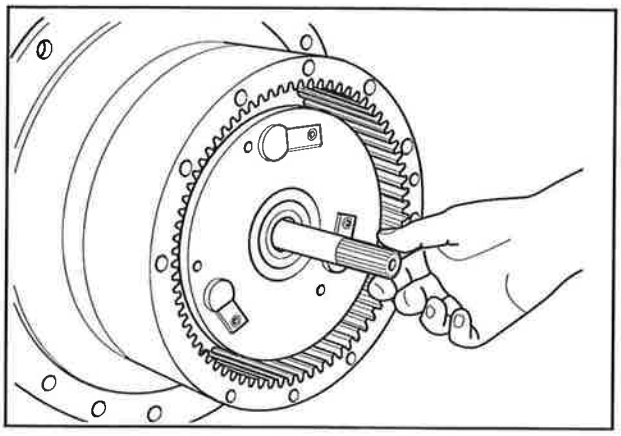

22

4.6. Install the pinion.

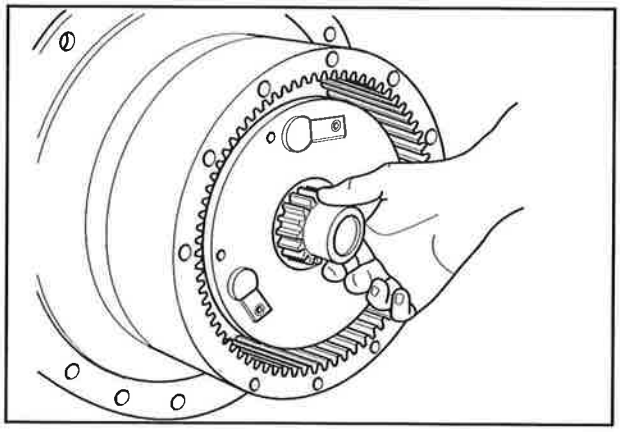

23

4.7. Apply Loctite 262 on the mounting bolts, install the cover and torque the bolts to 110 N.m.

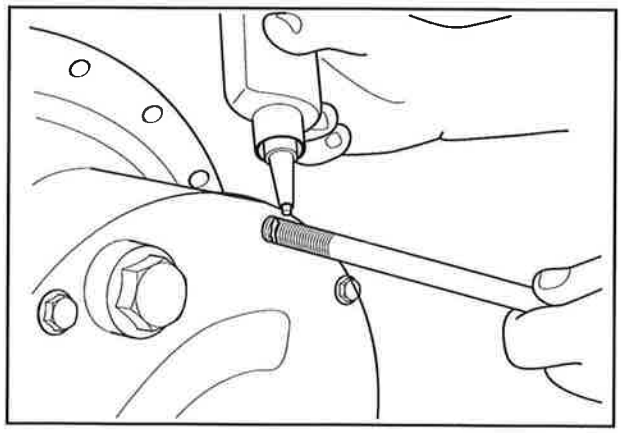

24

5. Pinion clearance adjustment

5.1. With a depth gauge, measure the distance between the thrust face on the pinion and the pinion.

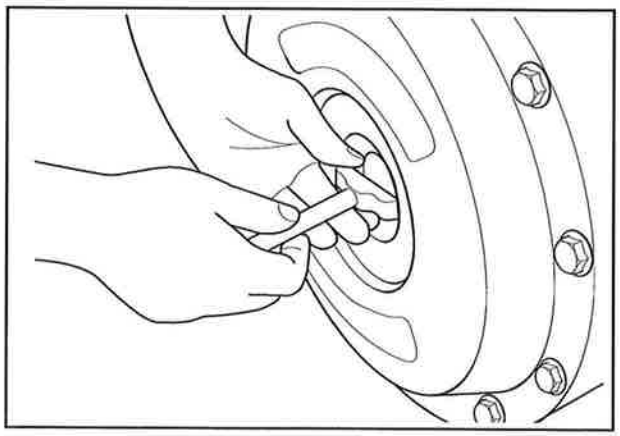

25

5.2. Measure the boss height on the cover.

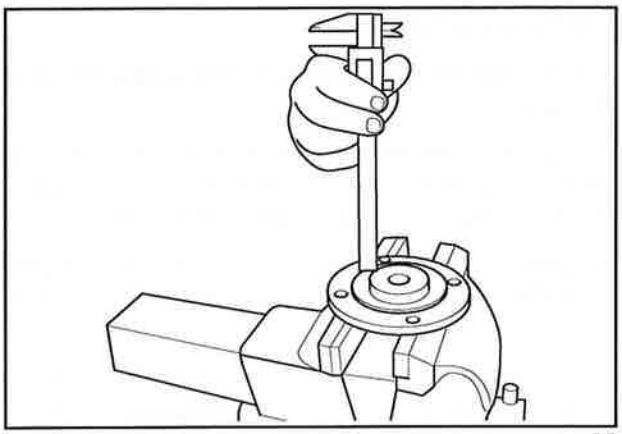

26

5.3. The difference between the readings must be within 1.00 – 2.00 mm; in case of a bigger difference, add shims.

5.4. After completing the adjustment, close the assembly.

NOTE: *Do not use adhesive to close the cover.*

NOTE: *When assembling the planetaries, make sure that the two planetaries be on the ground direction.*

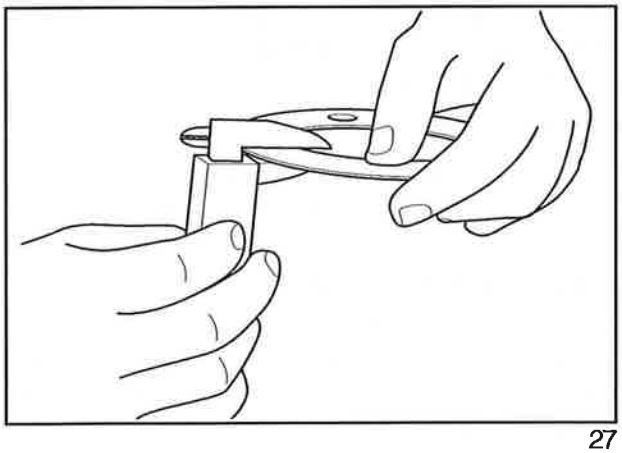

27

Dual Sealing Assembly

How to Obtain the Maximum Durability for your Sealing

The appropriate handling and installing of your sealing are essential for obtaining the maximum durability and positive protection for these precision units.

A special attention is assured during the part manufacturing and delivery in order to assure an absolute cleanness.

To get the maximum performance, the cleanness during the assembly and the oil filling are essential.

Clean all matching surfaces before the assembly.

When installing dual seals, completely wipe off all dirties and corrosion that might be accumulated on surfaces where seals are to be installed.

Avoid careless handling.

Handle all parts with care to avoid damages on critical areas. The seal's sealing face (2) cannotcannot be marked nor scratched.

Remove all protect coat.

Remove all oil and the protect coat from the sealing (2) and the sealing seat (4), using non-flammable cleaning solvents; make sure that all surfaces are completely dried.

Eliminate roughness in the ramp

Check the retaining lip (3) for cuts or marks from tools. Polish any tapping mark and clean it again.

Completely clean the sealing surfaces

Before installing the seal, clean the faces with a lint-free cloth to remove all foreign materials and marks of handling.

Apply some drops of a thin oil on a clean cloth and completely cover the seal's sealing faces; be careful to avoid the oil from contacting the rubber seal ring or its seat.

Cares with the toric ring

Install the rubber seal ring (1) so that it seats evenly on the seal space (2).

Make sure that the seal ring (1) is not twisted and if it seats evenly against the lips to avoid it from falling (2).

Always install a new seal rubber ring on new or used dual sealing. Press in the rubber seal on its seat, and make sure it is evenly set on the hole and then on the ramp lip. The "x" dimension (see the picture bellow) must be uniform throughout the seal circumference.

If a seal driver is not being used, press only the rubber ring with your fingers, installing the ring inside the lip. Do not use a screw driver or any other tipped tool to install the ring.

Always use matching seals.

1. Rubber seal ring
2. Metallic floating seal ring
3. Sealing assembly retaining edge
4. Seal housing

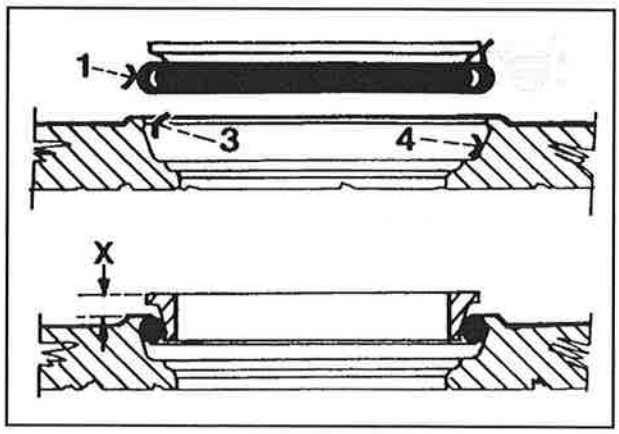

28

BRAKE ASSEMBLY – A8800
(Until chasis A880080)

DESCRIPTION

The A8800 harvester is equipped with safety brakes which may be applied by a switch in the cabin while the engine is operating, or automatically applied when the engine stops. The oil pressure from the Eaton pump keeps the brake opened, reacting against a piston with eight springs.

These springs apply a force on the friction discs; pressing the discs when the oil pressure falls, i.e., when the engine is turned off or when the switch in the cabin is activated, a valve cuts the oil pressure.

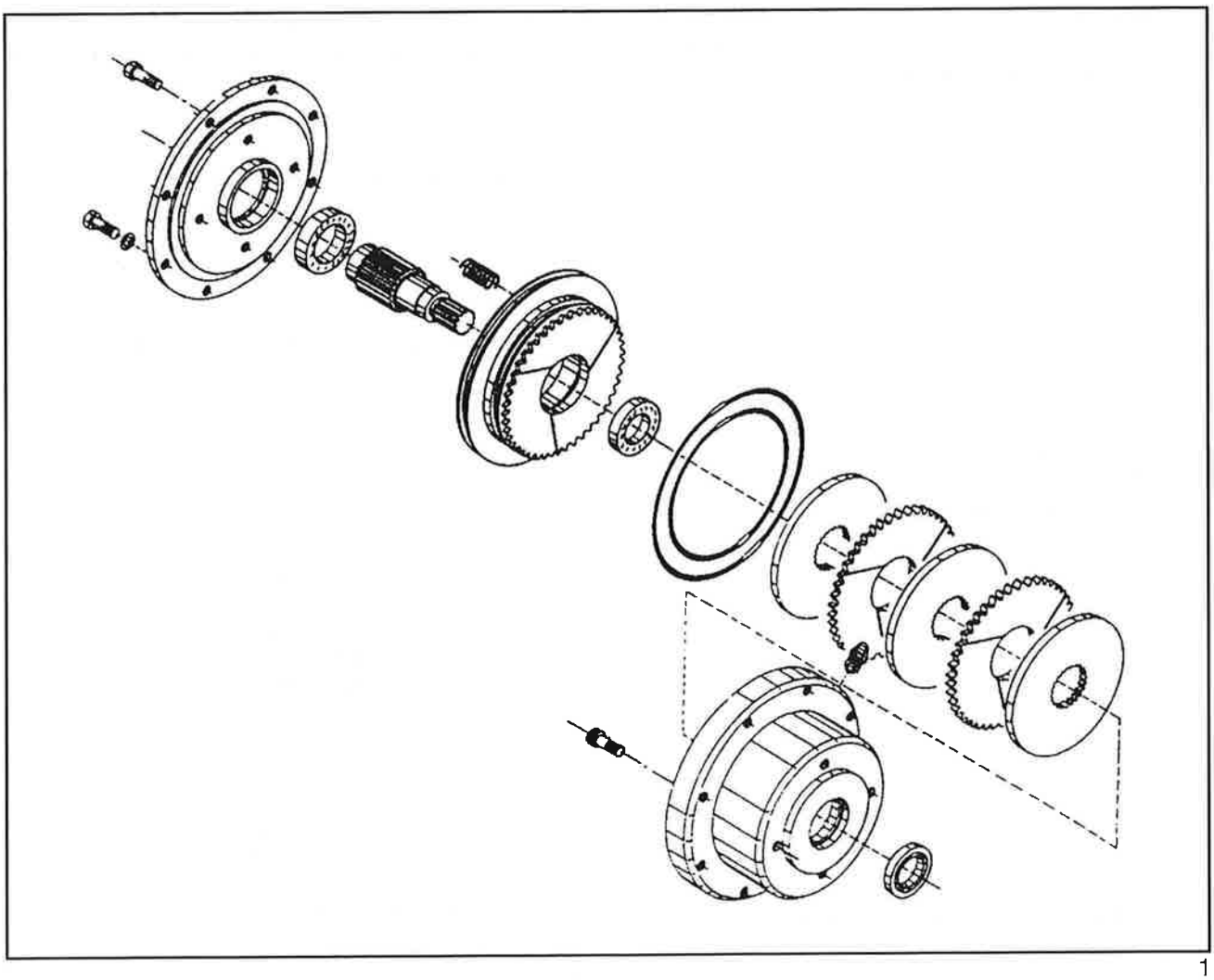

1

DISASSEMBLY

Safety Brake Disassembly

1. Remove the four bolts fastening the Eaton motor, remove the motor and support it on a block.

   NOTE: *It is not necessary to remove the hoses from the motor.*

2. Remove the eight bolts from the cover and remove the cover. Remove the springs on the piston outer side.
3. With a straight bar and UNC 3/8" bolts, use the extraction holes on the brake piston and remove the piston from the brake box.

   NOTE: *If there is not an extractor available, the piston can be removed from the brake using a pressure load from the transmission pump.*

The procedure is as described bellow:

a. Place a tray or an appropriate container under the brake assembly to collect the hydraulic fluid drained.

b. Confirm if the parking brake switch in the cabin is released. Start the engine and turn it off immediately.

4. Remove the plates installed on the brake and take note of their installation order. Disconnect the brake pressure hoses and plug their ends.
5. Using a 3/8" Allen driver, remove the four bolts fastening the brake to the shaft and remove the brake assembly from its fitting place.

CAUTION DURING DISASSEMBLY

- *Check the assembly for leaks.*
- *Check the bearings for wear and replace them as necessary.*
- *Check the piston repairing and replace them as necessary.*

ASSEMBLY

1. Apply Loctite 262 on the bearing outer side.

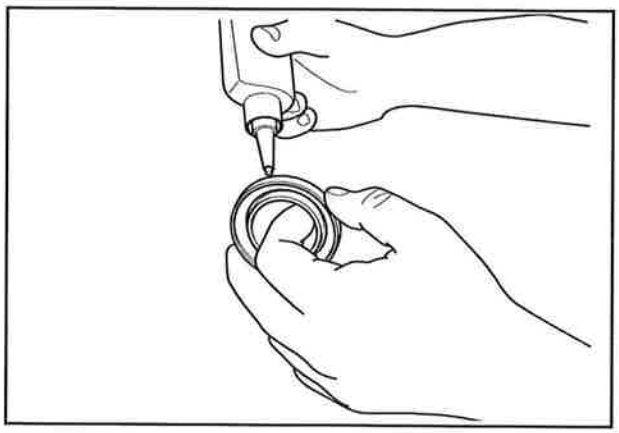

2

2. Install a bearing on the body housing.

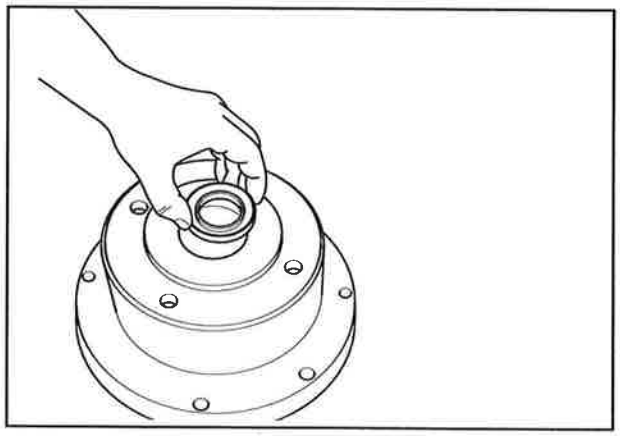

3

3. Fasten the brake housing to the reduction with Allen bolts; apply Loctite 262.

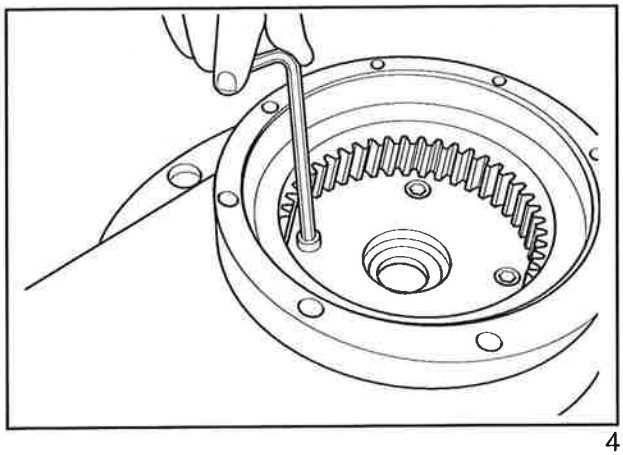

4

4. Install the bearing on the shaft and apply Loctite 262 on the bearing.

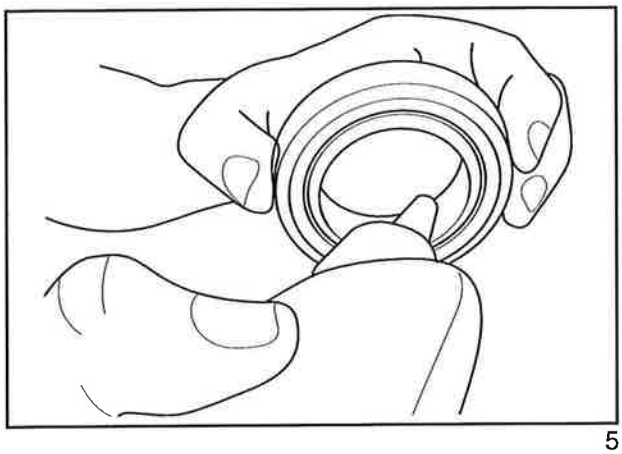

5

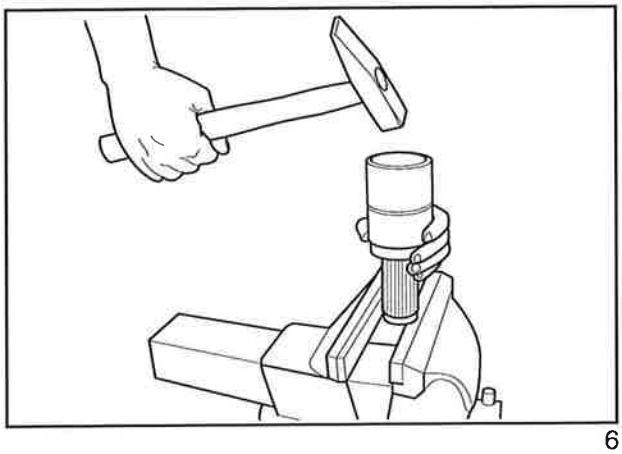

6

5. Mark the piston position.

   WARNING: *Pay attention to the correct teeth meshing.*

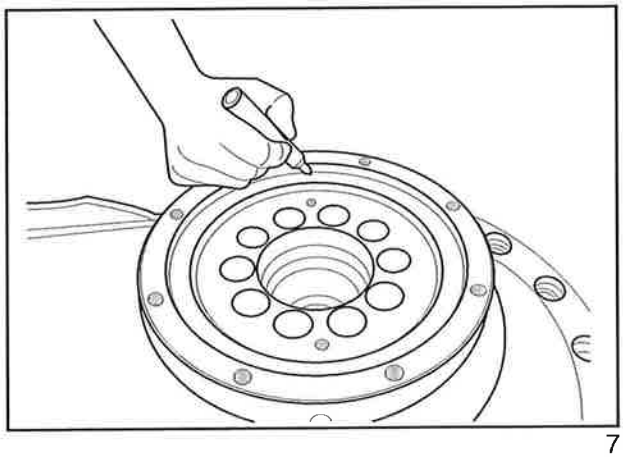

7

6. Install the o-rings on the piston; to make this procedure easier, it is recommended the use of Vaseline.

   NOTE: *Be careful when using sharpened tip tools, as they may cause damages to the ring.*

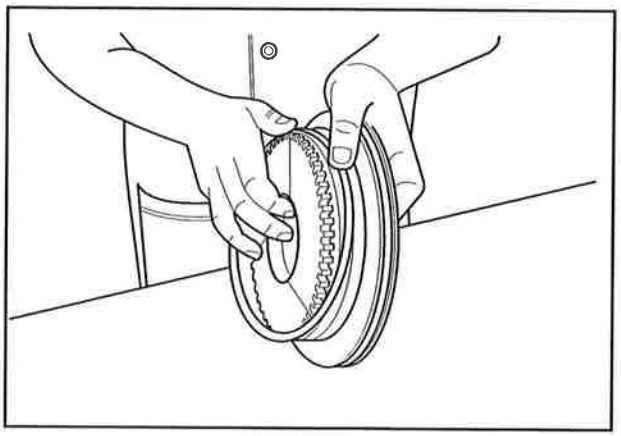

8

7. Install the shaft in the housing.

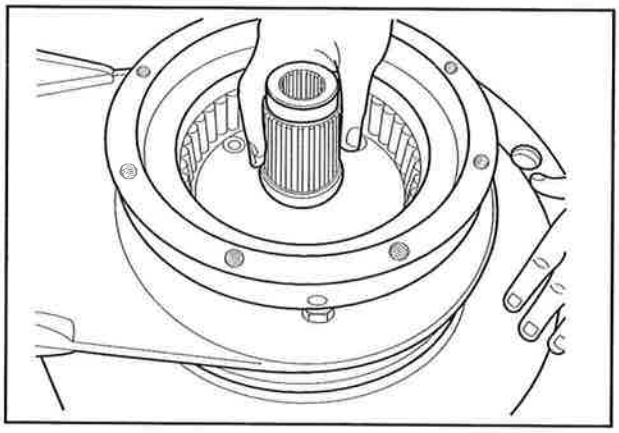

9

8. Install the discs; start with the splined discs on the inner side and then install the splined discs on the outer side.

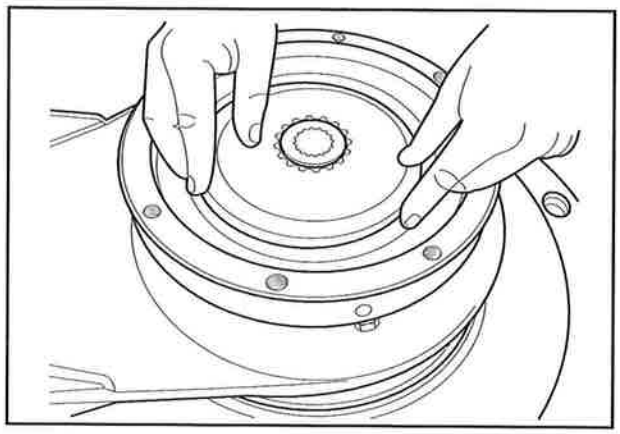

10

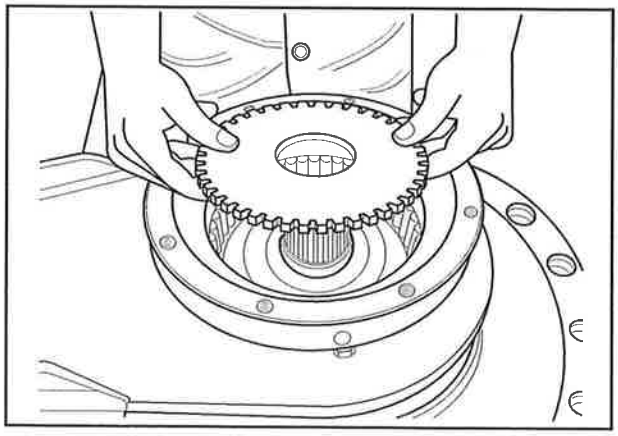

11

9. Assemble the piston in the housing, noting the mark from the previous procedure.

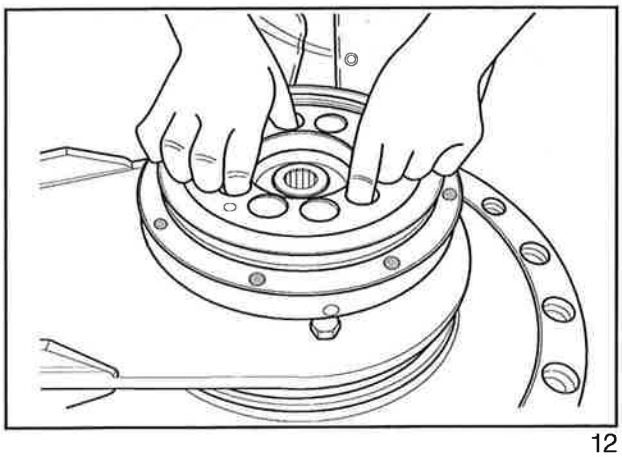

12

10. To make the piston seating easier, use the cover turned upside down.

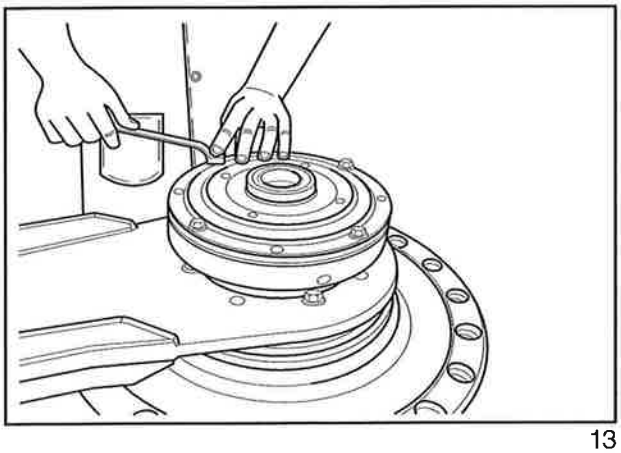

13

11. Place the springs in the piston.

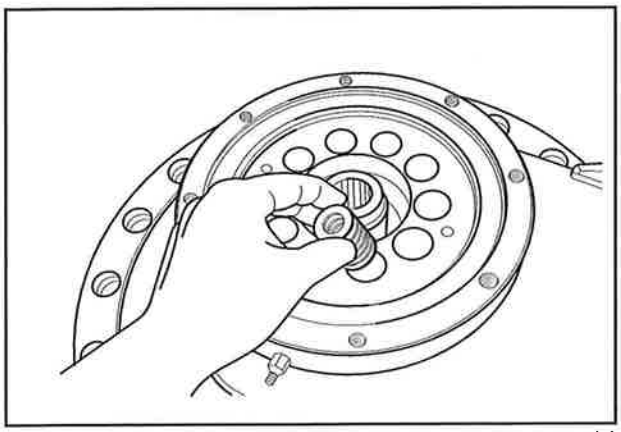

14

12. Assemble the bearing on the cover, using Loctite 262 on the bearing outer side.

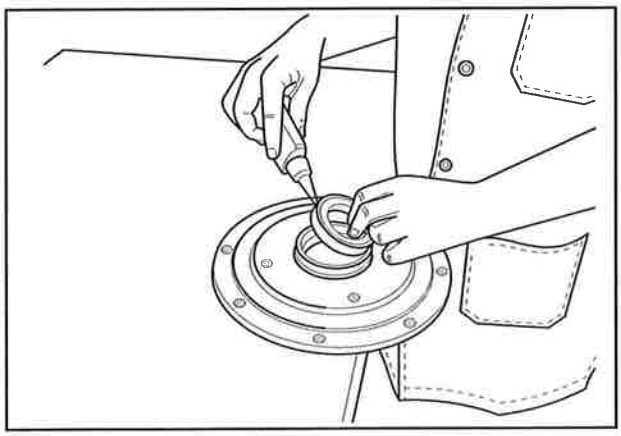

15

13. Install the cover without applying adhesive. Use Loctite 262 on the bolts.

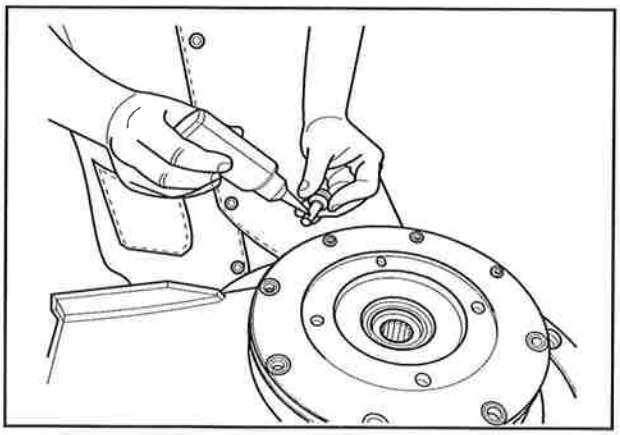

16

REDUCTION HUB - A8800
(From chassis A880081)

General information

The supplied information must be carefully read and put into practice.

The pictures and drawings are supplied with an educational intent in order to described, in a detailed fashion, the reducer maintenance operations.

Some differences between the images of this manual and that encountered on the actual reducer may occur. However, these differences are not relevant for the main maintenance parameters or functions.

Product Identification

The identification data of each unit are described on plates on the reducer.

NOTE: *When general information regarding the product, replacement parts or technical assistance is necessary, always have at hand the data stamped on the identification plate.*

he identification plate must not be removed nor destroyed during the entire useful life of the product. The image below shows the location of the identification plate data:

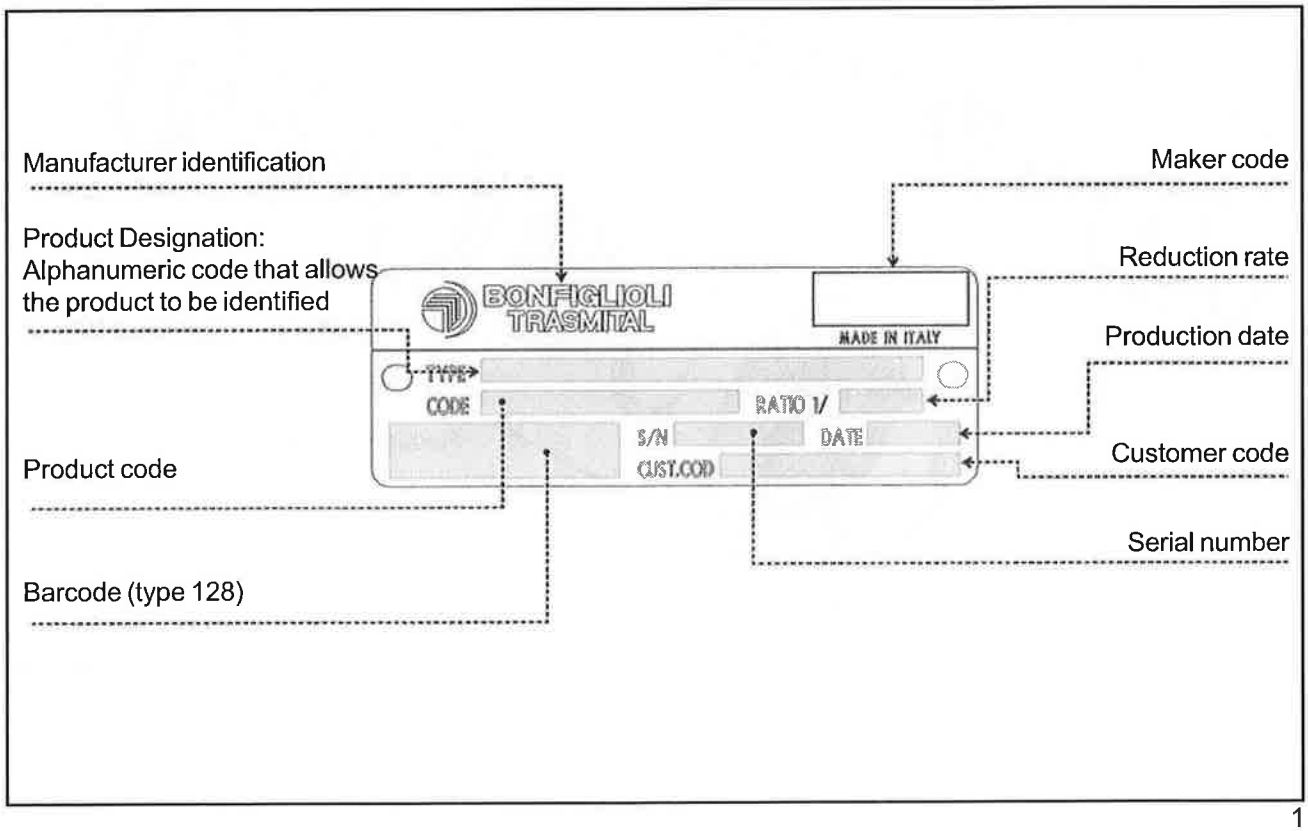

1

TECHNICAL INFORMATION

Product Description

The reducer of the series described in this manual was developed and built to work with the reducer motor assembly.

The unit contain a planetary gearbox with 2 reduction stages.

An important recommendation is to "perfectly" design the hydraulic system.

The illustrations below show the parts and main functions of the reducer.

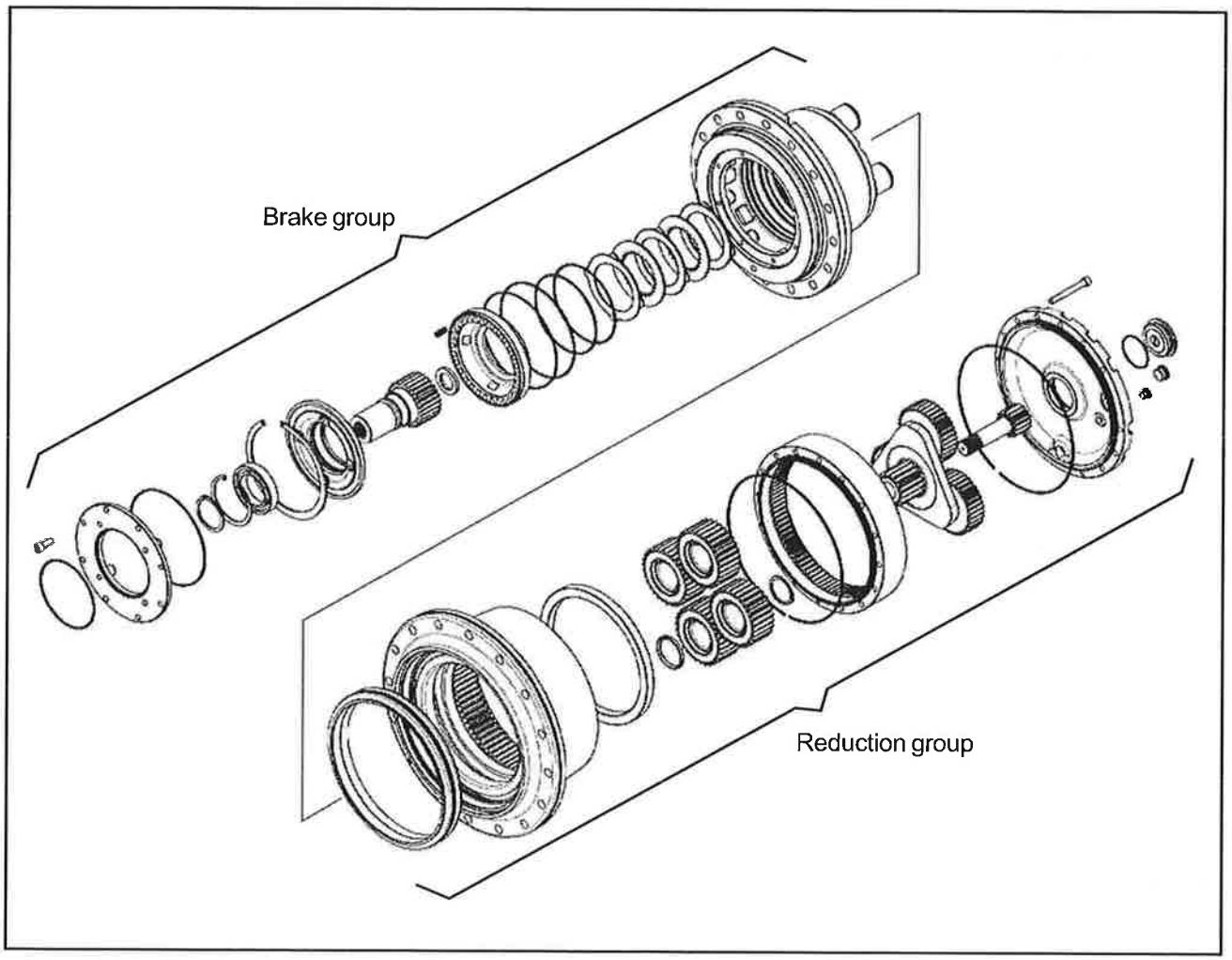

2

Positioning of the oil plugs in the reducer

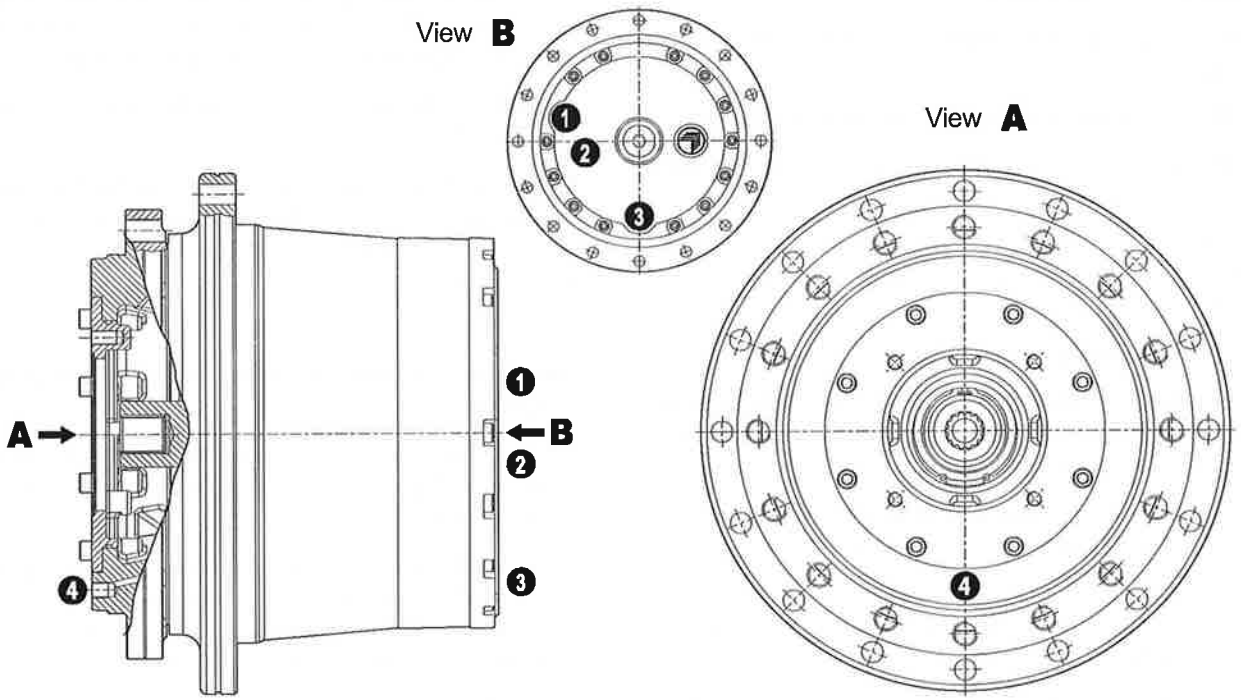

3

1 - M22x1,5 (Filling plug)

2 - M14x1,5 (Oil level check plug)

3 - M22x1,5 (Oil drainage plug)

4 - G1/4" (Brake control)

INSTALLATION INFORMATION

Installation Procedure

Prior to starting the installation, follow the instructions below:

1. Remove the packaging that protects the product
2. Prepare the parts for coupling by using the installation guide.

The Installation procedure is described below. In the following topics, the procedures to be followed are in greater detail.

- Hydraulic motor installation
- Installation of the reducer motor assembly in the machine (topic "Installation of the reducer motor assembly in the machine")
- Fixation of the drive wheel in the reducer motor (topic "Fixation of the drive wheel in the reducer motor assembly")
- Brake connection (topic "Connecting the reducer to the brake")
- Oil filling and level necessary for the reducer (topic "Oil supply")

Installation of the hydraulic motor

The assembly areas and hydraulic motor insertion location must be clean and without impurities.

NOTE: *Prior to assembling the hydraulic motor, check with a graduated depth ruler the correct assembly of the unit, by checking the axial distance as shown in the diagram below:*

1. *Adjust the o-ring (36) in the hydraulic motor housing and assemble it on the reducer, being careful not to damage the previously installed o-ring.*
2. *Tighten the two screws (A), with a specific torque of 215 Nm.*

NOTE: *Only when it is necessary to install the tubes, remove the protection lids of the connections. These lids prevent the entrance of foreign materials in the hydraulic motor.*

Installation of the reducer motor assembly on the machine

1. Take the reducer motor assembly to the assembly area and apply the movement methods informed in previous topics.
2. Clean the coupling surface, remove all oil or paint and adjust the reducer motor assembly on the chassis / machine structure (For correct installation, see the assembly drawing).
3. Fix the reducer motor assembly onto the chassis/ machine structure using 18 M16 screws (A) class 8.8, with a specific torque of 215 Nm.

Fixation of the drive wheel onto the reducer motor assembly

1. Clean the coupling surface from any oil or paint and assemble the wheel onto the reducer motor assembly
2. Fix the wheel onto the reducer motor assembly using 10 M22x1,5 stud bolts and tighten the M22x1,5 nuts by applying a specific torque of 600-650 Nm. (By applying lube oil onto the stud bolt thread).

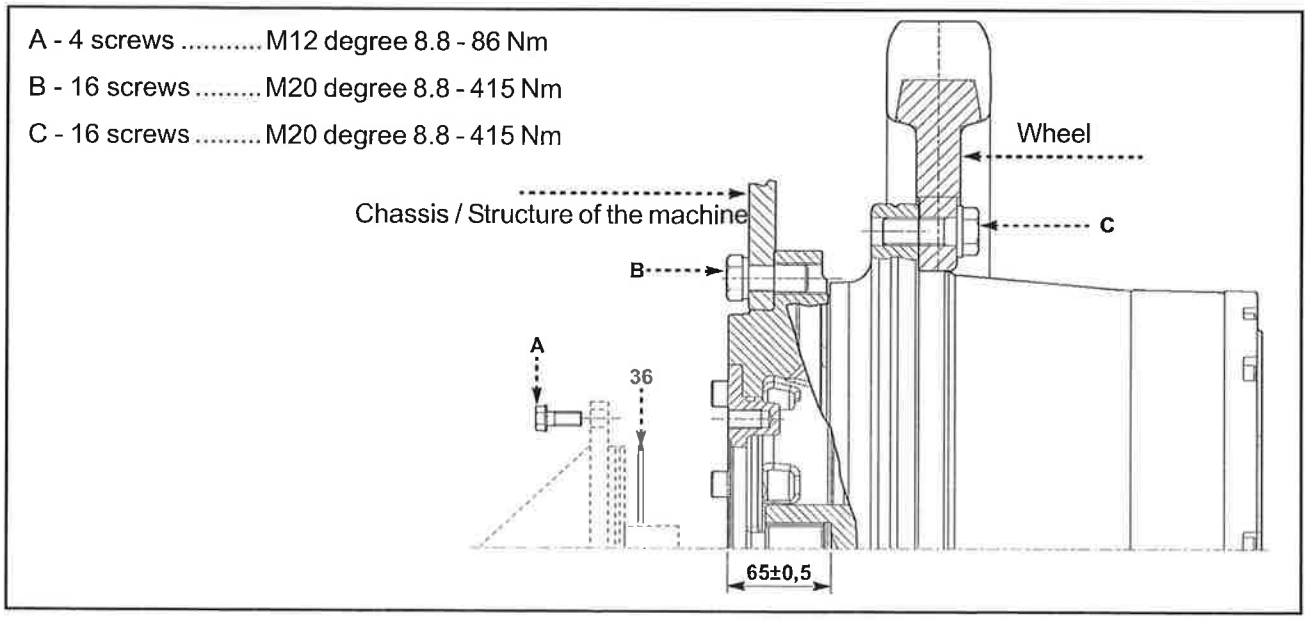

Connecting the reducer to the brake

The reducer is assembled with a multi-disc negative safety brake with hydraulic control (parking brake).

For information regarding the characteristics of this brake, check the installation drawing.

Brake technical data

Brake opening pressure (bar) 13

Maximum working pressure (bar)..... 50

Brake torque (N.m) ..... 655 +/- 10%

1. Connect the brake control tube in the housing (4).

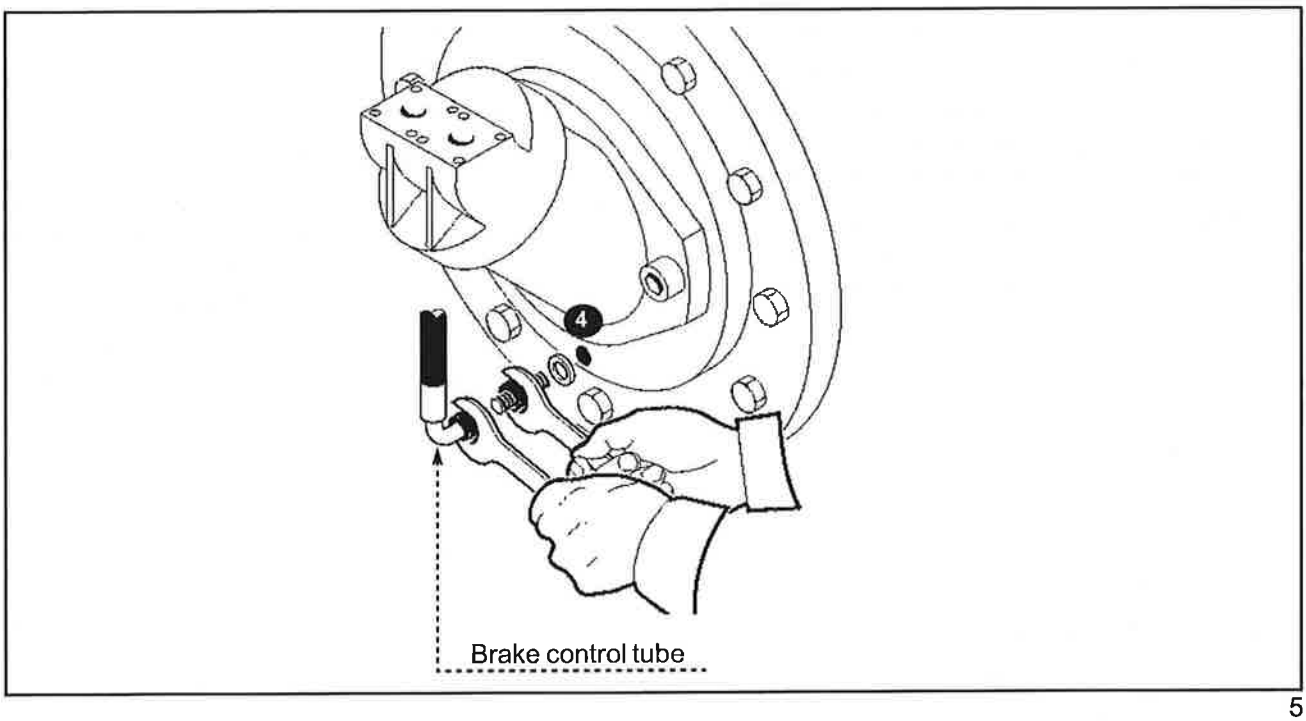

5

Starting reducer operation

Firstly, it is recommendable to take the following precautions:

1. Check if the reducer motor assembly is correctly lubricated
2. Eliminate the eventual presence of air in the hydraulic circuit and add oil to the tank if necessary.

   NOTE: *The presence of air in the hydraulic circuit can be observed by the formation of foam in the hydraulic tank and by jerks and excessive noise in the motor and valves during operation.*
3. Start operating the reducer motor assembly at a low speed and gradually increase, by verifying if it is working correctly, without any noise or vibration.

   NOTE: *Do not reach maximum pressure, except if the entire hydraulic system has been filtered in order to eliminate eventual impurities that may be present.*

During operation, follow the steps listed below:

4. Check the correct rotation and direction.
5. Check of the operation is without excessive noise and/or vibration.
6. Check to make sure the lube oil temperature does not exceed 85-90 °C.

After finishing the first operation of the reducer motor assembly, follow the steps below:

7. Check for any leaks. In case of any, fix them.
8. Check the lube oil level.
9. In case any air is present in the circuit, during the first operation, the action of opening the brake may be delayed. It is advisable that this be repeated, by opening and closing the parking brake until it stabilizes.
10. Check for any other problem in the general operation.

Uncoupling the reducer

The reducer is supplied with a mechanical uncoupling device, to allow that the machine be towed in case the engine is not working.

NOTE: *The maximum displacement rotation with the reducer uncoupled is 90 rpm for a maximum time of 1 hour.*

⚠ WARNING ⚠

When using the reducer uncoupling option, this must be done with the reducer stopped and on level ground.

Reducer uncoupling

1. Release the uncoupling plug on the assembly lid using a proper wrench.

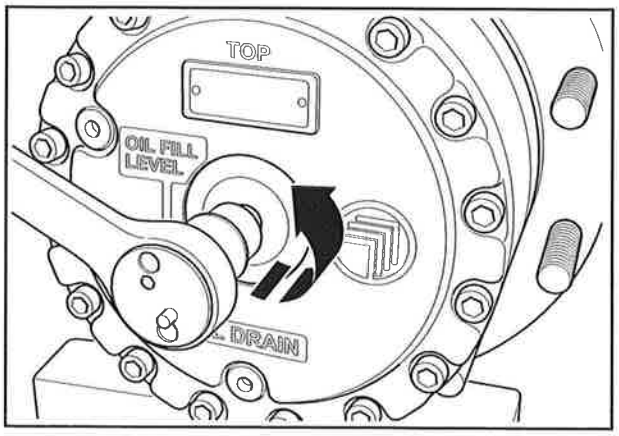

2. Remove the uncoupling plug of the assembly lid.

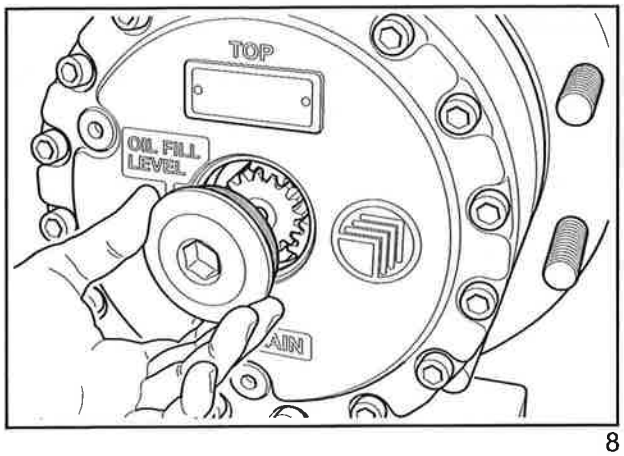

8

3. Place the M6x50 screw, degree 8.8, in the orifice present on the coupling shaft and remove the coupling shaft from the reducer.

   NOTE: *If necessary, complete with lube oil.*

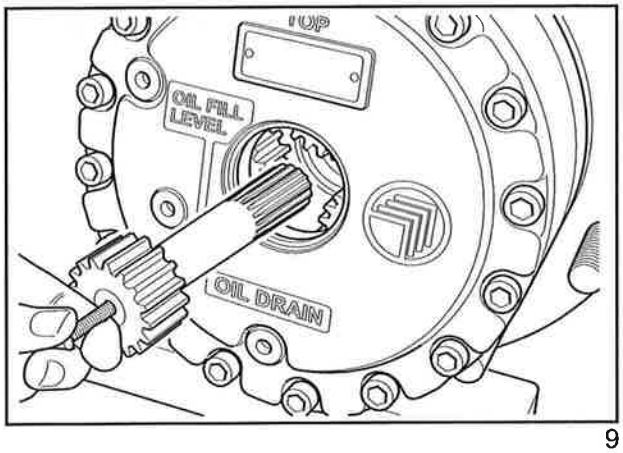

9

4. Assemble the uncoupling plug of the assembly lid.

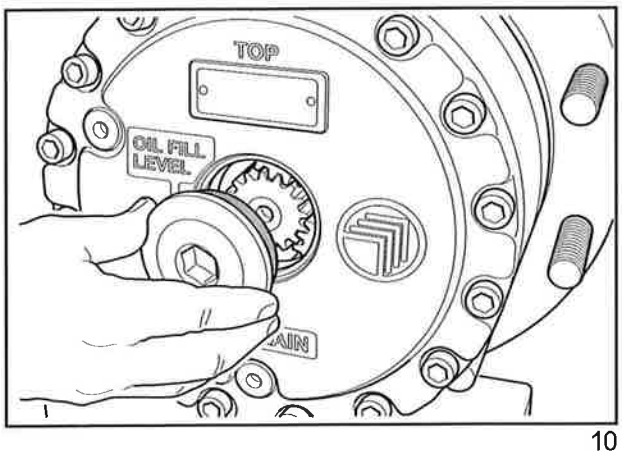

10

5. Tighten the coupling plug on the assembly lid with the proper wrench and with a specific torque of 90 +/- 10 Nm.

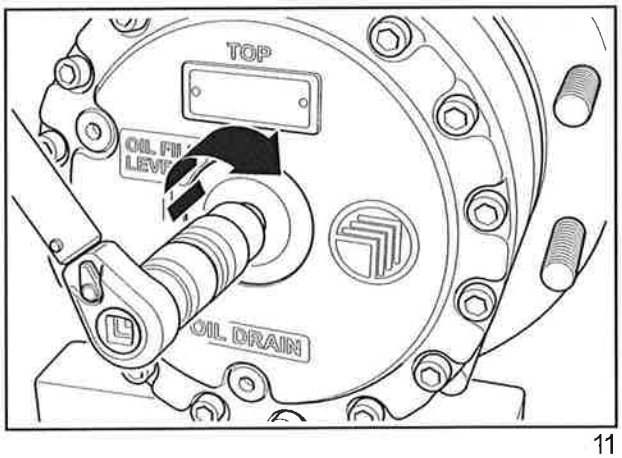

11

Reducer coupling

1. Release the uncoupling plug on the assembly lid using a proper wrench.

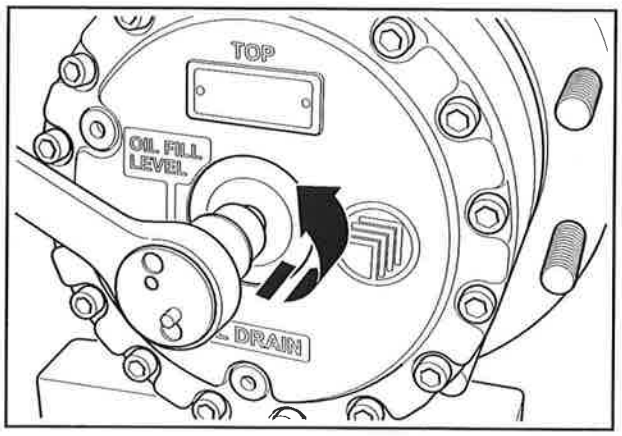

12

2. Remove the uncoupling plug of the assembly lid.

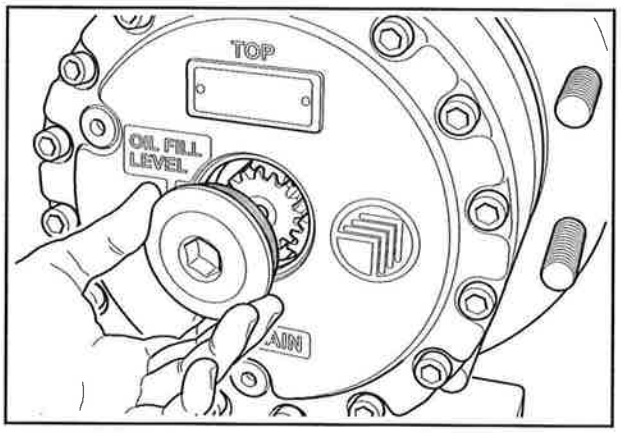

13

3. Assemble the coupling shaft on the reducer.

   NOTE: *If necessary, complete with lube oil.*

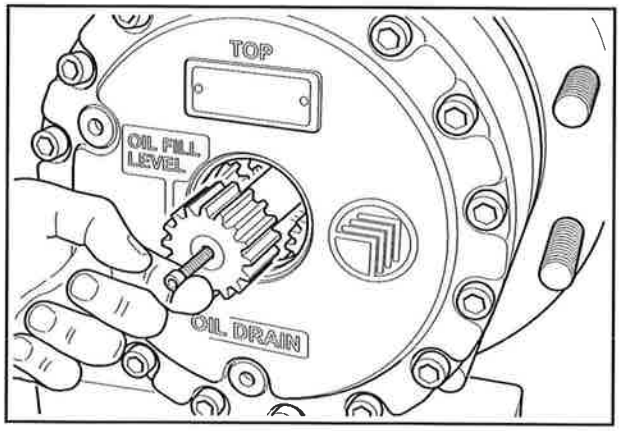

14

4. Assemble the uncoupling plug of the assembly lid.

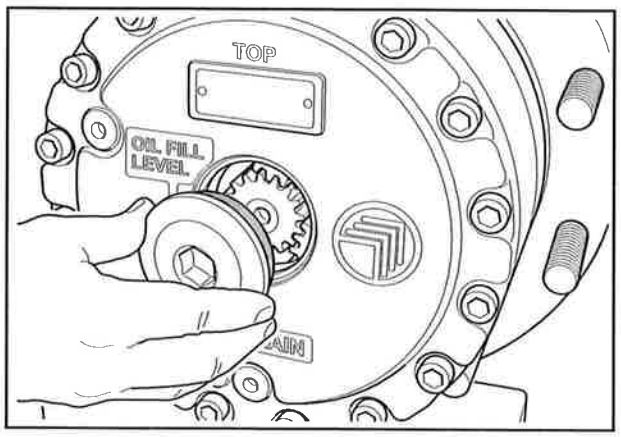

15

5. Tighten the coupling plug on the assembly lid with the proper wrench and with a specific torque of 90 +/- 10 Nm.

Operation:

a) Reducer coupled

In this situation, the movement is transmitted to the reducer by means of the hydraulic motor.

b) Reducer uncoupled

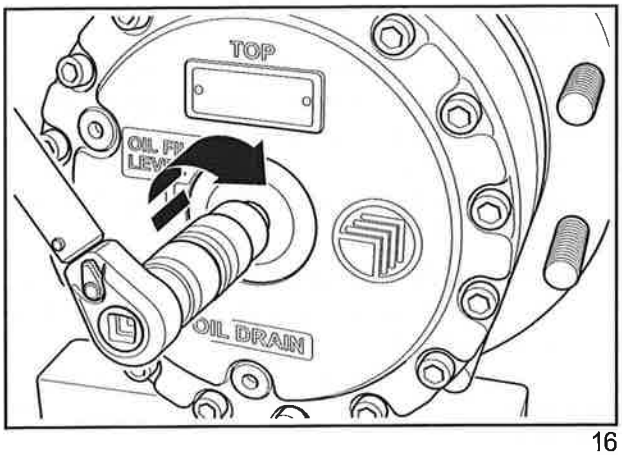

16

⚠ CAUTION ⚠

Under this condition, the hydraulic motor and brake are disconnected from the reducer: The wheel is free.

Disassembly

In the case that it was necessary to undergo a (partial or total) revision, it will be necessary to dismount the gearmotor from the machine. As this is known as an out of the ordinary maintenance procedure, it is important that only personnel with specific skills and experience undertake it.

It is also important that this procedure is undertaken in a workshop that is adequately tooled. As well as normal workshop tools it will be necessary to use special tools that can be made (see special tools attachment) or may be requested from the manufacturer.

On the following pages are all the assembly and disassembly procedures of the reducer motor assembly. It is important to exactly follow these steps as described in this manual.

Execute the operations when necessary by taking all the necessary safety measures, as, for example:

1. Protect all the hydraulic connections of the reducer motor assembly system to prevent foreign objects from entering the hydraulic circuit.
2. Be careful not to damage the coupling surfaces
3. Make the necessary movements so as to not place the health of people involved at risk and also to not damage the reducer motor assembly
4. Use a work area that is in accordance with the work safety conditions.

NOTE: *Below are all the steps to be followed during the operations. The numbers in parentheses in the text correspond to the references in the exploded view of the assembly.*

Exploded view of the reducer motor assembly

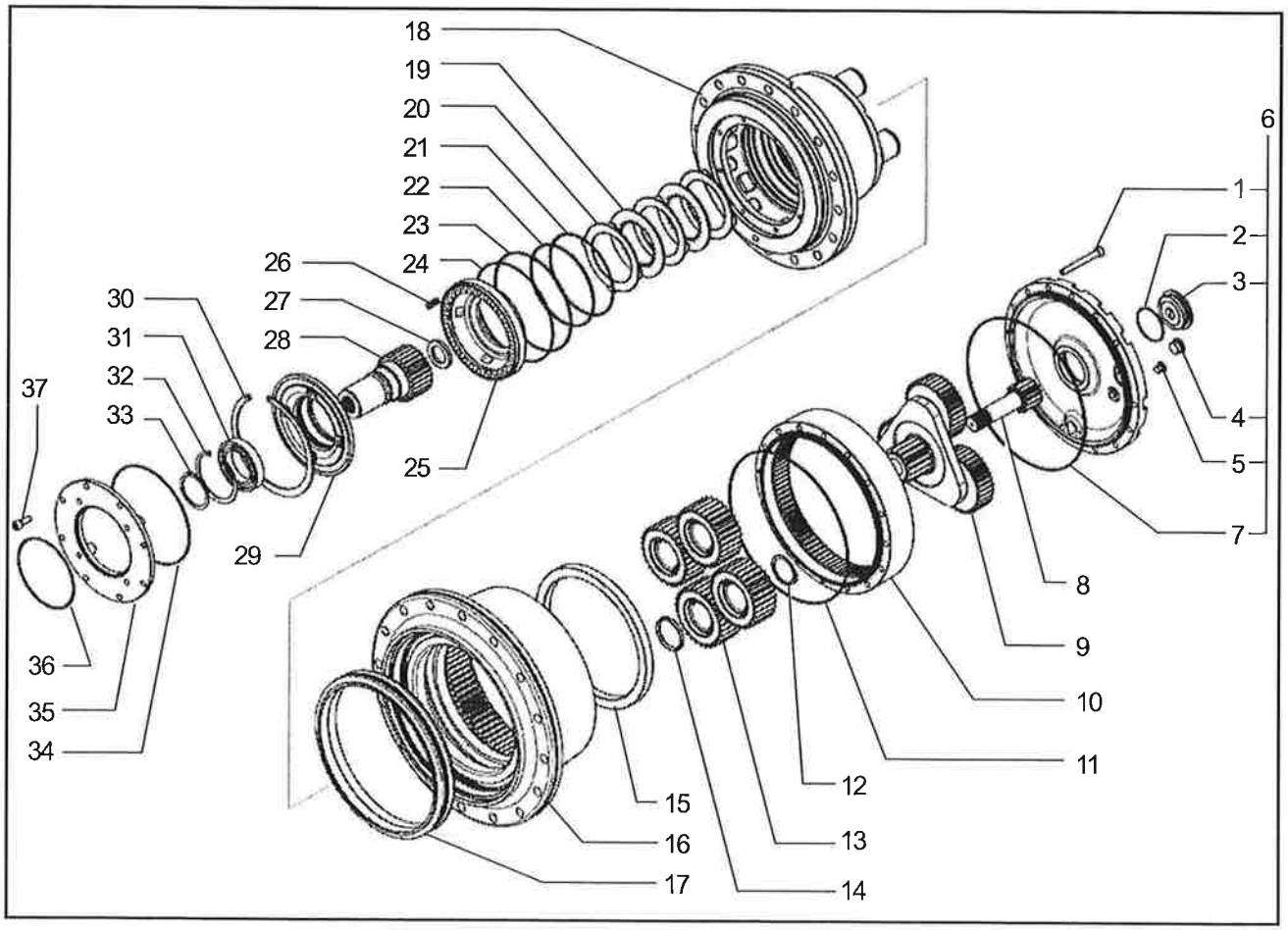

17

Reducer disassembly

The initial inspection of the gears can be done without disassembling the reducer motor assembly of the machine.

NOTE: *Some components are large and heavy. Pay attention during the handling.*

Before track drive disassembling, make sure that the oil is discharged.

Unscrew the nos. 4 screws M12, grade 8.8, and remove the hydraulic motor and its O-ring seal (36).

1. Unscrew the screws M10X85 (37), grade 8.8, from the motor adaptor flange (35).

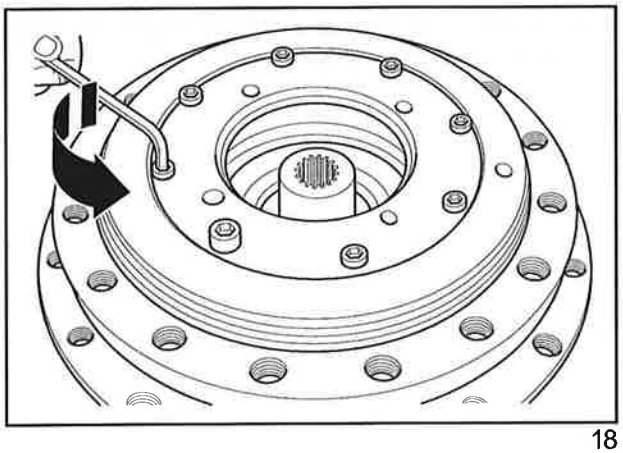

18

2. Remove the motor adaptor flange (35).

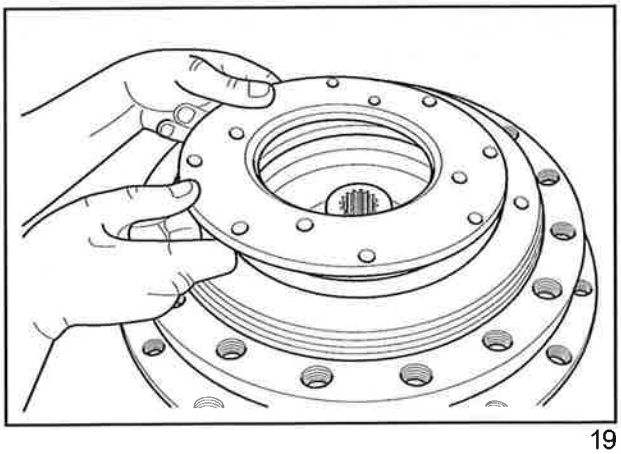

19

3. Remove the O-ring seal (34) from its seat in the motor adaptor flange (35).

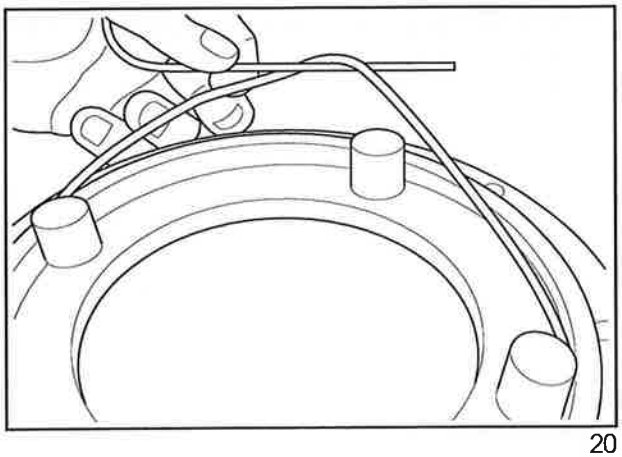

20

4. Install the tool on the flanged hub (18) and turn the screw until it contrasts the force of the spring (26). By using pliers remove the circlip (30) from its seat in the flanged hub (18) and take away the tool.

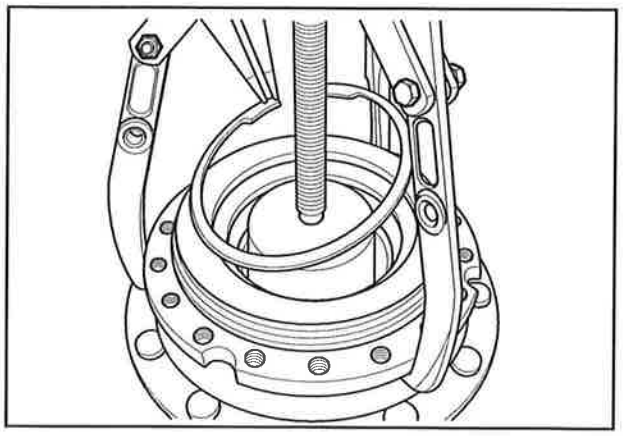

21

5. Remove, at the same time, the spring retainer disc (29) and the brake shaft (28).

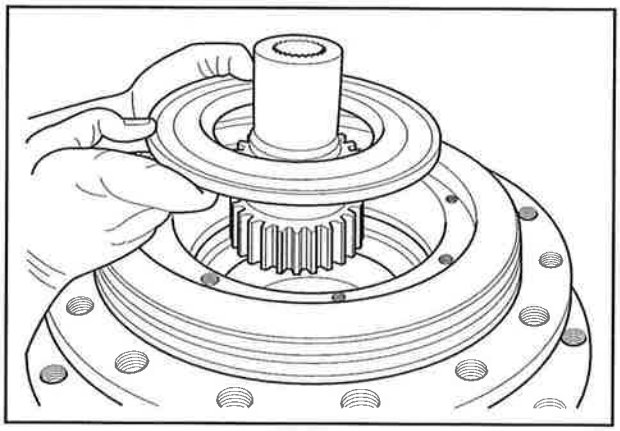

22

6. By using pliers remove the circlip (33) from its seat in the brake shaft (28).

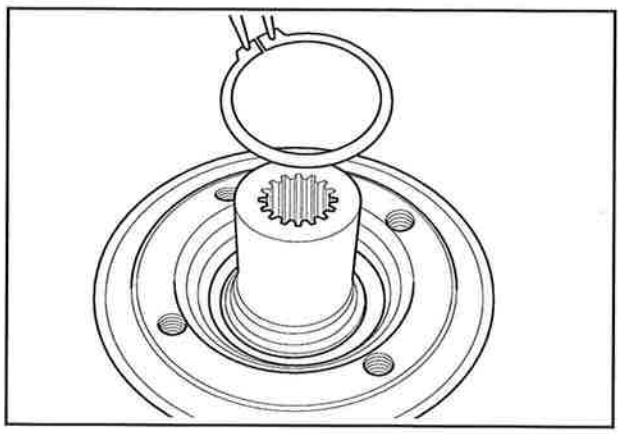

23

7. By using a puller and a metal stopper remove the retainer disc (29) from its seat in the brake shaft (28).

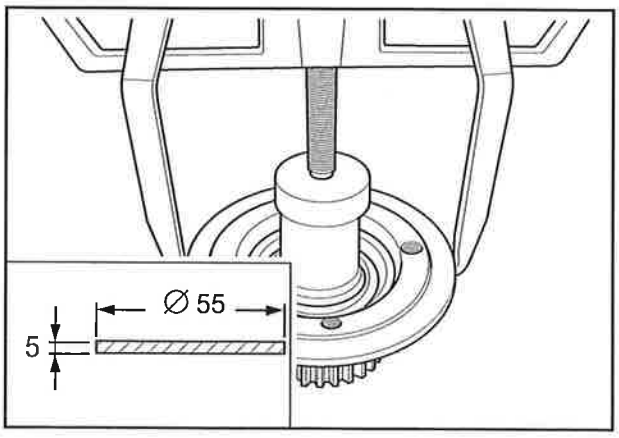

24

8. Remove the spring retainer disc (29).

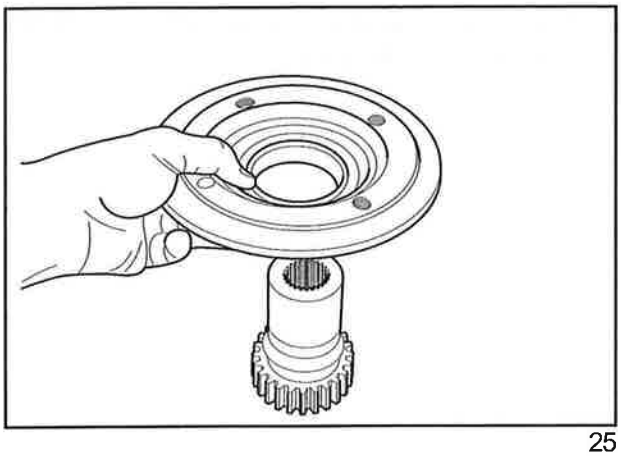

25

9. By using a puller remove the spacer (27) from the brake shaft (28).

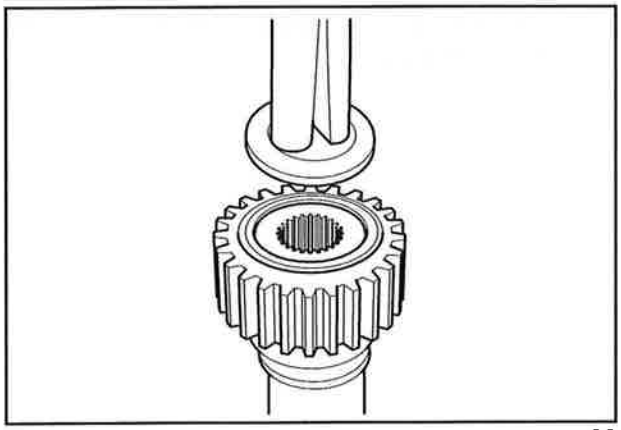

26

10. By using pliers remove the circlip (32) from its seat in the retainer disc (29).

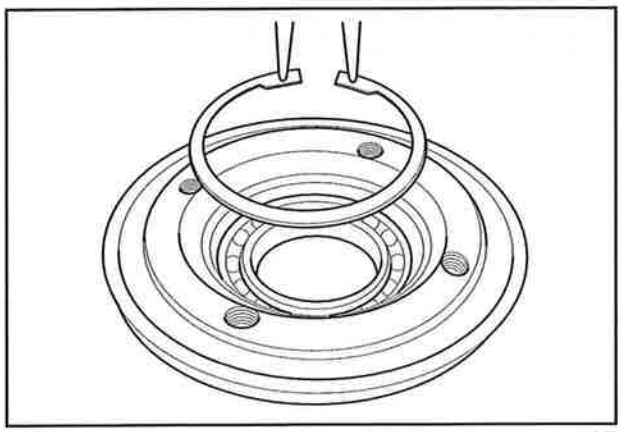

27

11. Remove the bearing (31) from its seat in the retainer disc (29).

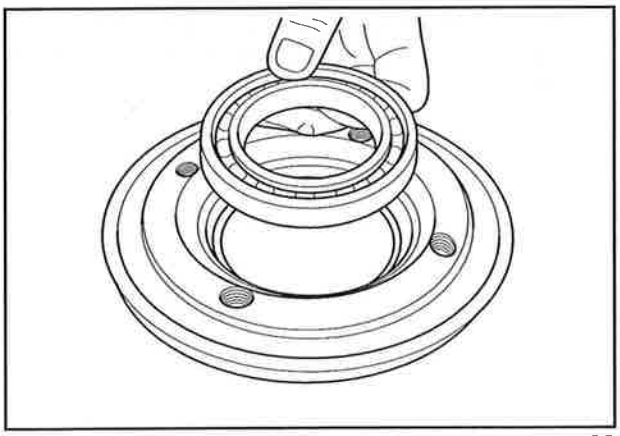

28

12. Mark the position of the springs (26) as a reference for the reassembling step.

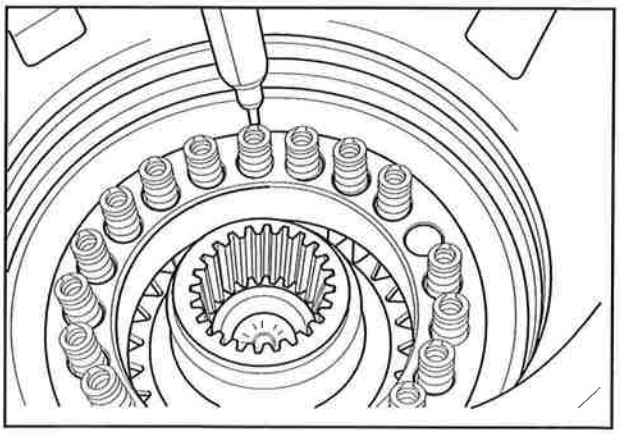

29

13. Remove the springs (26) from their seats in the brake piston (25).

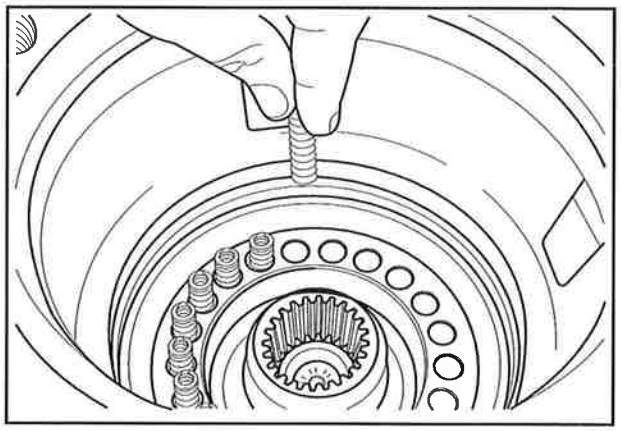

30

14. By using a puller remove the brake piston (25) from the flanged hub (18).

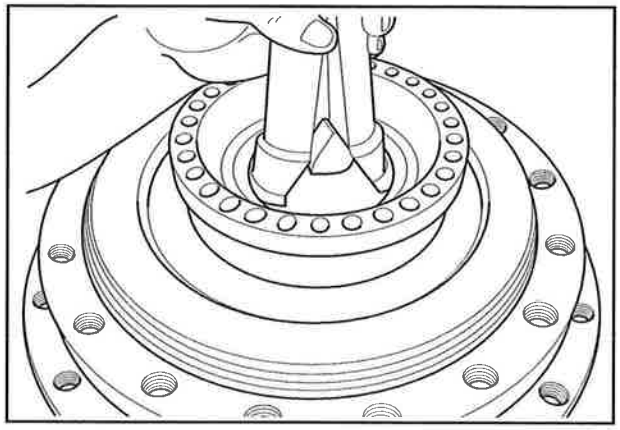

31

15. Remove the O-ring seals (22-23) and the backup rings (21-24) from their seats in the flanged hub (18).

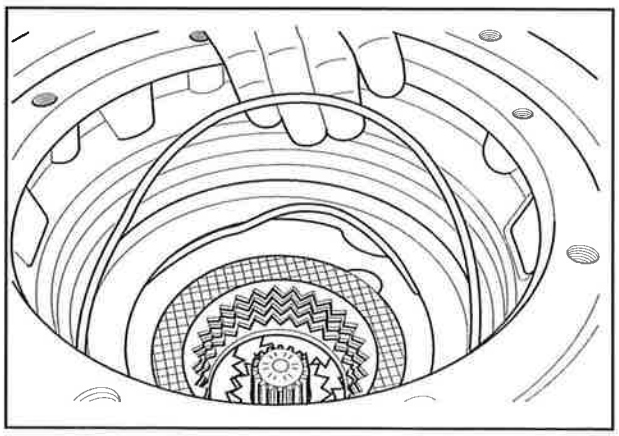

32

16. Remove brake discs pack (19-20).

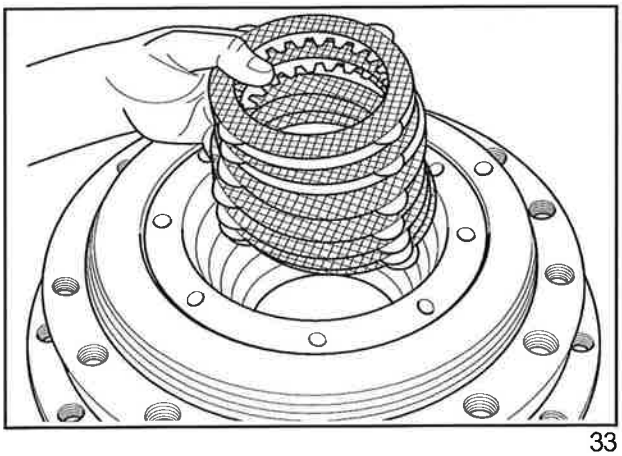

33

17. Turn the gearbox upside down and unscrew the nos. 2 filling-draining plugs (4) and the leel plug (5) from the end cover (6).

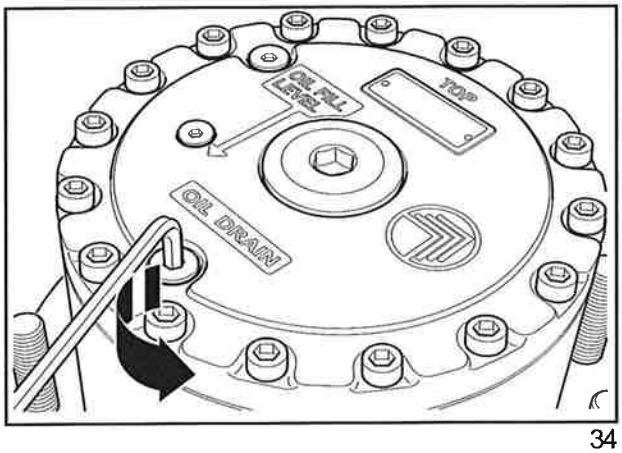

34

18. Unscrew the disengagement plug (3) from the end cover (6).

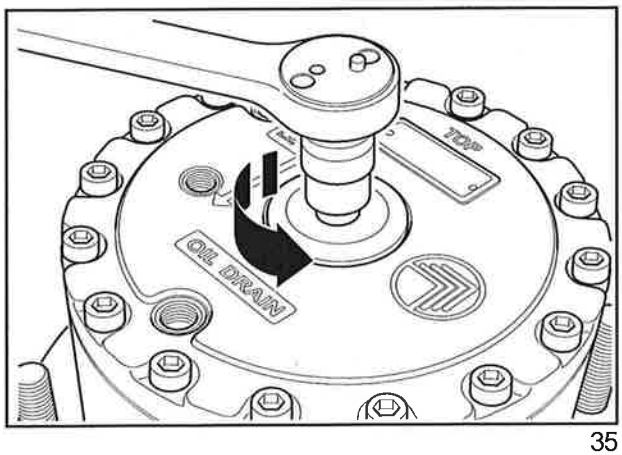

35

19. Remove the O-ring seal (2) from its seat in the disengagement plug (3).

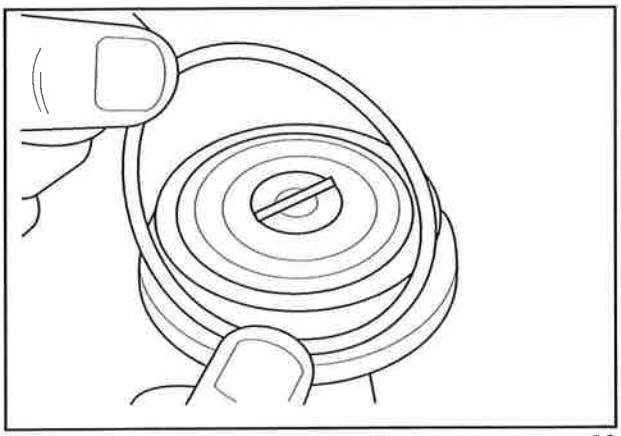

36

20. Unscrew the nos. 14 screws M10X85 (1), grade 8.8, from the end cover (6).

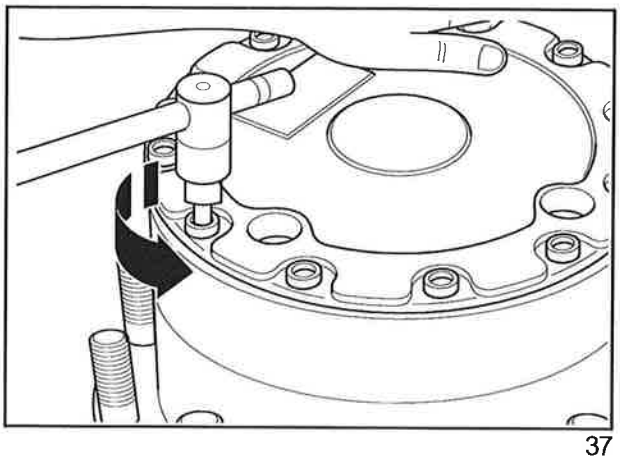

37

21. Remove the end cover (6).

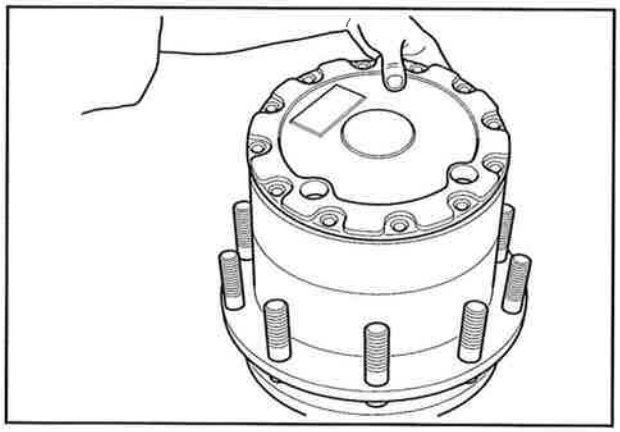

38

22. Remove the O-ring seal (7) from its seat in the end cover (6).

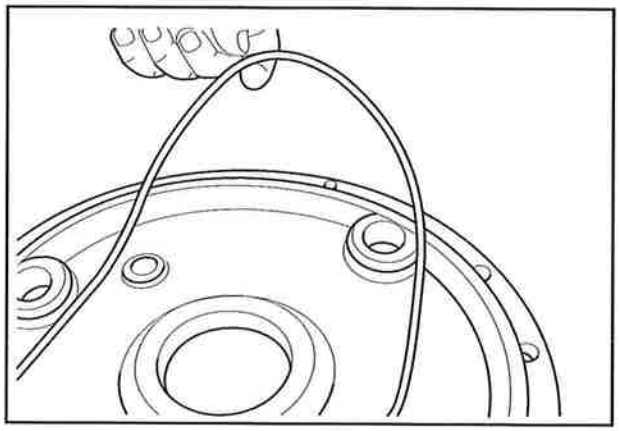

39

23. Remove the 1st reduction sun gear (8).

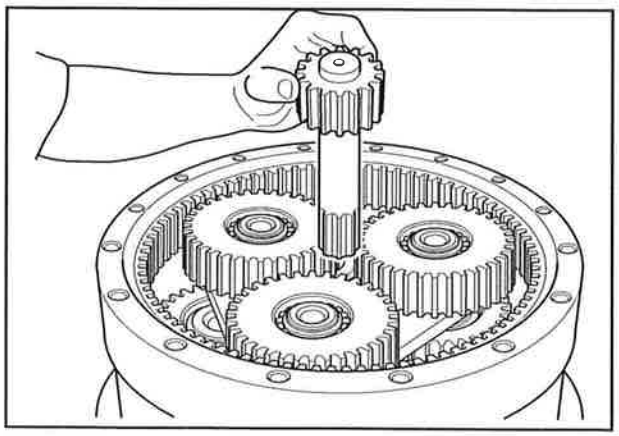

40

24. Remove the 1st reduction assembly (9).

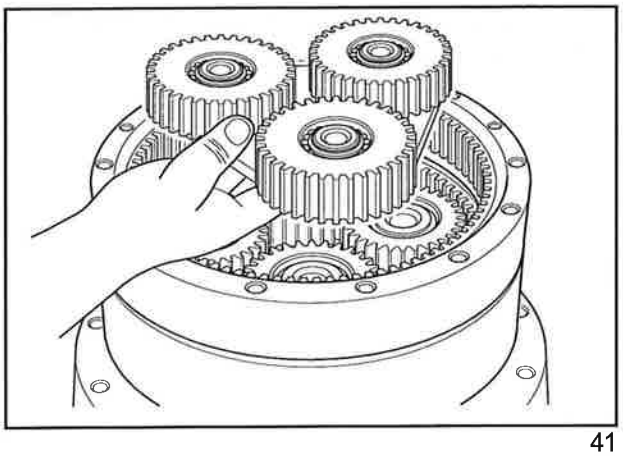

41

25. Remove the toothed ring (10).

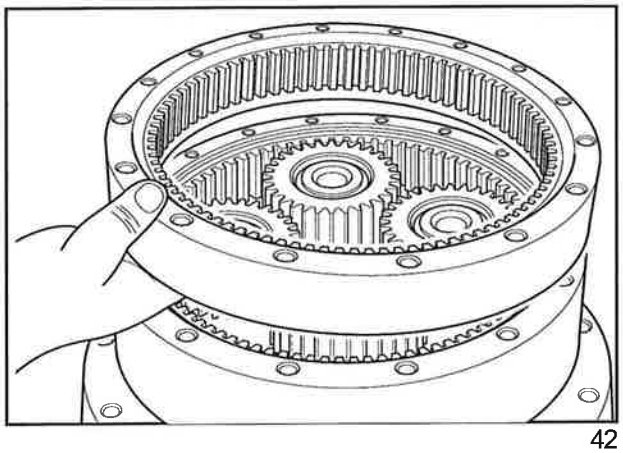

42

26. Remove the O-ring seal (11) from its seat in the toothed ring (10).

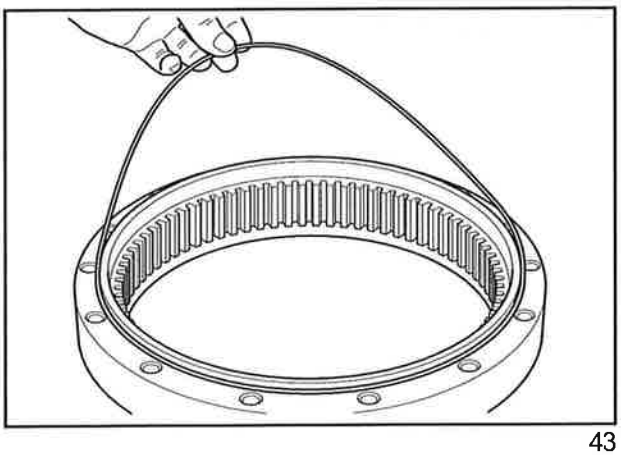

43

27. By using pliers remove the circlips (12) from their seats placed in the flanged hub's pins (18).

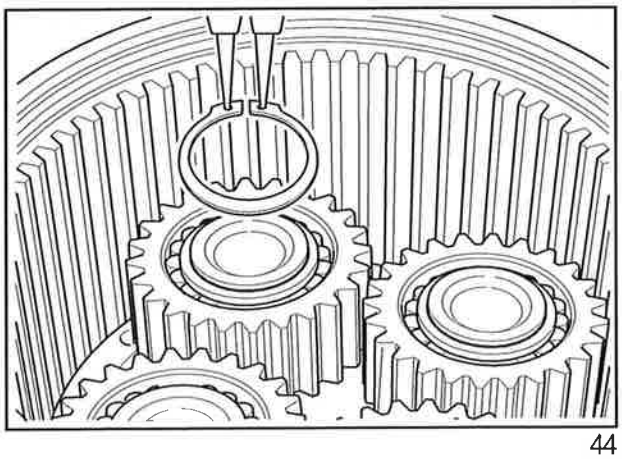

44

28. By using a puller remove the planet assemblies of the 2nd reduction (13).

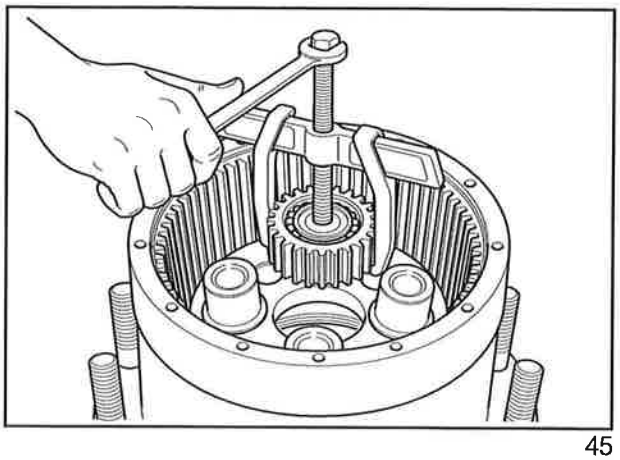

45

29. Remove the spacers (14) from their seats placed in the flanged hub's pins (18).

NOTE: *In order to proceed with the gearbox disassembly, it is now necessary to remove it from the machine and bring it to a properly equipped workshop.*

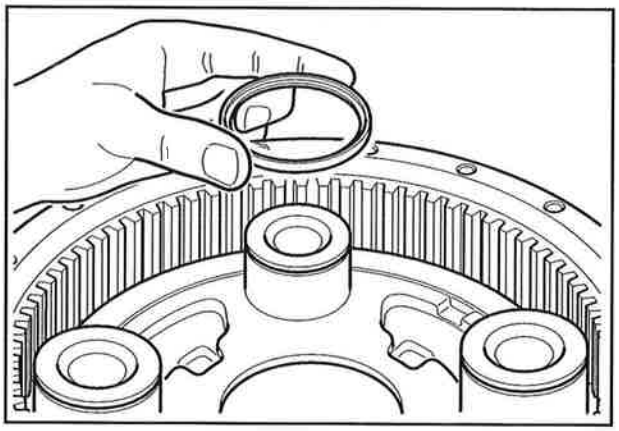

46

30. By using a drill remove the calkings on the ring nut (15).

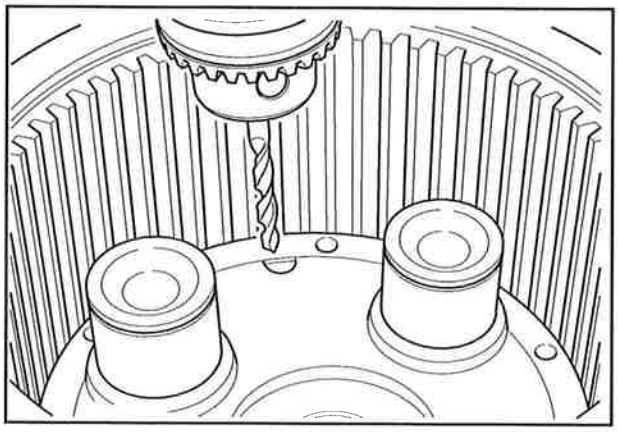

47

31. By using a tackle place the torque multiplier on the ring nut (15).

By using the torque multiplier tighten the ring nut (15).

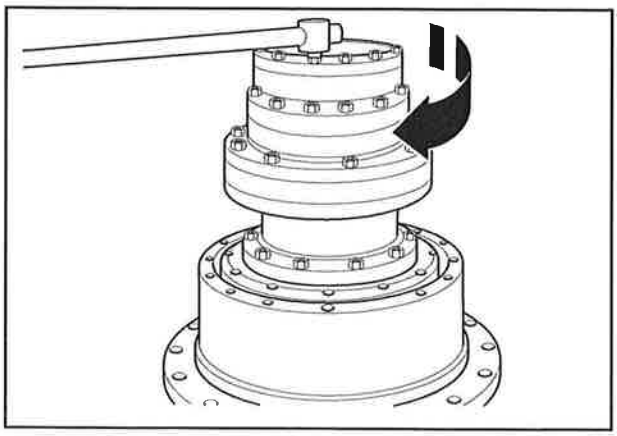

48

32. Take out the ring nut (15).

⚠ WARNING ⚠

In case of lifting of the unit, screw partially the ring nut (15) on the flanged hub (18) to avoid that the gearbox housing (16) falls down.

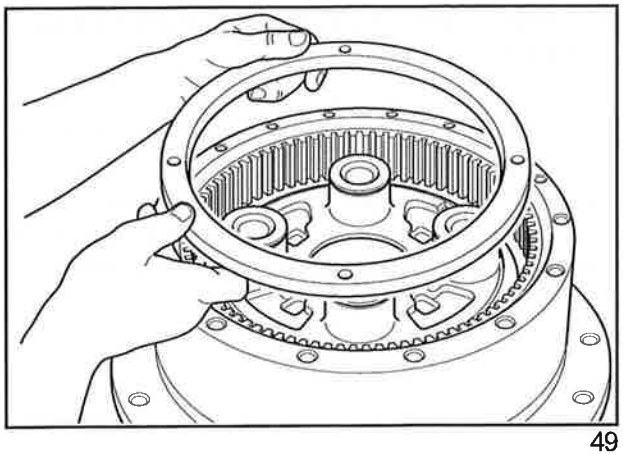

49

33. By using a puller and a metal stopper, remove the flanged hub (18) from the gearbox housing (16).

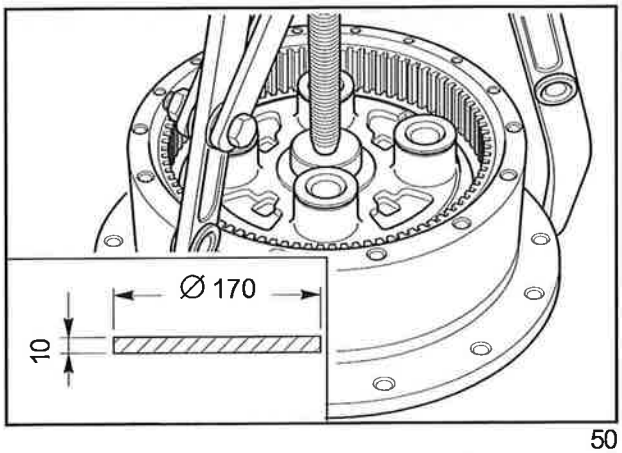

50

34. By using a tackle remove the gearbox housing (16) from the flanged hub (18).

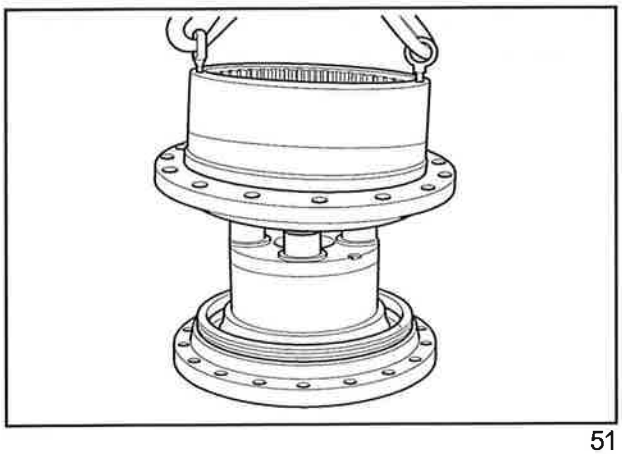

51

35. Assemble the tool on the bearing inner raceway and turn the screws, alternately, until comes out.

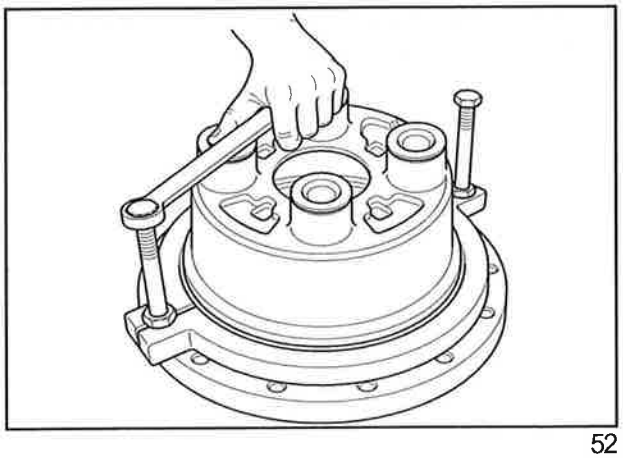

52

36. Remove the bearing inner raceway from the flanged hub (18).

⚠ WARNING ⚠

In case of oil leakages, it might be necessary to check and eventually replace the lifetime seal (17), which means both the steel rings and the O-ring seals.

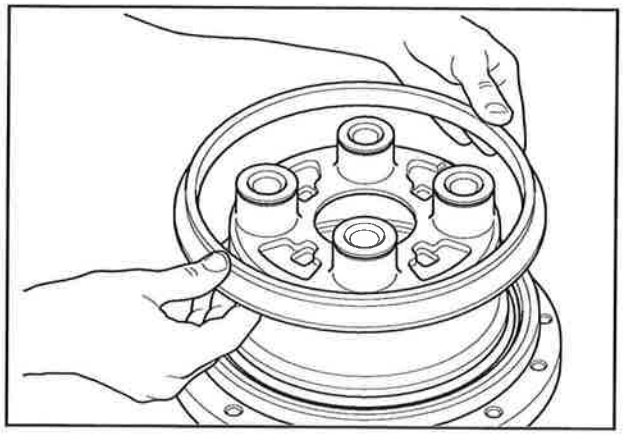

53

37. Remove the half seal (17) from the flanged hub (18).

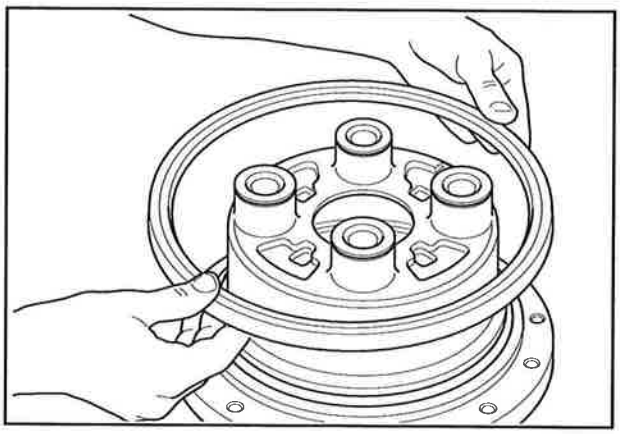

54

38. Remove the 1st ball row from the outer raceway of the gearbox housing (16).

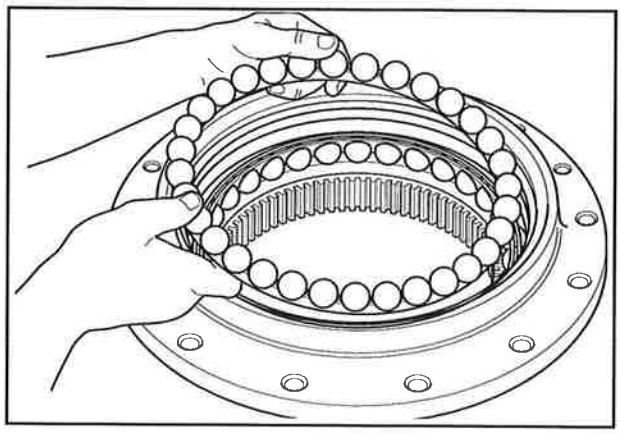

55

39. Remove the 2nd ball row from the outer raceway of the gearbox housing (16).

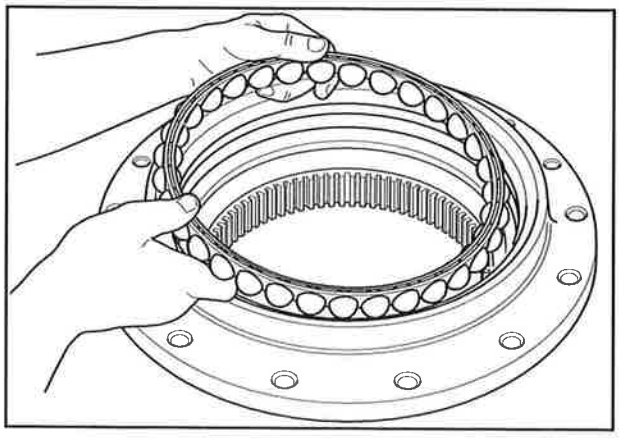

56

40. Remove the bearing inner raceway from the gearbox housing (16).

NOTE: *The disassembly ends with the above operation. All items are now available for the necessary inspections.*

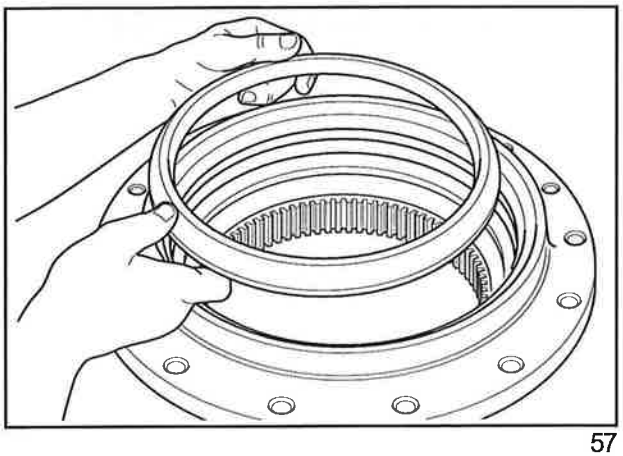

57

Evaluation that pieces to replace

The pieces that are subject to general wear and tear are the following:

- Gears
- Pinion shaft
- Bearings
- Seals

Replace the used or irregular parts respecting the following steps:

1. Accurately remove dirt, and in particular properly clean the seals, bearings and locking rings seating.
2. Lubricate the parts before connecting them.
3. In the case of damaged gears, for example a planetary, do not proceed to replace the individual gear but the entire reduction assembly.
4. When reconnecting a part always replace all the seals involved.
5. Replace all the damaged parts with original spare parts and doing so follow all the steps given by the manufacturer.

Gearbox reassembly

1. Place the bearing inner raceway in the gearbox housing (16).

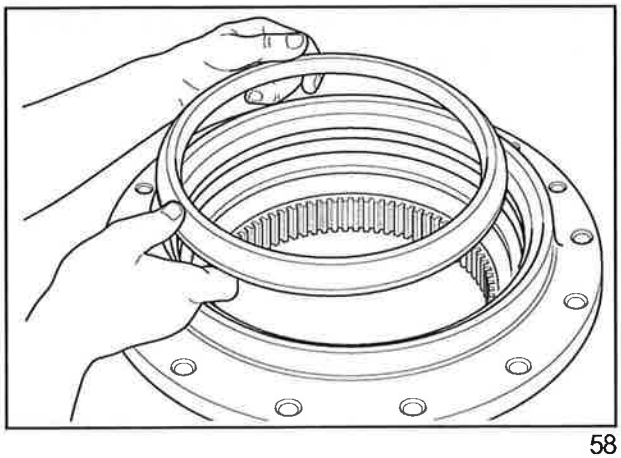

58

2. Assemble the balls to the plastic supports.

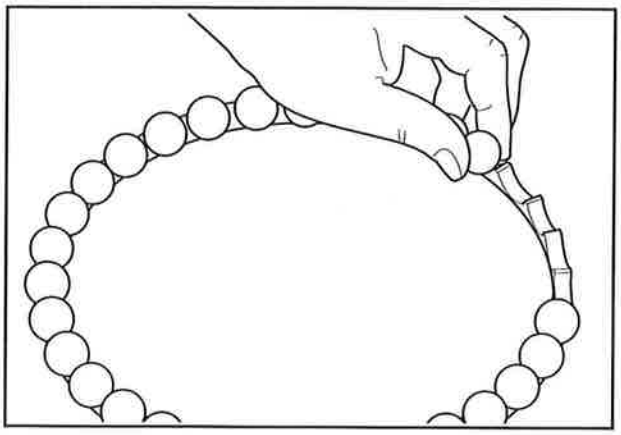

59

3. Assemble the 1st ball row in the outer raceway of the gearbox housing (16).

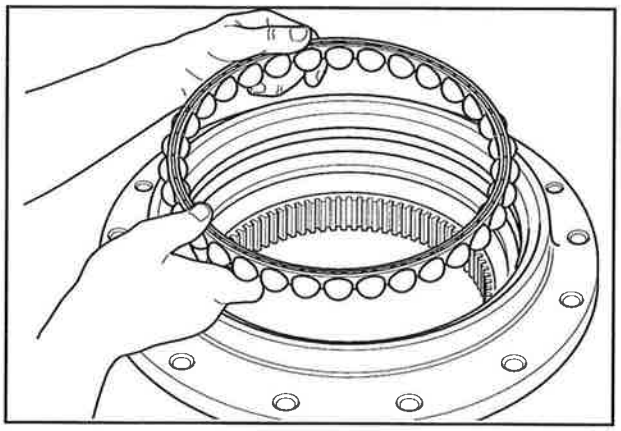

60

4. Assemble the 2nd ball row in the outer raceway of the gearbox housing (16).

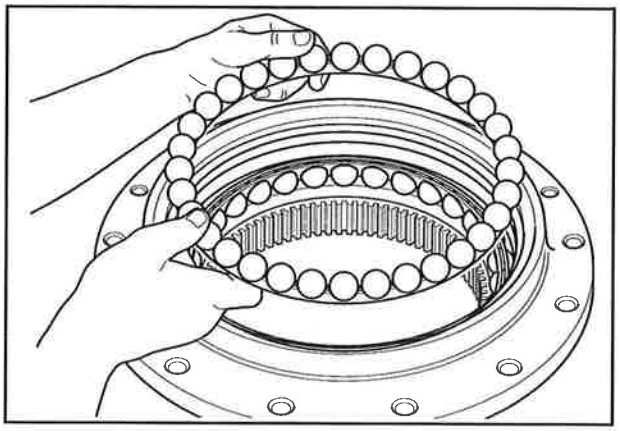

61

5. Place the bearing inner raceway in the gearbox housing (16).

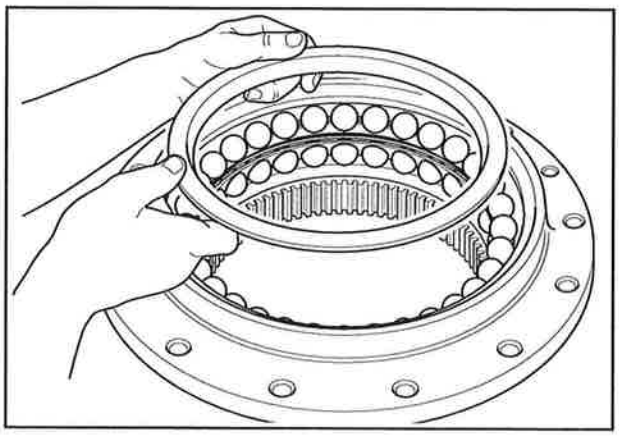

62

Make ready of the lifetime seal

1. Carefully clean the seats (A and B) using, if necessary, metallic brushes or solvent (surfaces in contact with or (C) must be perfectly clean and dry).
2. Make sure that sealing surfaces (D) of metal rings (E) are free from scratches, dinges or foreign substances; metallic ring surfaces must be perfectly clean and dry. We suggest to dip the metallic rings in volatile solvent or industrial degreasing alcohol.
3. Carefully clean the lapped surface (D) of metal rings (E) and remove dust or fingerprints. Then lubrificate them with a thin oil film, taking care not to oil the other components.

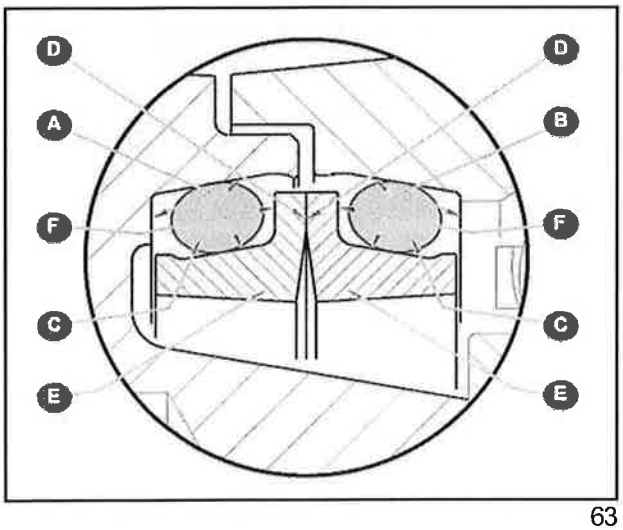

63

4. Assemble the half seal (17) on the special tool.

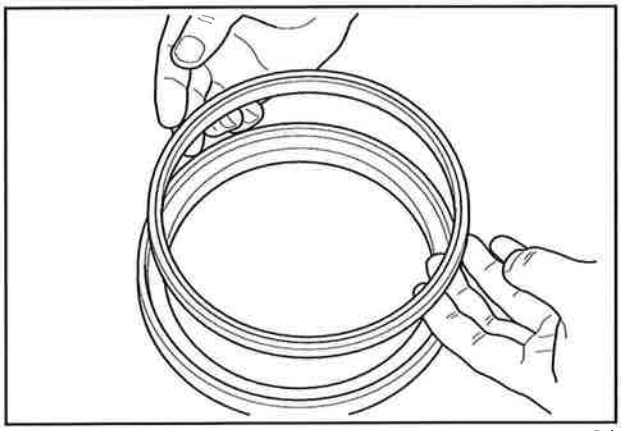
64

5. Assemble the 1st half seal (17) on the gearbox housing (16).

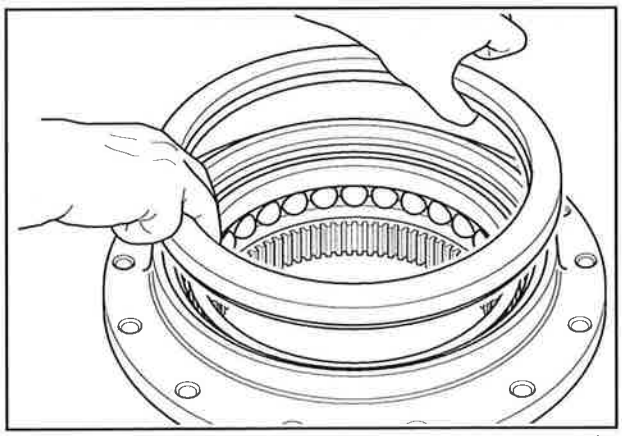
65

6. Assemble, by using the same special tool, the 2nd half seal (17) on the flanged hub (18).

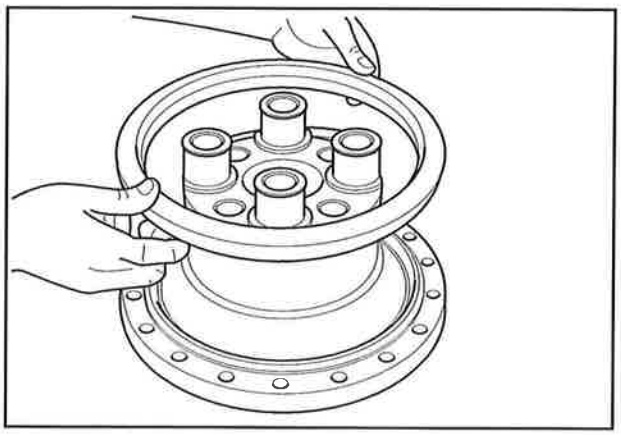

66

NOTE: *Correct lifetime seal (17) assembly check.*

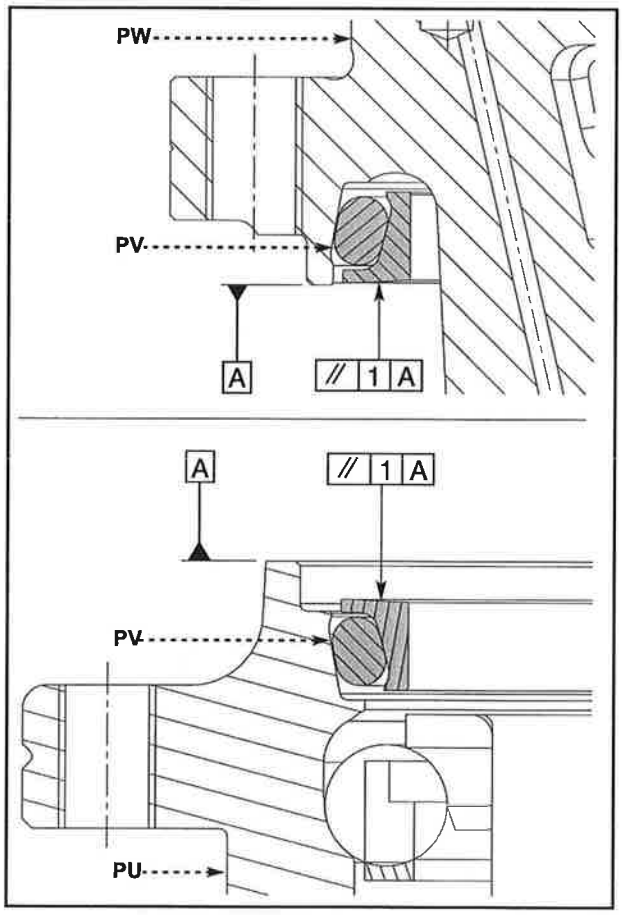

67

7. Clean carefully the seal faces (17).

⚠ WARNING ⚠

Apply a thin oil film on the entire metallic face of one or both seals. Oil must not contact surfaces other than the sealing faces.

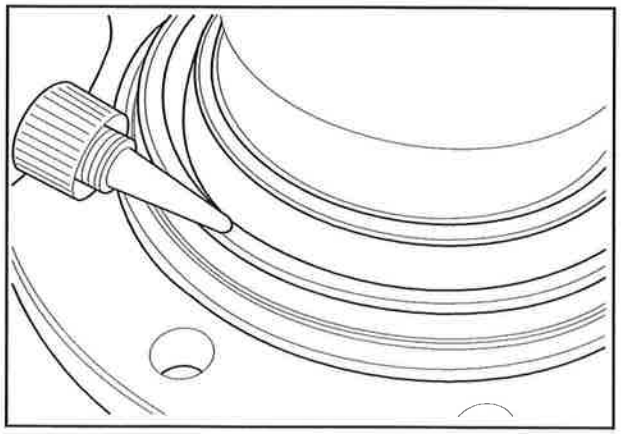

68

8. By using a tackle, place the gearbox housing (16) on a spacer.

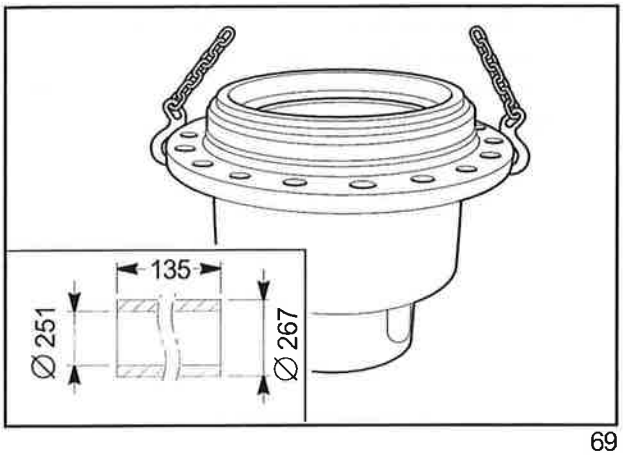

69

9. By using a tackle place the flanged hub (18) in the gearbox housing (16).

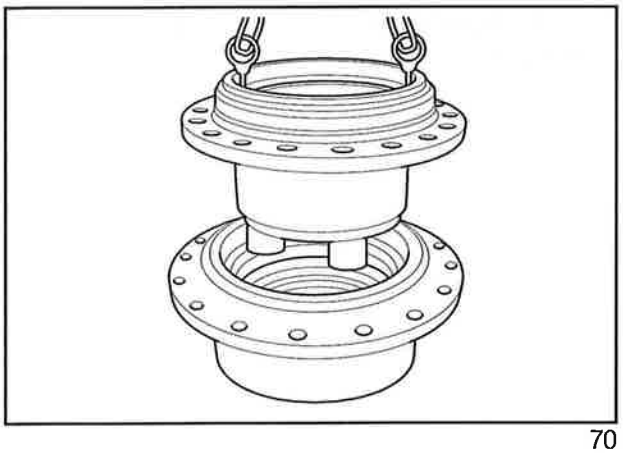

70

10. By using a press and a metallic stopper, push the flanged hub (18) against the shoulder on the gearbox housing (16) until assembling of the unit is complete.

NOTE: *Assemble a safety retainer to avoid the gearbox housing (16) comes out from the flanged hub (18) during the movement of the unit. Remove the safety retainer when the unit is positioned.*

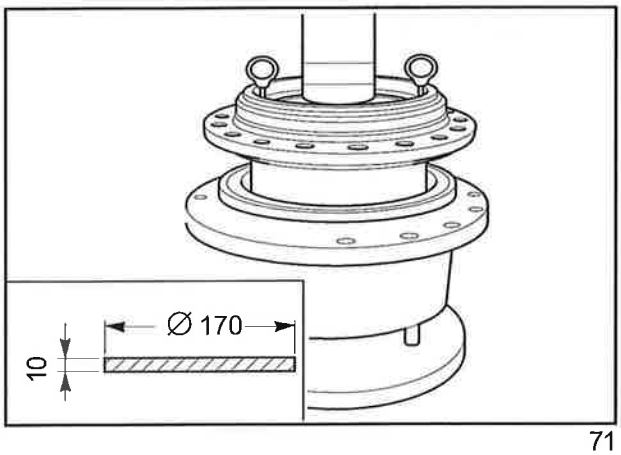

71

11. Place the ring nut (15).

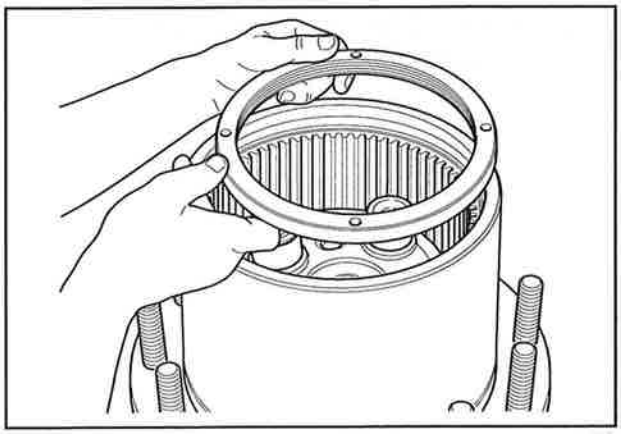

72

12. By using the multiplier, tighten the ring nut (15), by a torque wrench with an input multiplier torque of 143±5 Nm corresponding to an output multiplier torque of 7250±250 Nm.

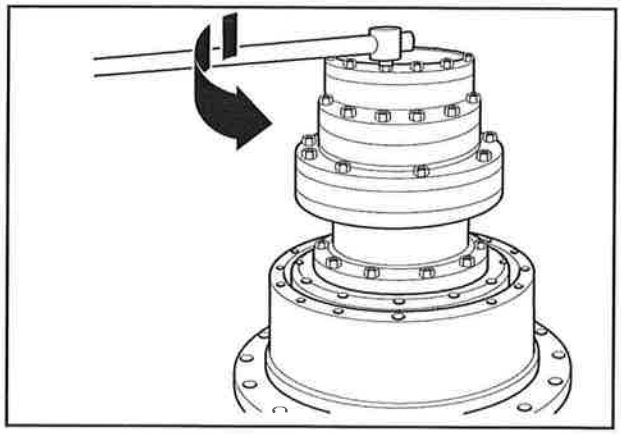

73

13. Stake the ring nut (15) near 2 seats of the flanged hub (18).

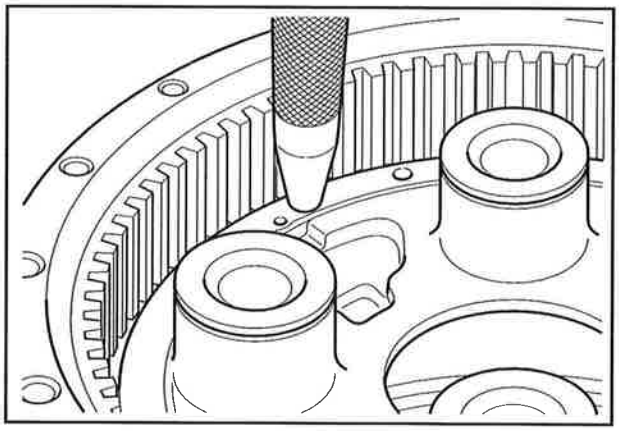

74

NOTE: *Stake Ø 4÷5 mm (depth 1÷1,5 mm).*

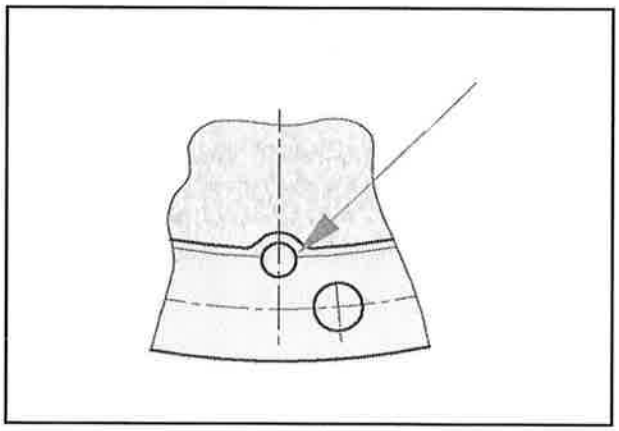

75

14. Assemble correctly the spacers (14) on the pins of the flanged hub (18).

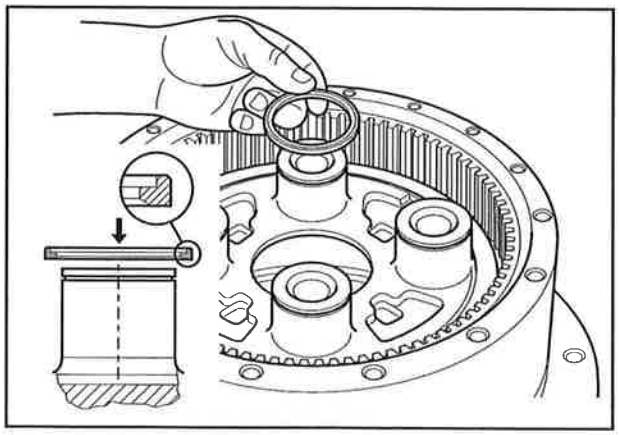

76

15. Place the reduction planet assemblies of the 2nd reduction (13) on the pins of the flanged hub (18).

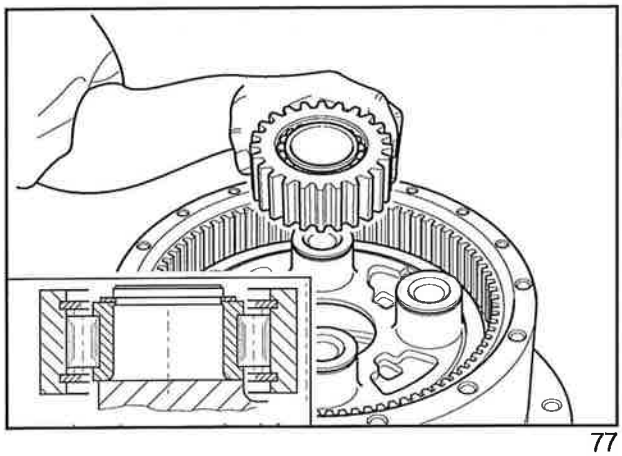

77

16. By using a stopper and a rubber hammer push the planet assemblies of the 2nd reduction (13) against the shoulder until assembly is complete.

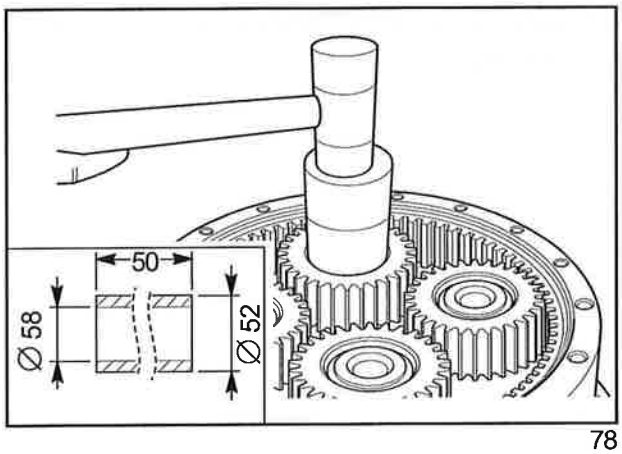

78

17. By using pliers, assemble the circlips (12) in the flanged hub pin seats (18).

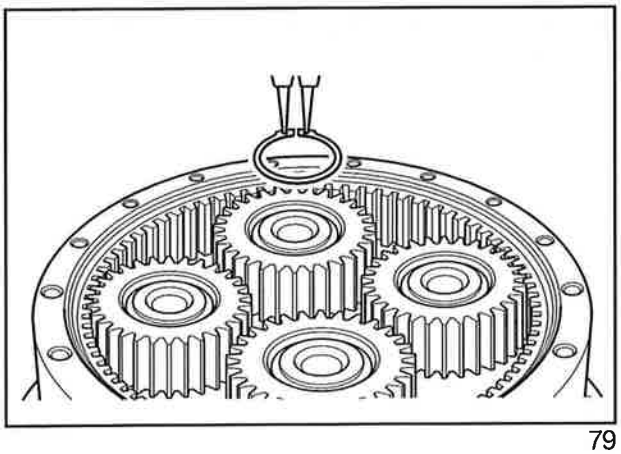

79

18. Insert the 2nd stage sun gear (9).

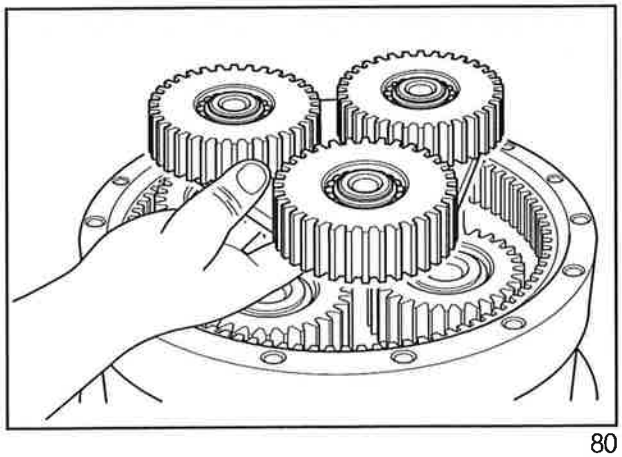

80

19. Insert the 1st reduction sun gear (8).

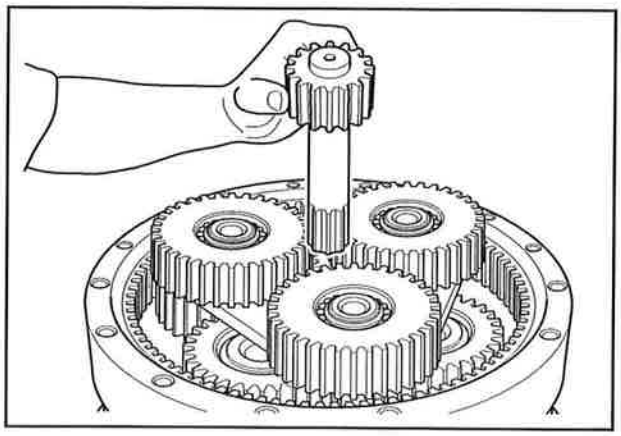

81

20. Fit the O-ring seal (11) into its seat in the toothed ring (10).

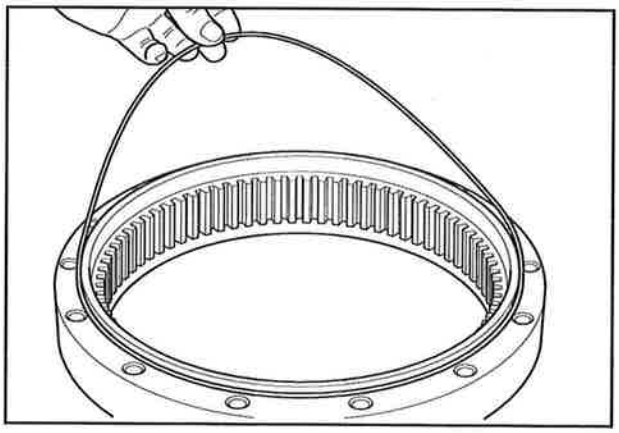

82

21. Place the toothed ring (10) on the gearbox housing (16).

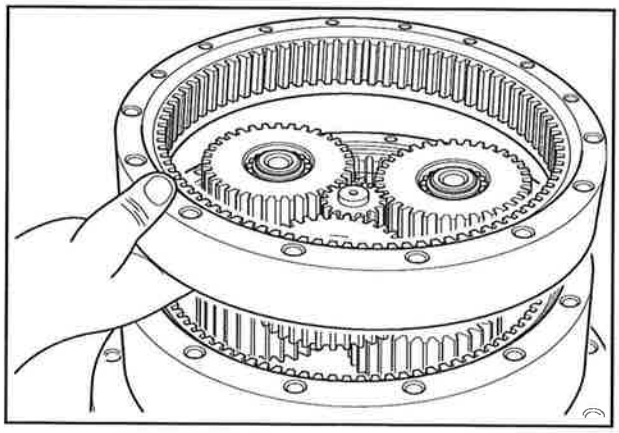

83

22. Fit the O-ring seal (7) into its seat in the end cover (6).

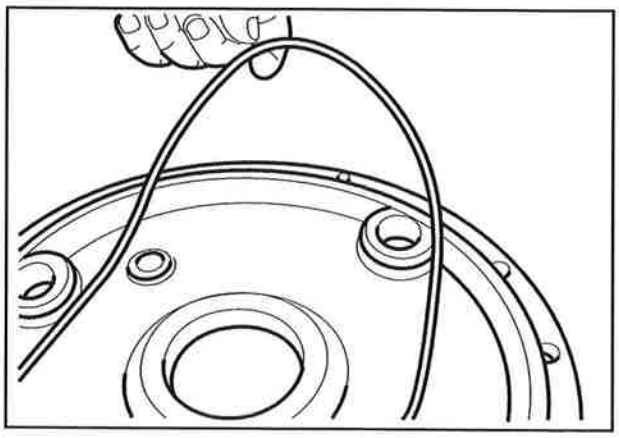

84

23. Place the end cover (6) on the toothed ring (10).

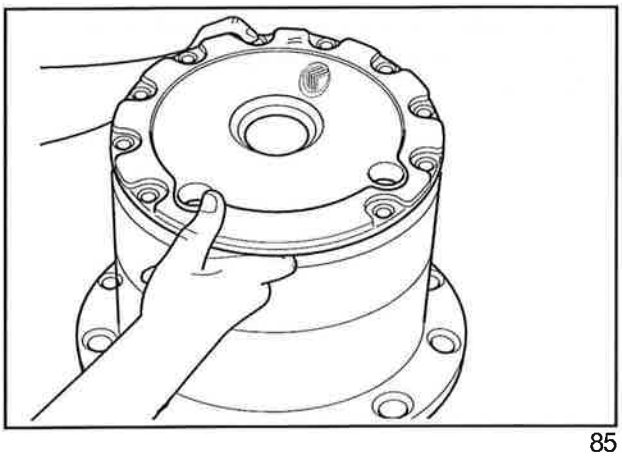

85

24. Tighten the nos. 16 socket head screws M10x85 (1), grade 8.8, by a torque wrench at 50 Nm torque.

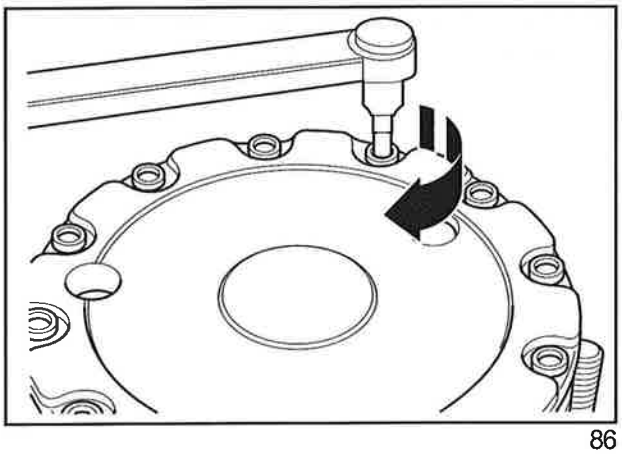

86

25. Fit the O-ring seal (2) into its seat in the disengagement plug (3).

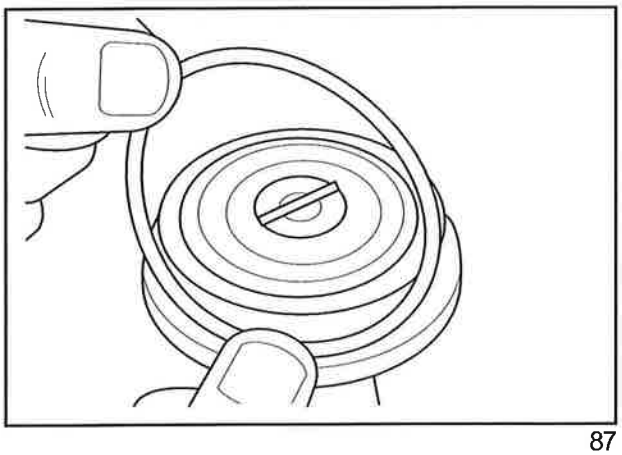

87

26. Insert the disengagement plug (3).

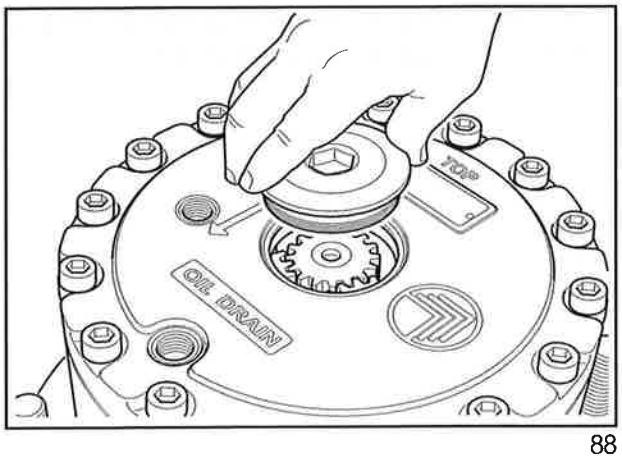

88

27. Tighten the disengagement plug (3) of the end cover (6) by a male hex head torque wrench at 90 ± 10 Nm torque.

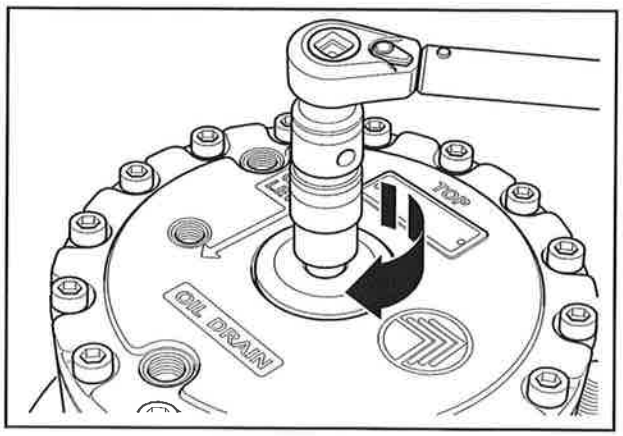

89

28. Insert the plugs (4) into the oil draing-filling holes of the end cover (6). Tighten the plugs by a torque wrench at 35 ± 5 Nm torque.

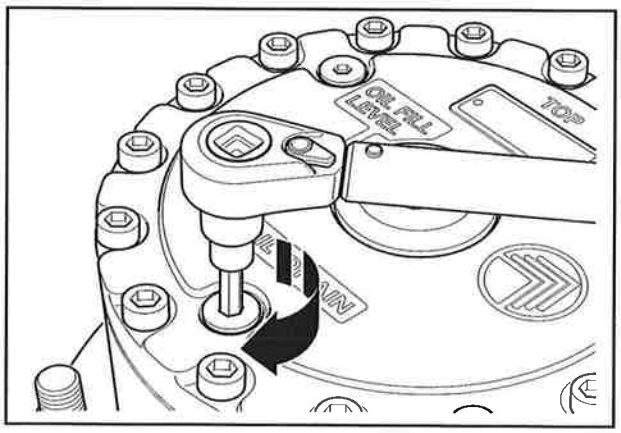

90

29. Insert the plug (5) into the oil level hole of the end cover (6). Tighten the plug by a torque wrench at 10 ± 2 Nm torque.

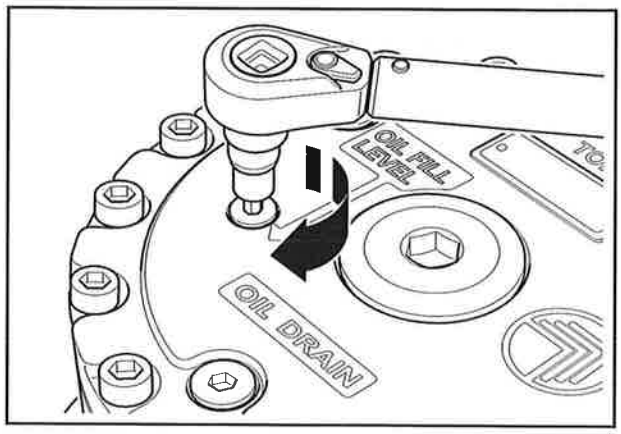

91

30. By using a rubber hammer assemble the spacer (27) in its seat in the brake shaft (28).

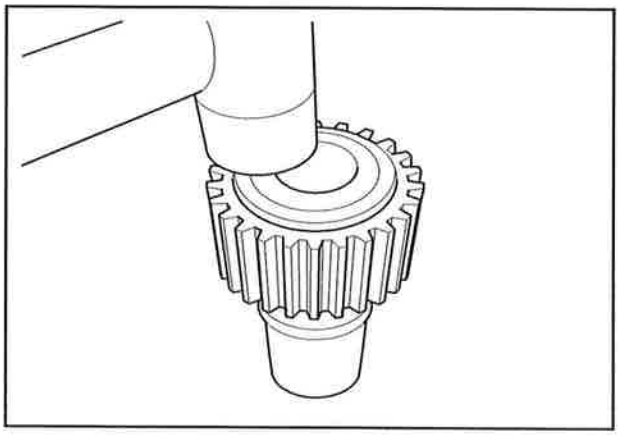

92

31. Turn the gearbox upside down and insert the brake shaft (28).

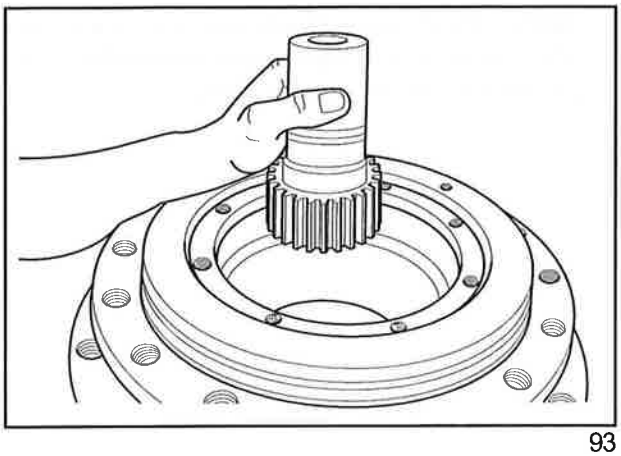

93

32. Assemble the brake discs package according to the following order: firstly, insert one sintered bronze disc with external teeth (20).

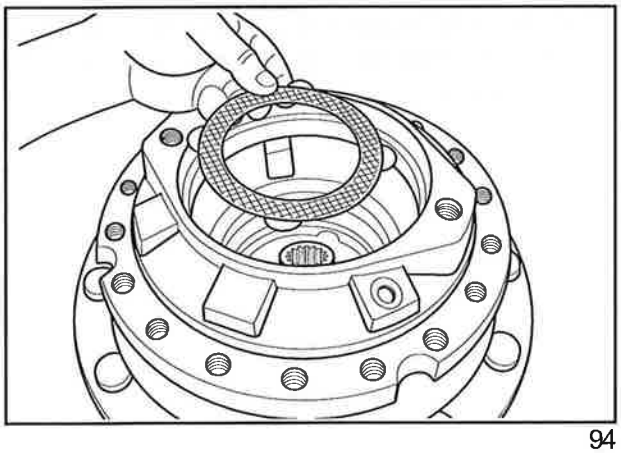

94

33. Then insert, an internally toothed steel disc (19). Repeat the operation until all 7 sintered bronze discs and 6 steel discs have been assembled.

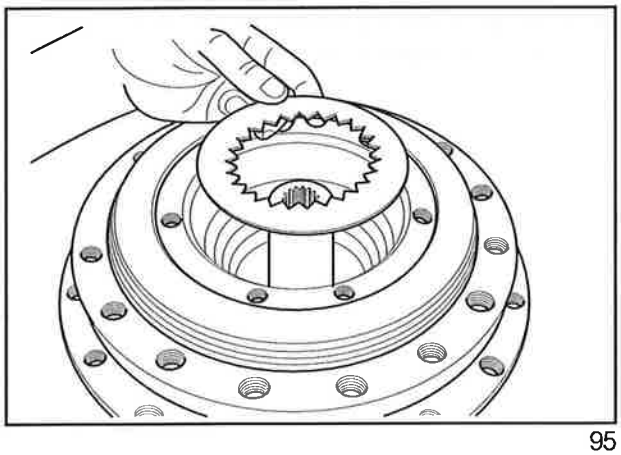

95

34. Lubricate the seals' seats inside the flanged hub (18) with oil and assemble the O-ring seals (22-23) and the backup rings (21-24). Lubricate the seals already fitted.

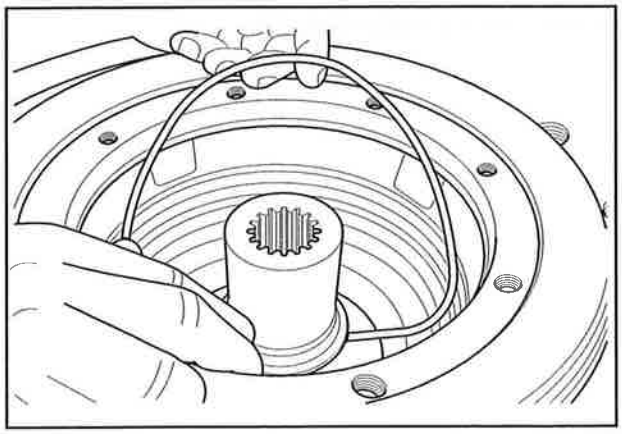

96

NOTE: *The O-ring seals (A) and a the backup rings (B) must be fitted in the seats according the mutual position as shown in the scheme.*

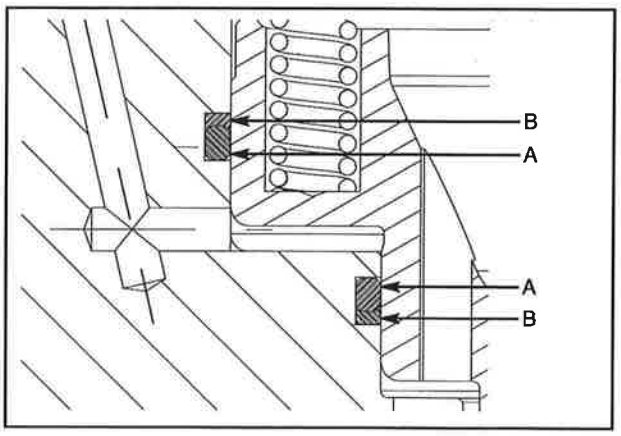

97

35. Insert the brake piston (25) inside the flanged hub (18), paying attention not to damage the seals already fitted.

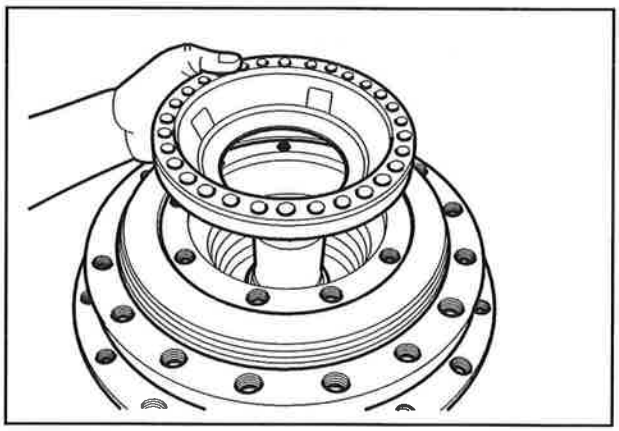

98

36. Insert the springs (26) into the holes in the brake piston (25) marked previously.

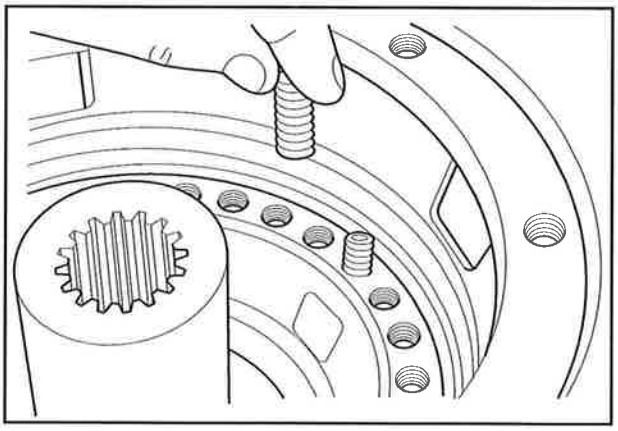

99

37. Remove the brake shaft (28).

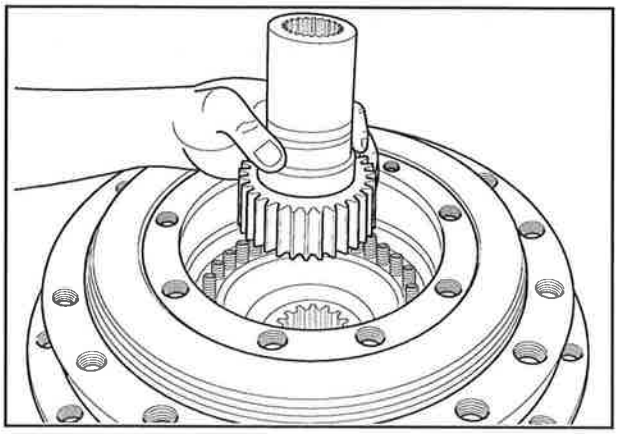

100

38. Insert the bearing (31) in the retainer disc (29).

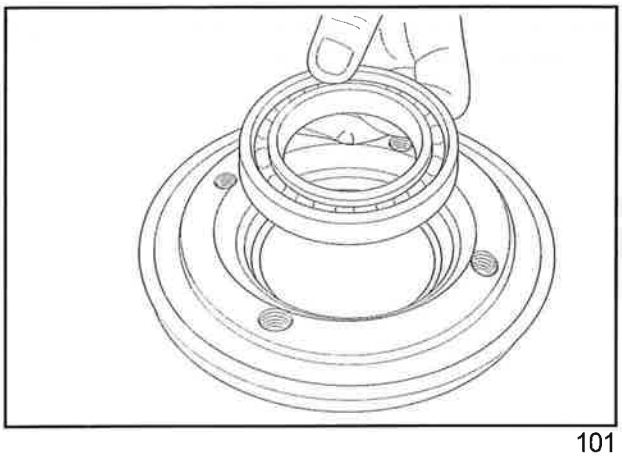

101

39. By using pliers assemble the circlip (32) in its seat in the retainer disc (29).

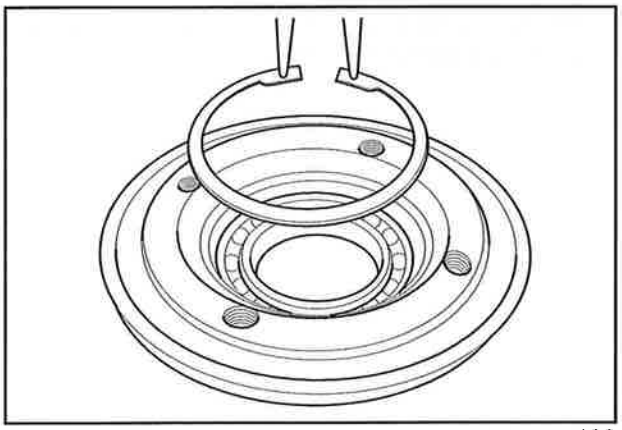

102

40. Insert the retainer disc (29) on the brake shaft (28).

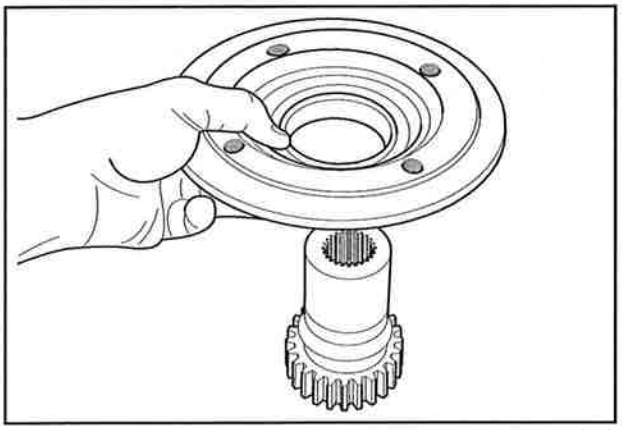

103

41. By using a rubber hammer and a metal stopper push the retainer disc (29) against the brake shaft (28).

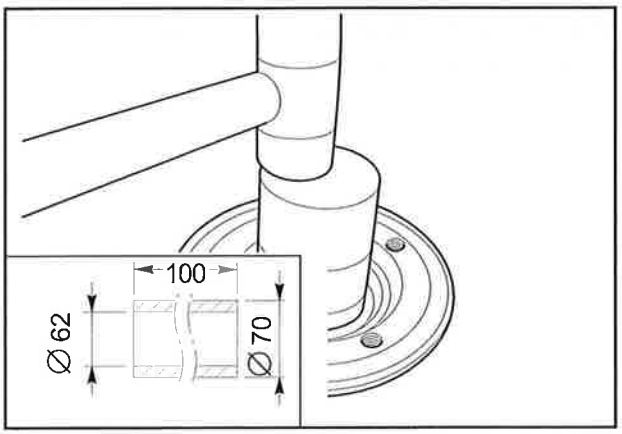

104

42. By using pliers assemble the circlip (33) into its seat in the brake shaft (28).

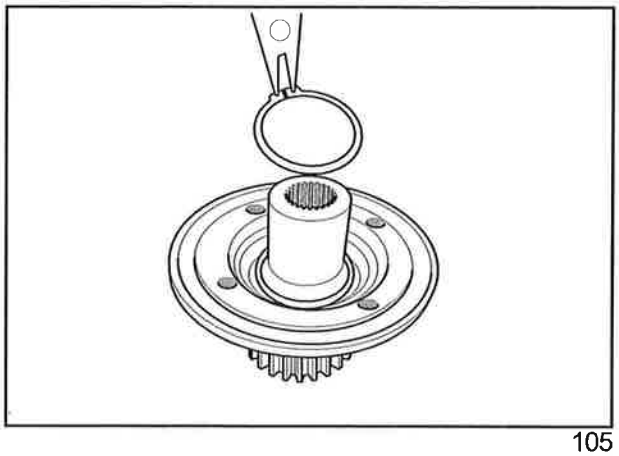

105

43. Insert the retainer disc/brake shaft unit (29-28) inside the flanged hub (18).

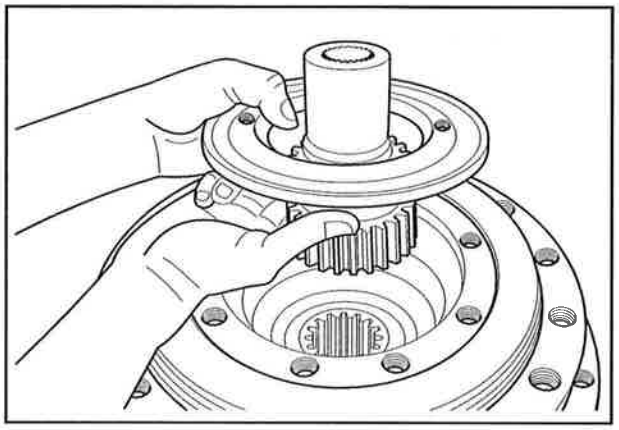

106

44. Place the equipment on the flanged hub (18) and turn the screw until it contrasts the force of the spring (26). By using pliers, assemble the circlip (30) into its seat and take away the equipment.

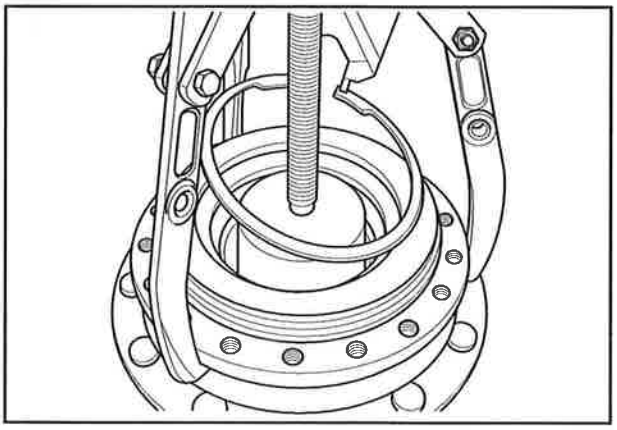

107

45. Fit the O-ring seal (34) into its seat in the motor adaptor flange (35).

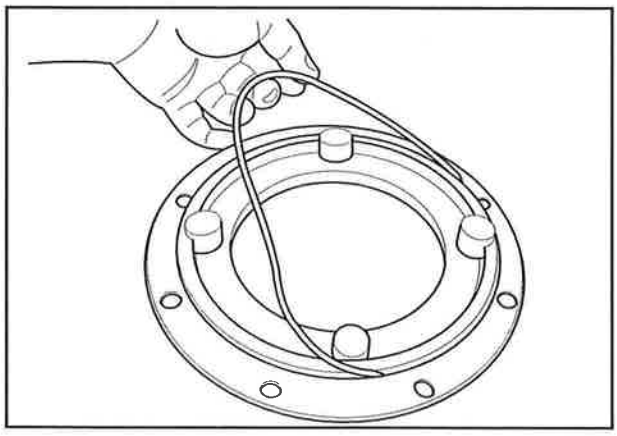

108

46. Place the motor adaptor flange (35) on the flanged hub (18).

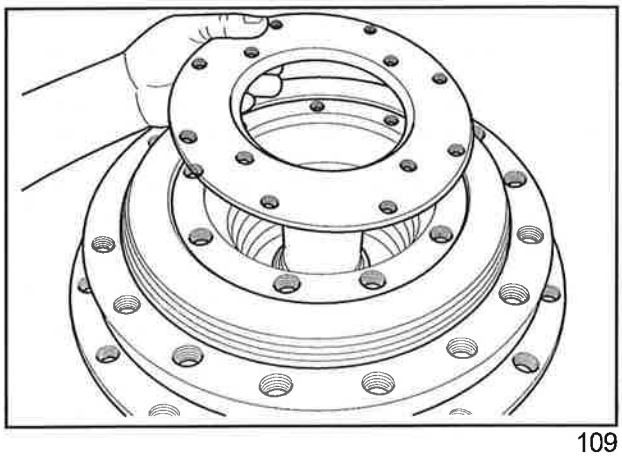

109

47. Tighten the nos. 8 socket head screws M10x25 (37), grade 8.8, by a torque wrench at 50 Nm torque.

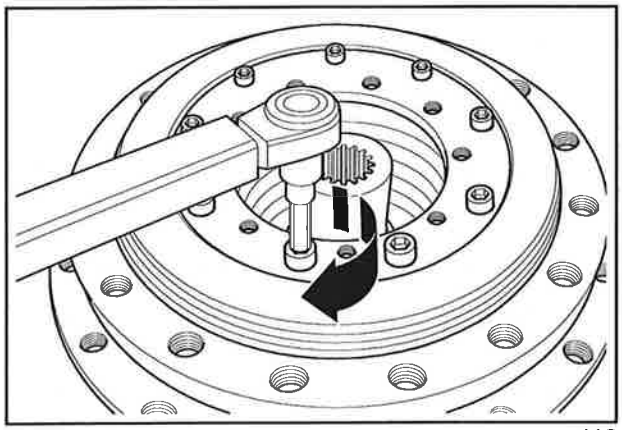

110

NOTE: *Before assembling the hydraulic motor, verify by a depth slide gauge the correct assembly of the unit checking the axial distance as shown in the scheme.*

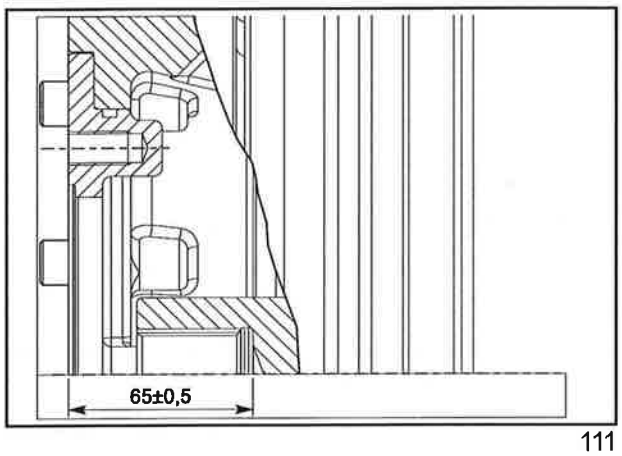

111

Final test and reinstallation

Check the product by remounting it to the machine.

Check the function of the transmission following all the checks shown in "First start up and running in".

If work on the brake was undertaken, it is important to check that there are no oil leakages. Follow the procedure below:

1. Connect the pressure pilot line with the manometer (with a base scale of 100 bars) to the brake release port (4).
2. Open the flow valve and release the brake with the pilot pressure of 50 bar.
3. Close the flow valve and keep the brake released 3 minutes or longer.
4. Using the manometer, check that the pressure remains constant.

   NOTE: *If the pressure drops it may mean that the brake seals are not tight and consequently they must be replaced or it may mean that the reassembling was not completed properly.*
5. After having reassembled the gearbox, fit the hydraulic motor.
6. Fill the gearmotor with the lubricant oil as shown in "Oil filling".

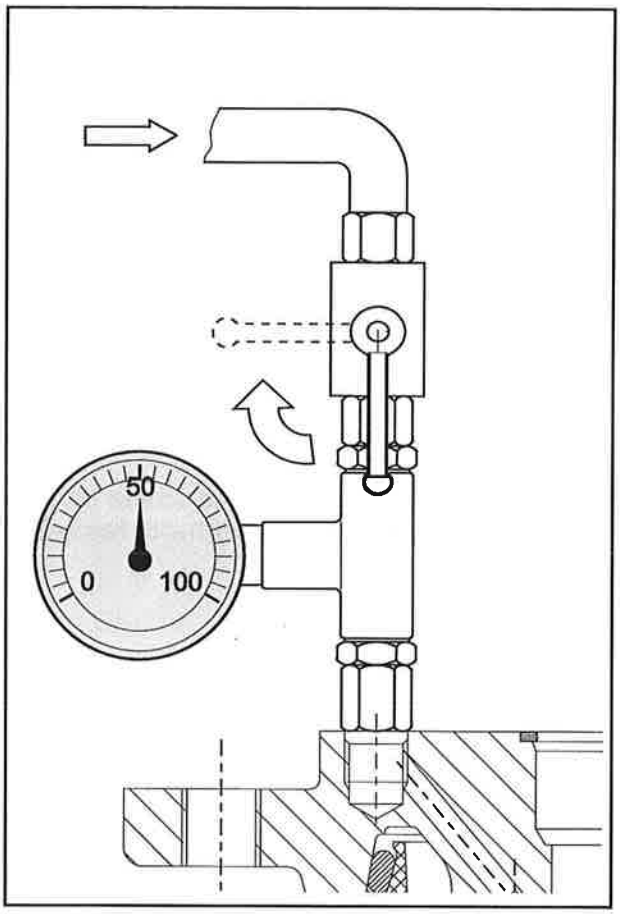

112

Dismantling and destroying the product

When dismantling the gearmotor follow the indications given below:

1. Remove the gearbox from the machine frame and let the lubricant oil flow.
2. Completely dismount the gearbox and remove all oil and grease from its parts.
3. Send all dangerous and/or polluted parts to the authorised demolishing centres whilst keeping in line with respective local rules and regulations.

Trouble shootings

Anomalies	Cause	Solution
External oil leakage		
- From the lifetime seal	- Lifetime damaged	- Replace lifetime seal
- From the end cover	- O-ring seal damaged	- Replace O-ring seals
- From plugs	- Plug seal damaged	- Replace plug seal
	- Plugs or screws loose	- Tighten the plugs/screws
Too much noise		
- Hydraulic noise	- Hydraulic circuit malfunctioning	- Verify hydraulic circuit
- Inside the gearmotor (reductions)	- Internal damage	- Check the gearbox
Other		
- Overheating	- Insufficient oil level	- Check the oil level and refill if necessary
	- Hydraulic oil too warm	- Check the hydraulic circuit
	- Brake not fully released	- Check brake release pressure
Parking brake malfunctioning		
- Insufficient braking torque	- Brake discs worm	- Replace brake disc pack
	- Damaged parts	- Check brake components
- Sprocket locked	- Parking brake locked	- Check the complete brake release
	- Mechanical components damaged	- Replace damaged parts

ENGINE

When it is necessary to perform major repairs, the engine must be removed from the engine compartment; it can be removed alone or as one assembly, with the hydraulic pump drive gearbox and the pumps.

Engine Removal - Method 1

1. Remove the screens from the engine top.
2. Disconnect the exhauster and the air filter from the engine.
3. Drain the coolant from the engine.
4. Remove the engine fan skirt and the piping from the engine compartment.
5. Disconnect the harness, the pressure adjusting cable and the fuel lines from the engine.
6. Drain the engine oil and disconnect the draining line and the remote oil filter.
7. Support the pump gearbox and the pumps and disconnect the gearbox from the flywheel.
8. Remove the bolts fastening the engine assembly to the engine compartment.
9. Slide the engine over its support and, with the engine out of the drive pump shaft, lift it to remove it from the engine compartment.

Perform all repairs and re-assemble the engine, following the inverse procedures described above.

Engine Removal - Method 2

1. Remove the screens from the engine top.
2. Disconnect the exhauster and the air filter from the engine.
3. Drain the coolant from the engine and remove the hoses from the radiator.
4. Remove the engine fan skirt and the piping from the engine compartment.
5. Disconnect the harness, the pressure adjusting cable, the propulsion cables and the fuel lines from the engine.
6. Drain the engine oil and disconnect the draining line and the remote oil filter.
7. Drain the oil from the pump box and the line.
8. Isolate the hydraulic oil (close the registers) and lower the oil level to prevent losses.
9. Disconnect all hydraulic suction lines from the pump (***NOTE:*** *Plug all hoses ends to prevent the contamination with dirty).*
10. Disconnect all hydraulic hoses from the pumps *(**NOTE:** Plug all hoses ends to prevent the contamination with dirty).*
11. Remove the bolts fastening the engine assembly to the engine compartment.
12 Lift the engine and the gearbox assembly from the pump; remove them from the engine compartment.

Perform all repairs and re-assemble the engine, following the inverse procedures described above.

TRACK

DESCRIPTION

One of the main factors for the machine durability on duty is the correct track alignment; all rollers must be centralized in a line from the center of the sprocket tooth to the center of the front side idler wheel.

The second essential inspection is to check if all lower rollers on the track are leveled: any misalignment on these parts, whatever for worn parts, broken bearing or track chassis bending, indicates that the weight is not equally distributed for all rollers.

A premature failure will occur, unless the load distribution is kept. Because of this, never install a new roller to work with the old ones.

An easy way to check this condition in the field is to drive the machine on a hard surface for about one kilometer and, then, put your hands on each roller, sensing their temperature.

After assuring that the oil level is correct before this inspection, any roller that presents a higher temperature than the others indicates which one is supporting more weight than its capacity.

The track rollers and the idler wheels can be repaired in some cases, as well as the "track connecting links". The repairing of a track is a specialized service and demands machines which are not usually available in regular repair shops.

If a recovering is being performed, make sure that the correct position for the roller is kept, according to the following:

From the rear idler wheel, the rollers with single tab are the rollers number 2, 4, 6 and 8; the rollers with dual tabs are number 1, 3, 5 and 7.

ASSEMBLY

1. Roller assembly

1.1. First, position the dual roller and then the single roller on the track.

Make sure that the single roller stays between the dual rollers.

Make sure that the roller grease nipple sensor remains on the track outer side.

1.2. Apply Loctite 262 on the bolts.

1.3. Fasten the rollers on the track using bolts, plain washers and nuts. Make sure to torque them in a criss-cross pattern to 300-350 N.m.

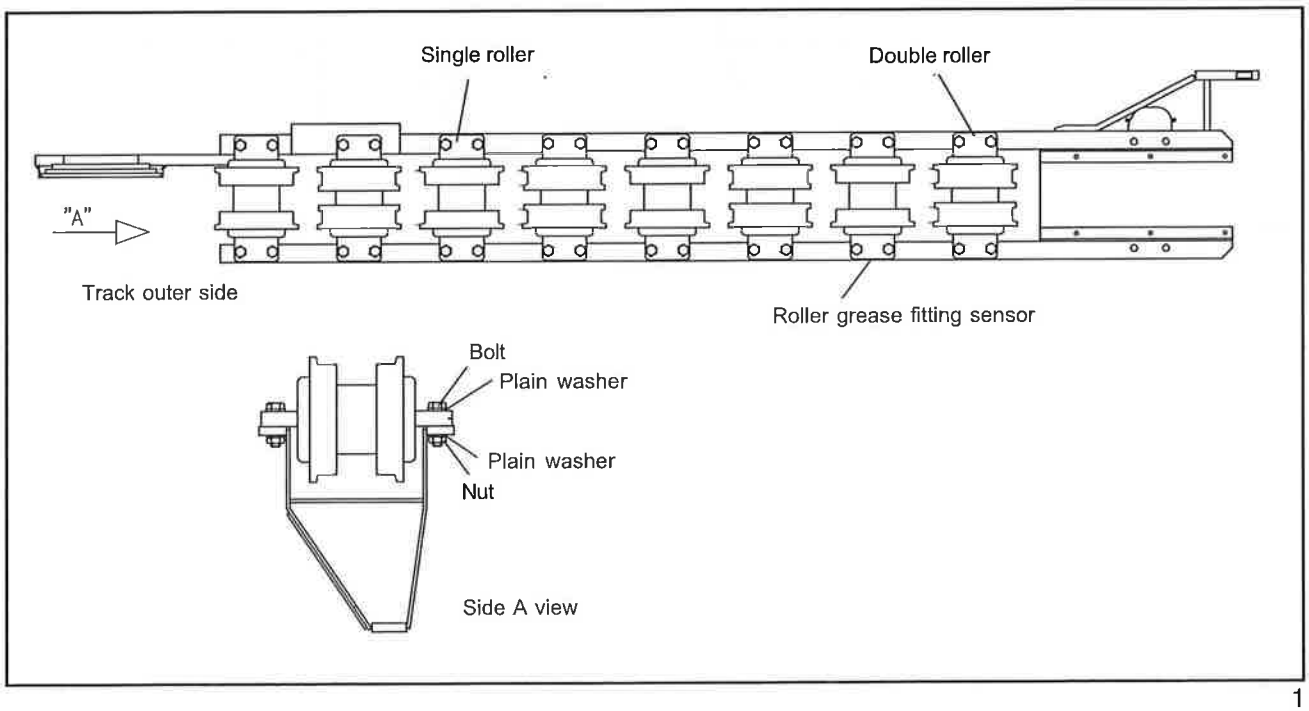

1

2. Side guides assembly

2.1. Position the outer front side guide, left side, on the track, and on the other side of the track, position the inner front side guide, left side. Fasten the guide using bolts, lock washers and nuts.

2.2. Position the outer central guide, left side, on the track, and on the other side of the track, position the inner central guide, left side. Fasten the guide using bolts, lock washers and nuts.

2.3. Position the outer rear side guide, left side, on the track, and on the other side of the track, position the inner rear side guide, left side. Fasten the guide using bolts, lock washers and nuts.

2.4. Fasten the side end of the front side guide using a bolt, lock washer and nut.

2.5. Fasten the central end of the rear side guide using a bolt, lock washer and nut.

2.6. Fasten the guides and torque them to 150-200 N.m.

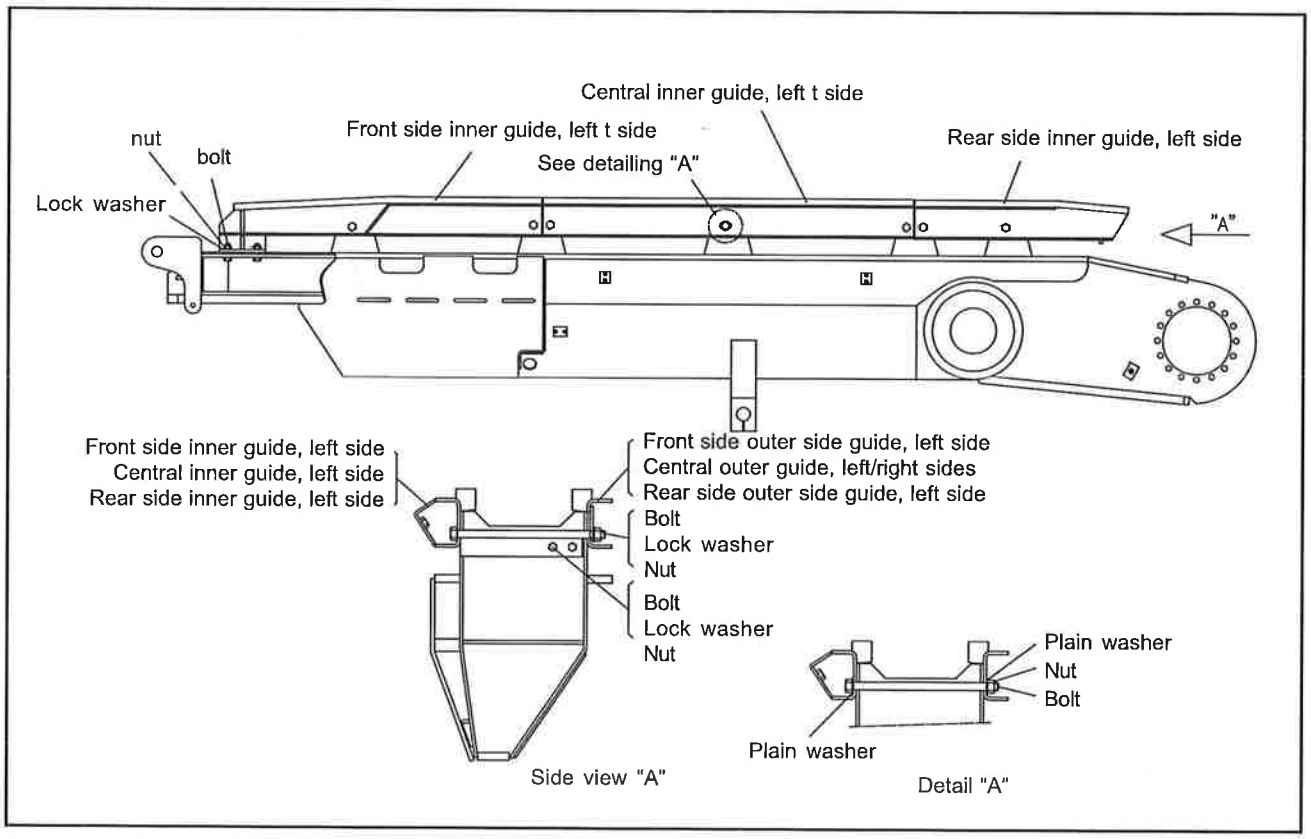

2

3. Deflector assembly

3.1. Position the rear deflector on the track.

3.2. Fasten the rear deflector using bolts, plain washer and lock washers; torque them to 100-150 N.m.

3.3. Position the deflector on the track.

3.4. Fasten the deflector using bolts, plain washer and lock washers; torque them to 100- 150 N.m.

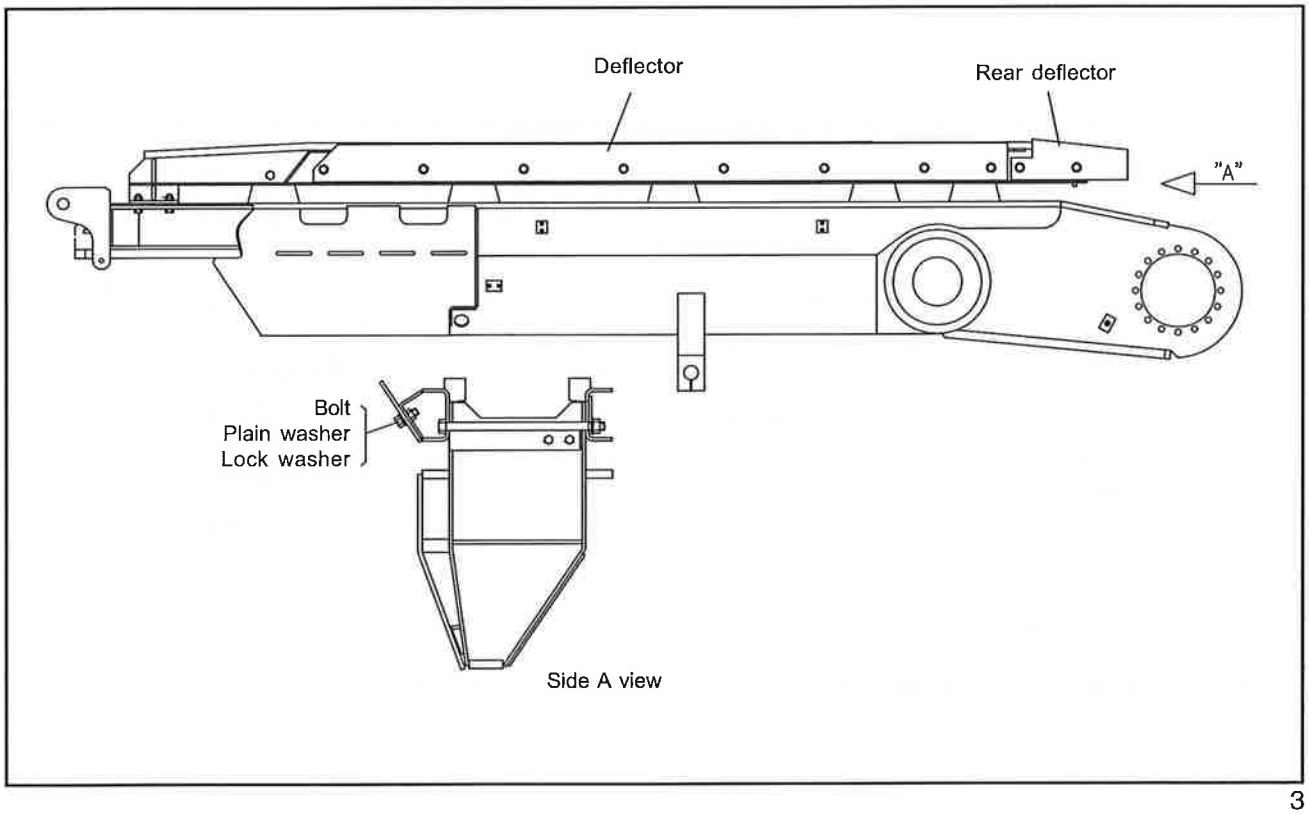

3

4. Wear bar, cover and ball joint assembly

4.1. Position the wear bar on the track guide.

Fasten the wear bar with a bolt and nut.

4.2. Position the cover on the recess in the track.

Fasten the cover using a bolt and a lock washer.

4.3. Using a cloth with thinner, remove all grease and oil from ball joint housing of the track.

4.4. Apply a uniform coating of anti-seize in the ball joint housing.

4.5. Position and centralize the ball joint in the housing.

4.6. Using a long tip pliers, position the snap ring in the ball joint housing.

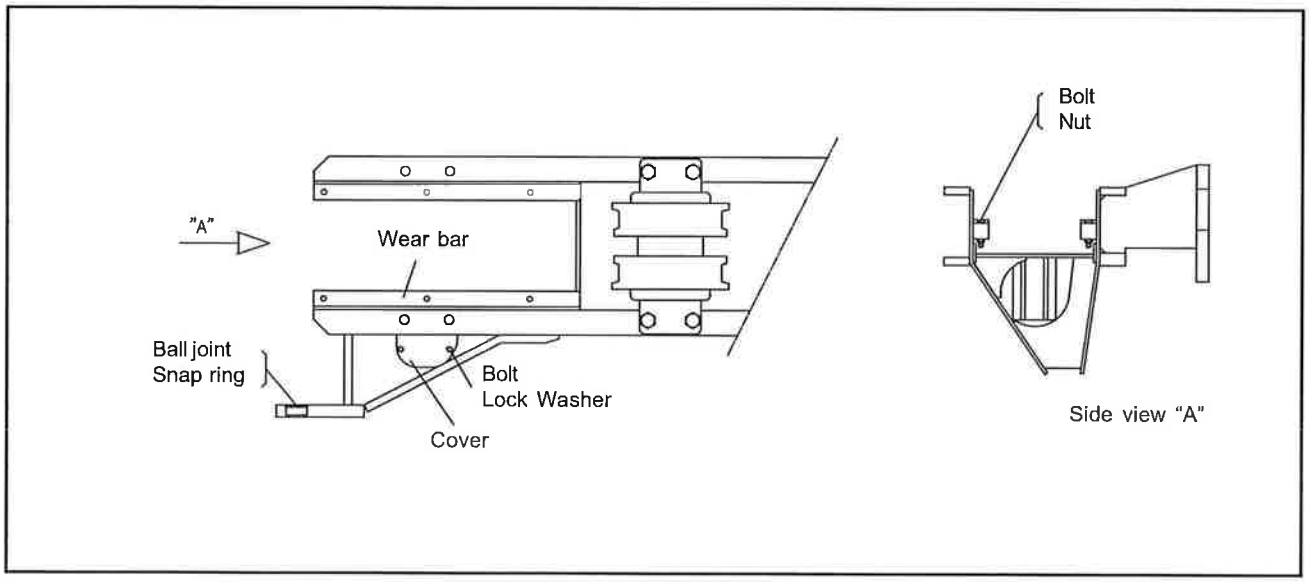

4

5. Reduction assembly

5.1. Lift the reduction and position it on the track housing (fig. 2).).

5.2. Apply Loctite 262 on the bolts.

5.3. Fasten the reduction to the track using bolt and a plain washer; torque it to 300 -350 N.m.

5.4. Manually turn the reduction and position the area where the drain plug is installed on the reduction in the vertical position downwards (see side "A" view).

5.5. Position the plain floorboard on the floor, under the drain plug, a container to collect the oil drained from the reduction.

5.6. Using a 1-1/2" combined wrench, remove the plug from the drain on the reduction.

5.7. Drain all the oil from the reduction.

5.8. Position the drain plug on the reduction, without tightening it.

5.9. Remove the collecting container with the reduction oil from the assembly area.

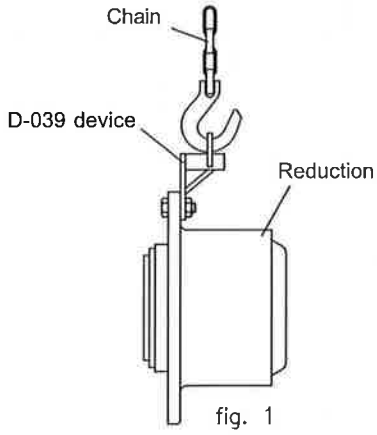

fig. 1

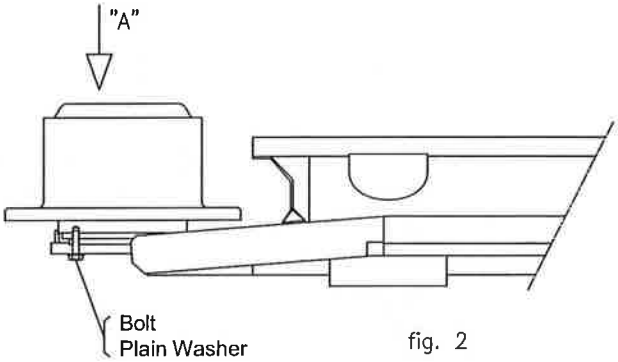

fig. 2

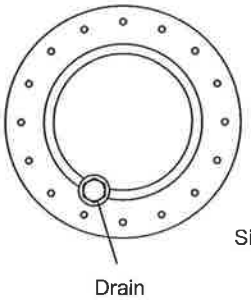

Side "A" view

5

6. Drive wheel assembly

6.1. Apply Loctite 262 on the bolts.

6.2. Fasten the drive wheel to the reduction using a bolt and a nut; torque it to 300 – 350 N.m in a criss-cross pattern.

The holes without counterbores on the drive wheel will not be use on this part of the procedure.

6.3. Torque the bolts to 380-400 N.m.

6.4. Manually remove the drain plug on the reduction.

6.5. Manually turn the reduction and position the drain ± 15° above the reduction central line (see side "A" view). Make sure that the drain nozzle remains free; just the gear teeth must be seen (see side "A" view) in order to make the later oil filling easier.

6.6. Position the drain plug on the reduction, and tighten it manually.

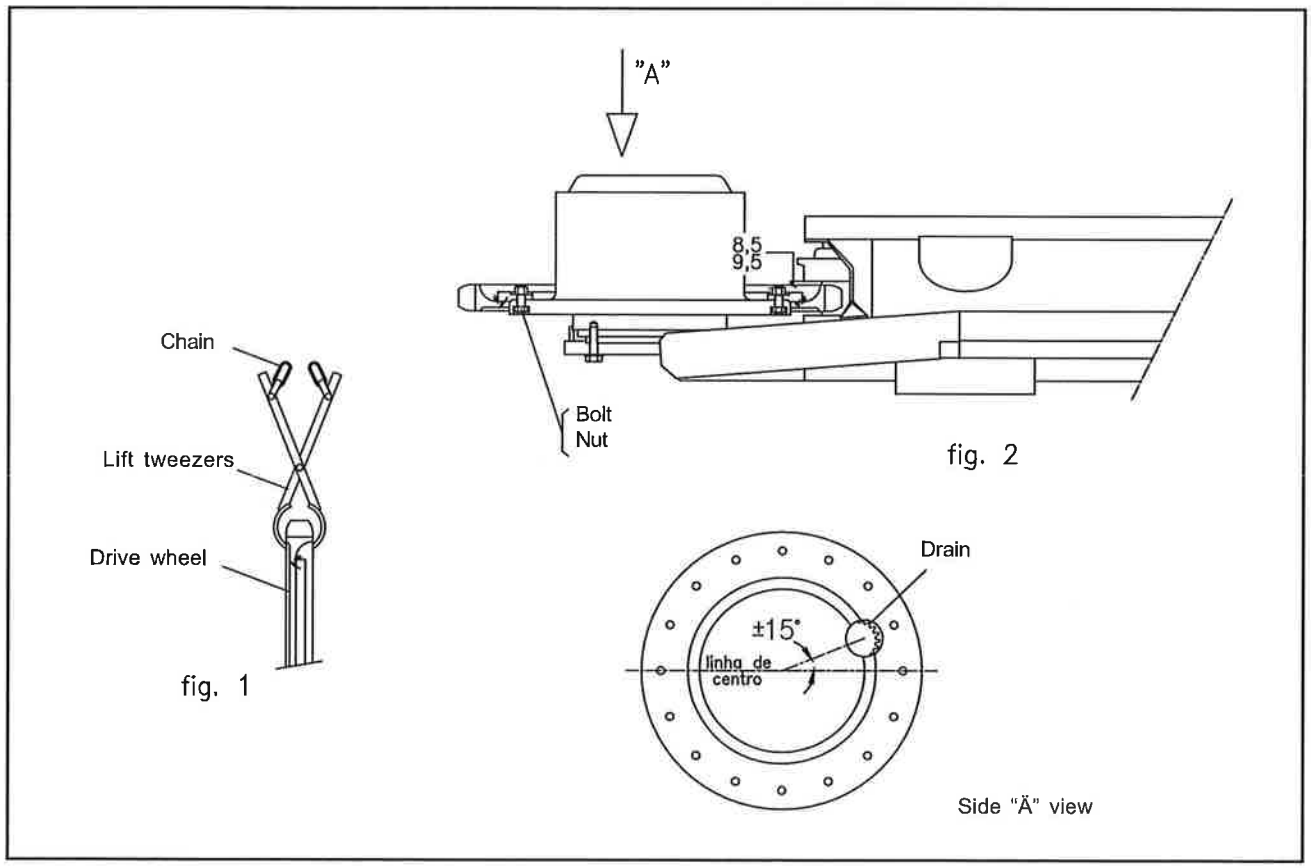

6

7. Assembling the brake hub on the reduction

7.1. Remove the bolts (1).

7.2. Remove the cover (2).

7.3. Using a spatula and a cloth moistened with thinner, remove the rest of Ultra Black from the thrust face on the reduction, at the place where the cover was installed (2).

7.4. Apply a coating of Loctite 262 on the bolt body.

7.5. Apply a continuous coat of Ultra Black 598 ± 5 mm thick on the area between the holes and the housing on the reduction's thrust face (Fig. 2).

7.6. Position the brake hub, centralizing it on the reduction housing (Fig. 3). .

Make sure that the bleeder on the brake hub stays on the vertical position (upwards).

7.7. Fasten the brake hub using a bolt and torque it to 150-180 N.m in a criss-cross pattern.

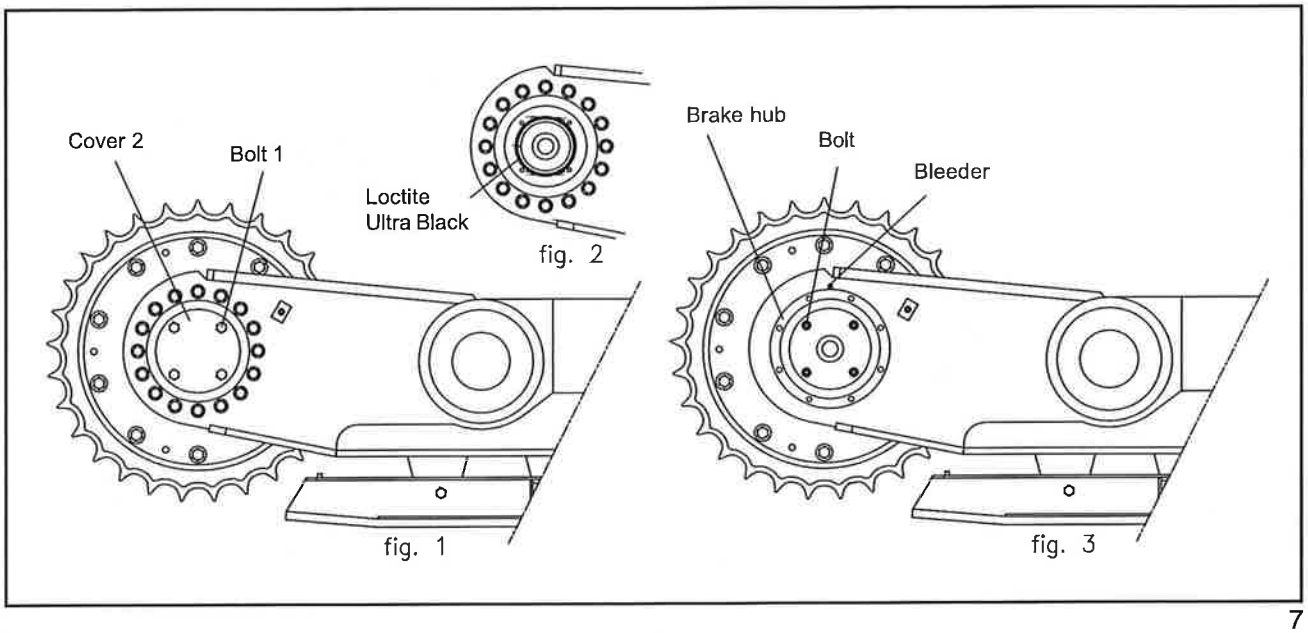

7

8. Transmission motor assembly

8.1. Apply a coating of Loctite 262 on the bolt body.

8.2. Using a clean cloth, wipe off the spills of oil from the transmission motor thrust face.

8.3. Apply a continuous coat of Ultra Black 598, ± 5 mm thick on the area between the holes and the housing on the safety brake thrust face (Fig. 2). .

8.4. Apply a uniform coating of anti-seize on the outer spline of the transmission motor.

8.5. Position the transmission motor, supporting it on the safety brake thrust face and centralizing it by the spline.

8.6. Fasten the transmission motor using bolts. Make sure that the existing port positions on the motor remain on the indicated location. (Fig. 3 and Side "A" view).

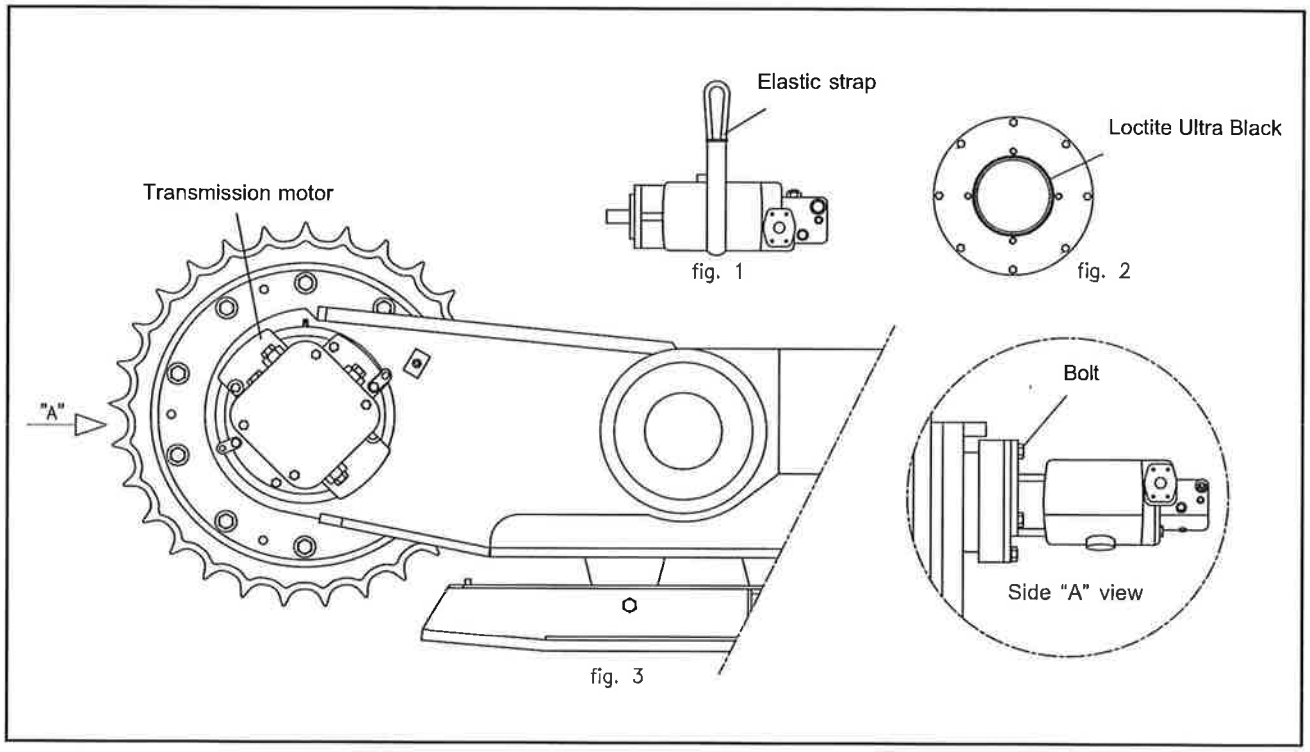

8

9. Cover assembly

9.1. Position the plain floorboard on the floor, under the unprotected hose, a container to collect the oil drained from the hydraulic cylinder.

9.2. Bleed all oil from the hydraulic cylinder.

9.3. Remove the collecting container with the hydraulic cylinder oil from the assembly area.

9.4. Position the unprotected hose on the cover fitting and tighten it manually (Fig. 1). Make sure that the hose swivel fitting is perfectly centralized as related to the "jic" on the cover fitting.

9.5. Fasten the unprotected hose.

9.6. Position the cover on the track side (Fig. 2) and fasten it using bolts and lock washers. .

9.7. Position the washer on the valve (Fig. 3).

Make sure that the washer collar remains facing upward, as related to the valve head (fig. 3).

9.8. Position the valve on the cover assembly (Fig. 2).

9.9. Fasten the valve assembly.

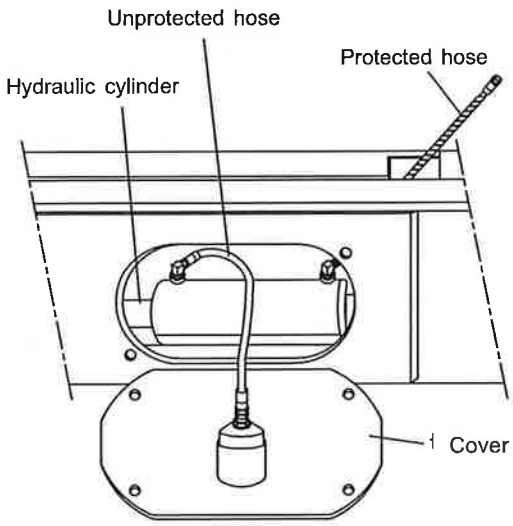

fig. 1

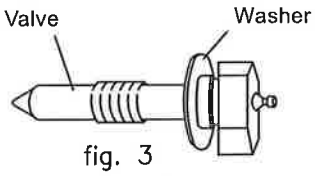

fig. 3

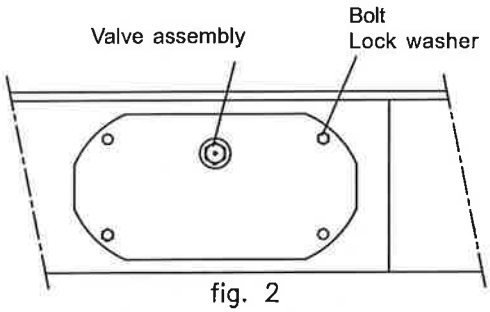

fig. 2

9

10. Idler wheel assembly

10.1. Using a cloth moistened with thinner, remove the grease and oil residues on the the hydraulic cylinder rod end.

10.2. Using a cloth moistened with thinner, remove the grease and oil residues on the arm mounting housing.

10.3. Apply a coating of Loctite 262 on the bolt body.

10.4. Position the arm, fitting it into the hydraulic cylinder rod end, and rest it on the cylinder supporting face.

10.5. Fasten the arm using bolts, plain washers, lock and nut; torque them to 300-350 N.m.

10.6. Torque to 460-480 N.m.

10.7. Position the spring, centralizing it with the support shaft, using a rubber maul; tap on the spring until it touches the support face. Position the assembly on the track.

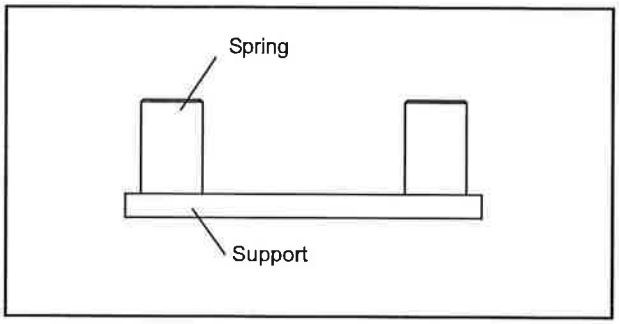

10

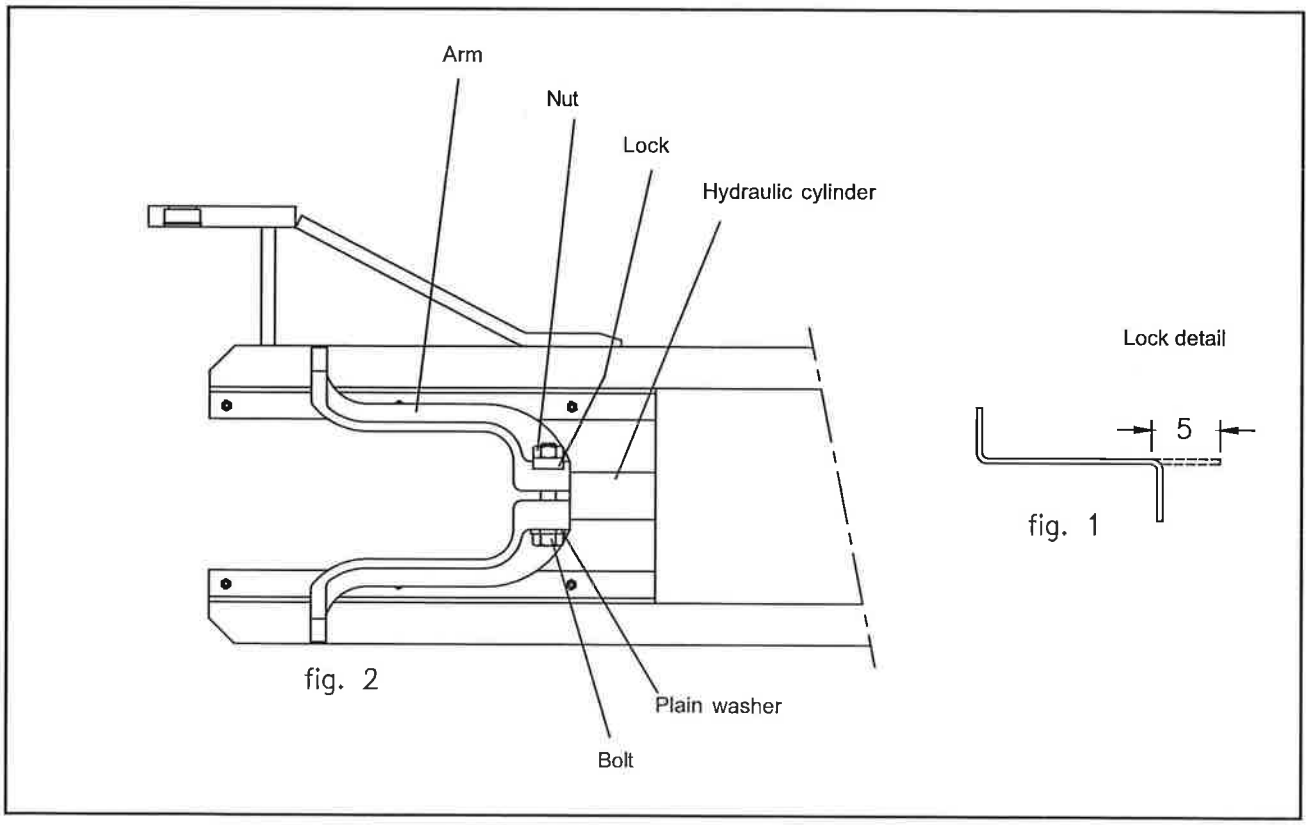

11

10.11. Position the idler wheel over the support face on the track (Fig. 2).

10.12. Position a shim over the support shaft with the spring (1).

10.13. Manually insert the assembly with the spring (1) plus the shim in the idler wheel assembly (Fig. 2).

10.14. Settle the idler wheel with the support and spring assembly (1) plus the shim over the supporting face of the idler wheel on the track (Fig. 2).

10.15. Make sure the assembly with the spring (1) is perfectly set on the supporting face of the drive wheel on the track.

10.16. Remove the bolt, plain washer, guide and spacer.

10.17. Using a cloth moistened with thinner, remove the grease and oil spills from the thrust face on the idler wheel, from the spacer removed on the previous procedure.

10.18. Using a cloth moistened with thinner, remove the rest of grease and oil spill from the idler wheel thrust face, on the place where the arm will be mounted in, and on the arm face, where it will be fastened to the drive wheel (Fig. 3).

10.19. Slide the idler wheel on the track, by its supporting face, until the drive wheel touches the arm face (Fig. 3).

10.20. Apply a coating of Loctite 262 on the bolt body.

10.21. Fasten the idler wheel using bolts, plain washers with a 15/16" combined wrench, manually tightening in a criss-cross pattern.

10.22. Using the torque wrench with a 3/4" fitting, along with a short 15/16" x 3/4" hex socket, torque the bolt to 320-350 N.m in a criss-cross pattern.

10.23. Release the overhead crane and remove the lift tweezers.

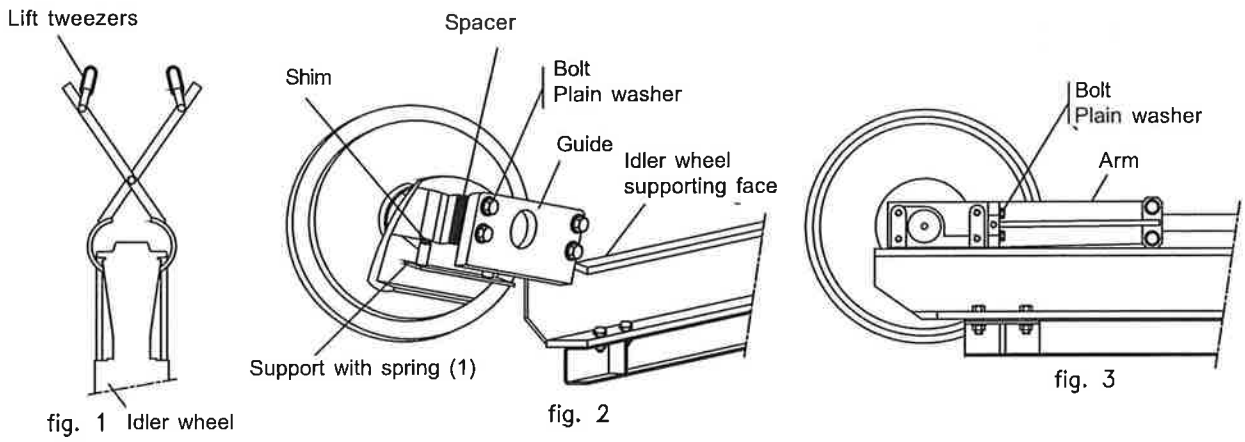

fig. 1 fig. 2 fig. 3

12

10.24. Fasten the support with spring, located on the inner side of the idler wheel housing, using a bolt and a plain washer.

10.25. Using a measuring tape along with an industrial marker, trace and mark in the cylinder shaft 55-60 mm from the idler wheel arm bottom (Fig. 1).

10.26. Apply grease.

Note that the hydraulic cylinder route is opened and, with the amount of grease being applied inside the hydraulic cylinder, it will start to close.

Make sure that the cylinder rod usable length is within 55-60 mm, as previously measured.

10.27. Torque it to 40-50 N.m in a criss-cross pattern.

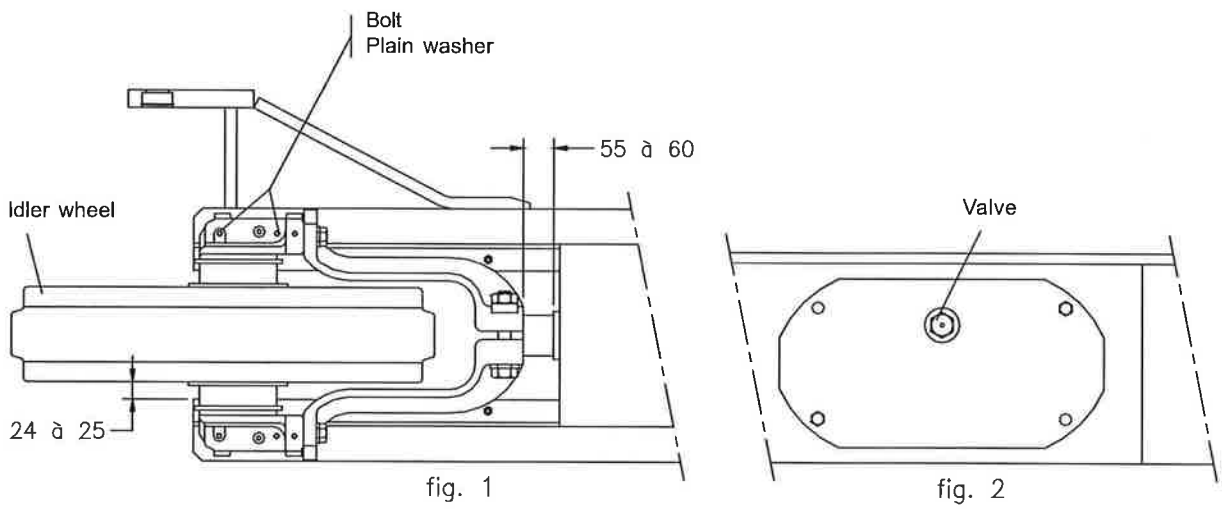

fig. 1 fig. 2

13

10.28. Start assembling by the track inner side.

10.29. Place two spacers (in average) on the idler wheel face in each whole area and then position the chamfered guide by supporting it on the spacers.

10.30. Fasten the chamfered guide using a bolt and a plain washer and torque it to 150-180 N.m.

10.31. Make sure there is a clearance of 1-3 mm between the chamfered guide inner face to the outer face of the idler wheel supporting holder welded to the track.

10.32. If the clearance is not within 1-3 mm, remove the chamfered guide, add one more spacer to it and repeat the two previous steps.

10.33. If the clearance is within 1-3 mm, proceed to the next step.

10.34. Place four spacers (average) on the idler wheel face in each whole area and then position the guide without chamfer, by supporting it on the spacers.

10.35. Fasten the guide without chamfer, using a bolt and a plain washer and torque it to 150-180 N.m.

10.36. Make sure there is a 1-3 mm clearance between the inner face of the guide without chamfer to the outer face of the idler wheel supporting holder welded to the track.

10.37. If the clearance is not within 1-3 mm, remove the guide without chamfer, add one more spacer to it and repeat the two previous steps.

10.38. If the clearance is within 1-3 mm, proceed to the next step.

10.39. Place the step, supporting it on thrust face of the guide without chamfer and fasten it using bolts and plain washers; torque it to 150-180 N.m.

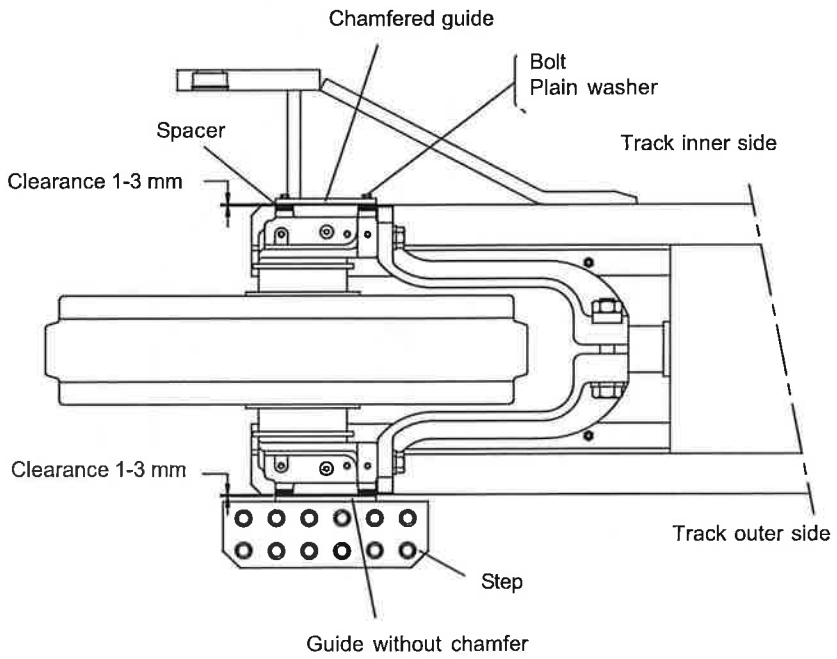

14

11. Guide roller assembly

11.1. Using a cloth with thinner, remove all grease and oil from hinge housing, welded to the track and to the roller shaft.

11.2. Place a wedge on the hinge housing hole, tap on the wedge to force the hinge housing to open.

11.3. Apply a uniform coating of anti-seize on the hinge housing and on the guide roller.

11.4. Position the guide roller shaft in the hinge housing.

Make sure that the lock pins on the guide roller fit in the guiding holes on the hinge.

11.5. Remove the wedge from the hole on the hinge housing.

11.6. Fasten the guide roller using bolt and lock washer, manually tightening it.

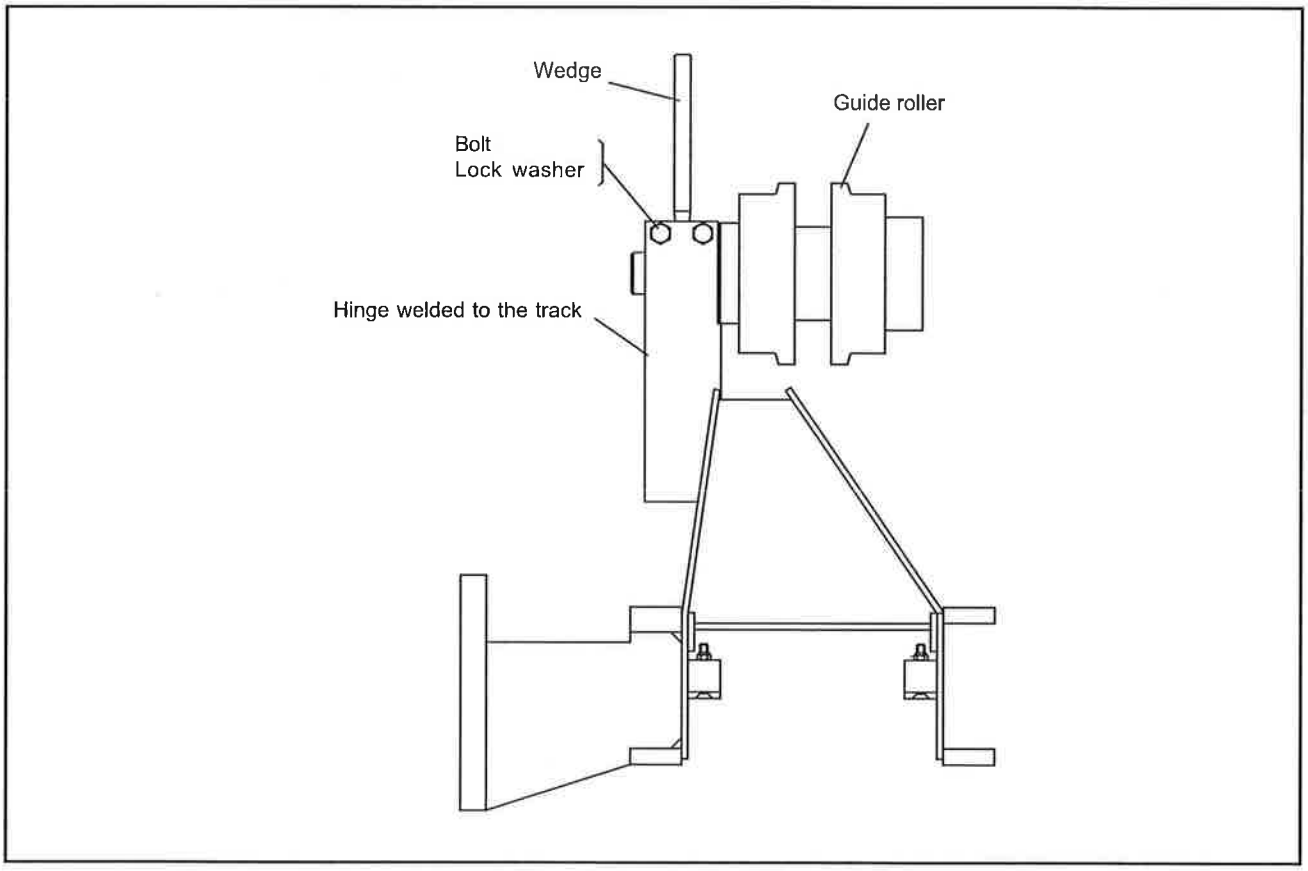

15

12. Drive wheel, idler wheel and guide roller assembly

12.1. Using a string, centralize one end at the drive wheel center and stretch the other end of the string to the idler gear and centralize it.

12.2. With the help of a measuring tape, make sure that the string remains centralized on the drive wheel and on the idler wheel.

12.3. Using a string once again, make sure that the string is centralized on the guide roller.

12.4. If the string is not centralized on the guide roller, centralize it, using the string as reference.

12.5. If the string is centralized on the guide roller, proceed to the next step.

12.6. Using the string as a reference, make sure that the drive wheel, the idler wheel and the guide roller are centralized among them.

12.7. Make sure that the maximum misalignment is within 2 mm.

12.8. Fasten the guide roller using bolt and lock washer, applying the torque of 100-120 N.m.

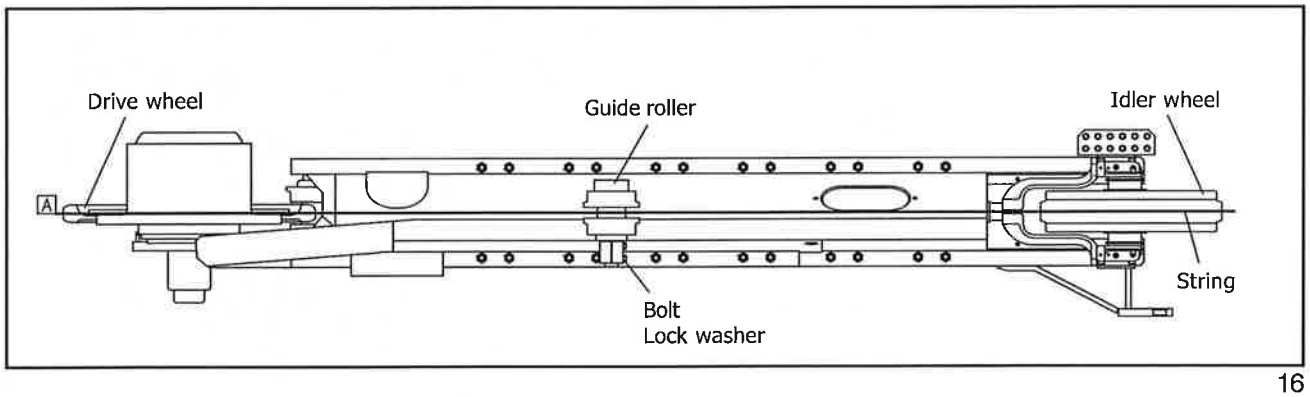

16

13. Protection assembly

13.1. Position the left side protection on the track and centralize it on the reductionreduction box diameter.

13.2. Fasten the left side protection using bolts, plain washer and lock washers; torque them to 150-180 N.m.

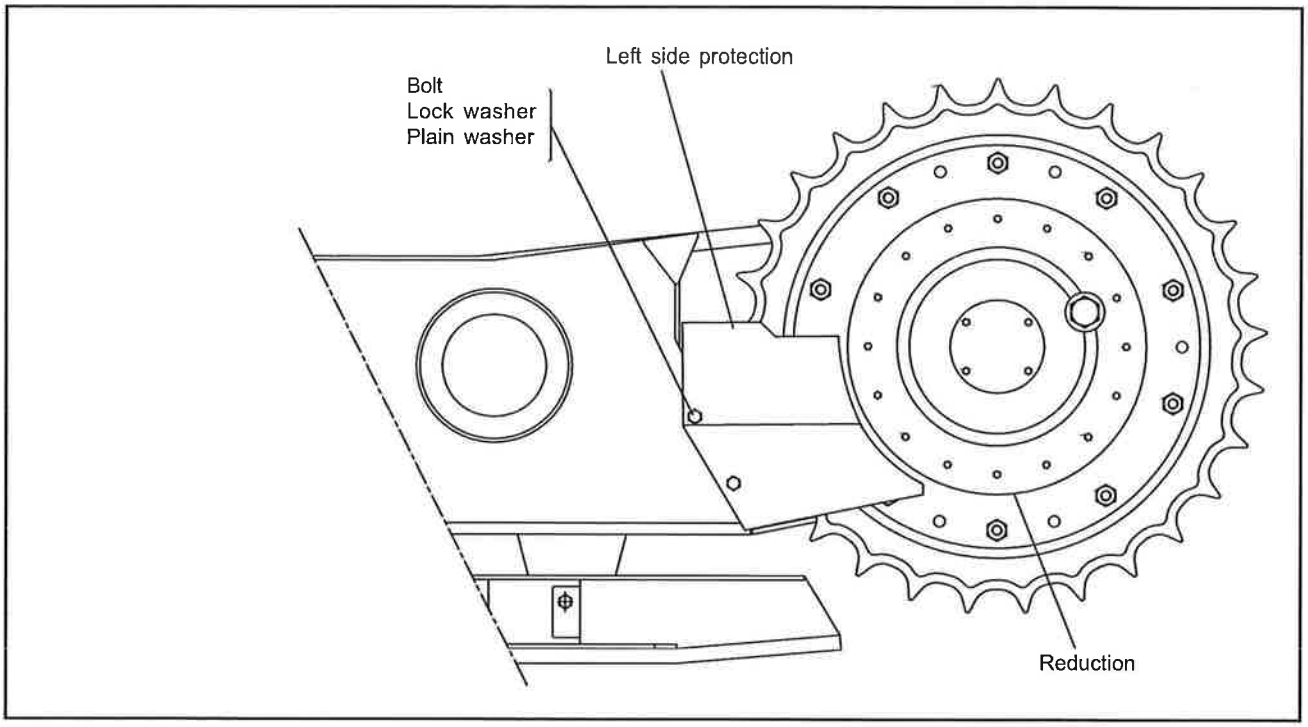

17

14. Protection assembly

14.1. Make sure that the supporting face of the chain (Fig. 1) and the area of the shoes holes (Fig. 2), the supporting face on the area of the shoes holes (see "A" side view), do not present oxidation nor paint; they shall only present a thin coat of protective oil.

14.2. If the indicated faces present any oxidation or paint, remove them.

14.3. Place the shoe on the chain (Fig. 3)

14.4. Fasten the shoe using a bolt and a nut; torque it to 300 – 350 N.m in a criss-cross pattern.

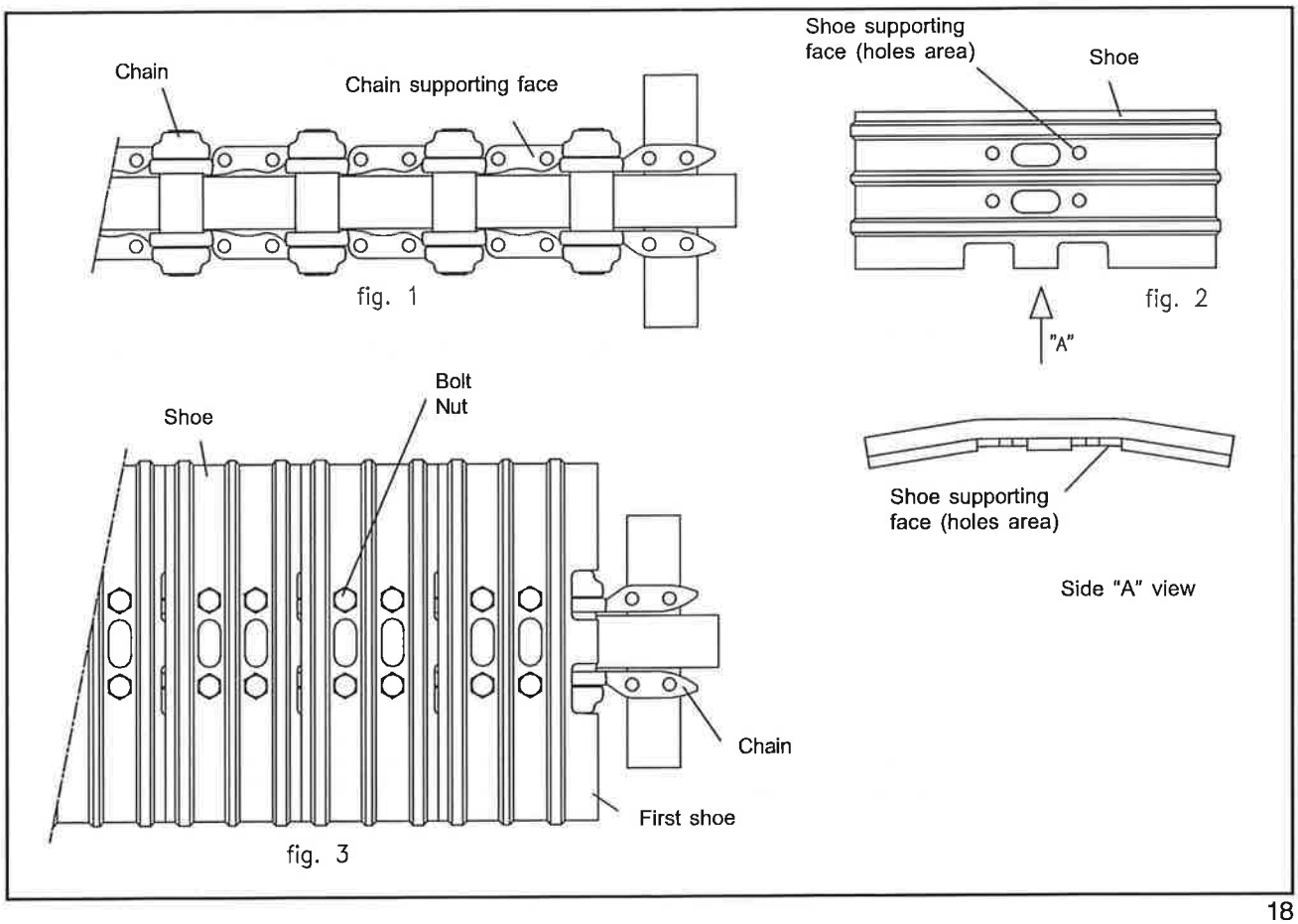

18

14.5. Using the guide tube, position it on the chain central side, trespassing it to the other side through the opening on the chain (Fig.1).

14.6. Using the chain, turn it two laps in both end of the guide tube.

14.7. Using the guide tube, position it at the beginning end of the chain, trespassing it to the other side through the opening on the chain and start to turn it manually with the help of the guide tube, step-by-step, supporting the chain shoes on the plain floorboard (Fig. 2).

Make sure that the chain remains stretched over the floor plain floorboard.

NOTE: *Take care to not hurt yourself, when turning the chain.*

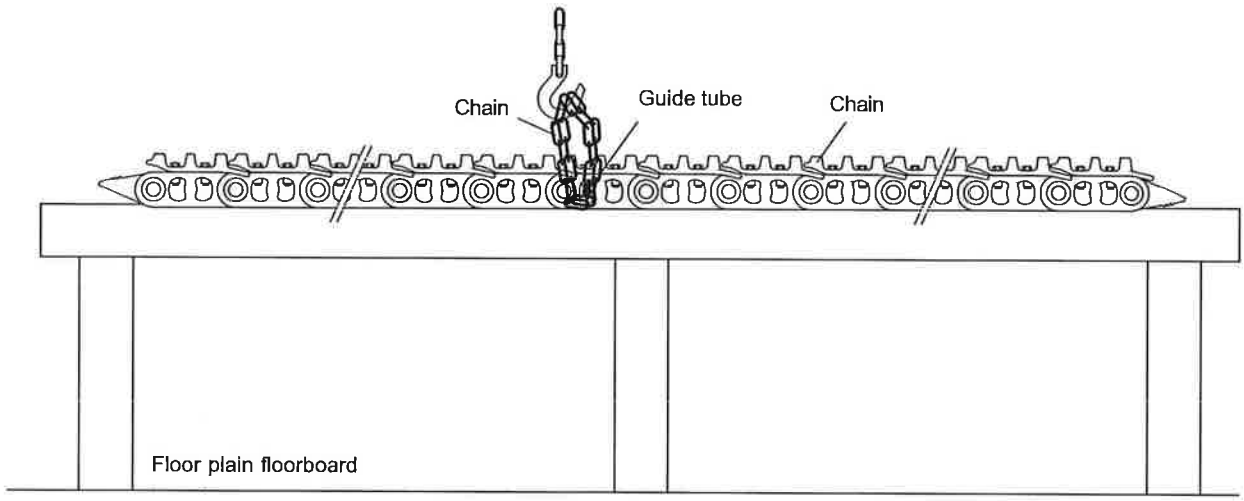

fig. 1

fig. 2

15.Assembling the chain on the track

15.1. Using the guide tube, position it on the first shoe of the chain, trespassing it to the other side through the opening on the chain (Fig. 1).

15.2. Using wood boards, position them on the idler wheel, guide roller and drive wheel (Fig. 2).

15.3. Lift the first end of the chain, with the chain fastened on the guide tube, and position it on the idler wheel and the wood board (Fig. 2).

15.4. Using the smaller supporting jacket, position it on the floor, locking the link of the chain (Fig. 2).

15.5. Using the guide tube, position it on the last shoe of the chain, trespassing it to the other side through the opening on the chain.

15.6. Using the chain, turn it two laps in both ends of the guide tube.

15.7. Lift the last end of the chain, with the chain fastened on the guide tube, and position it on the drive wheel and, guide roller and the wood board (Fig.

15.8. Position and fit the chain splices, one over the other, and position the splice shoe over the chain splice.

15.9. Fasten the splice shoe using a bolt and a nut; torque it to 300 – 350 N.m in a criss-cross pattern.

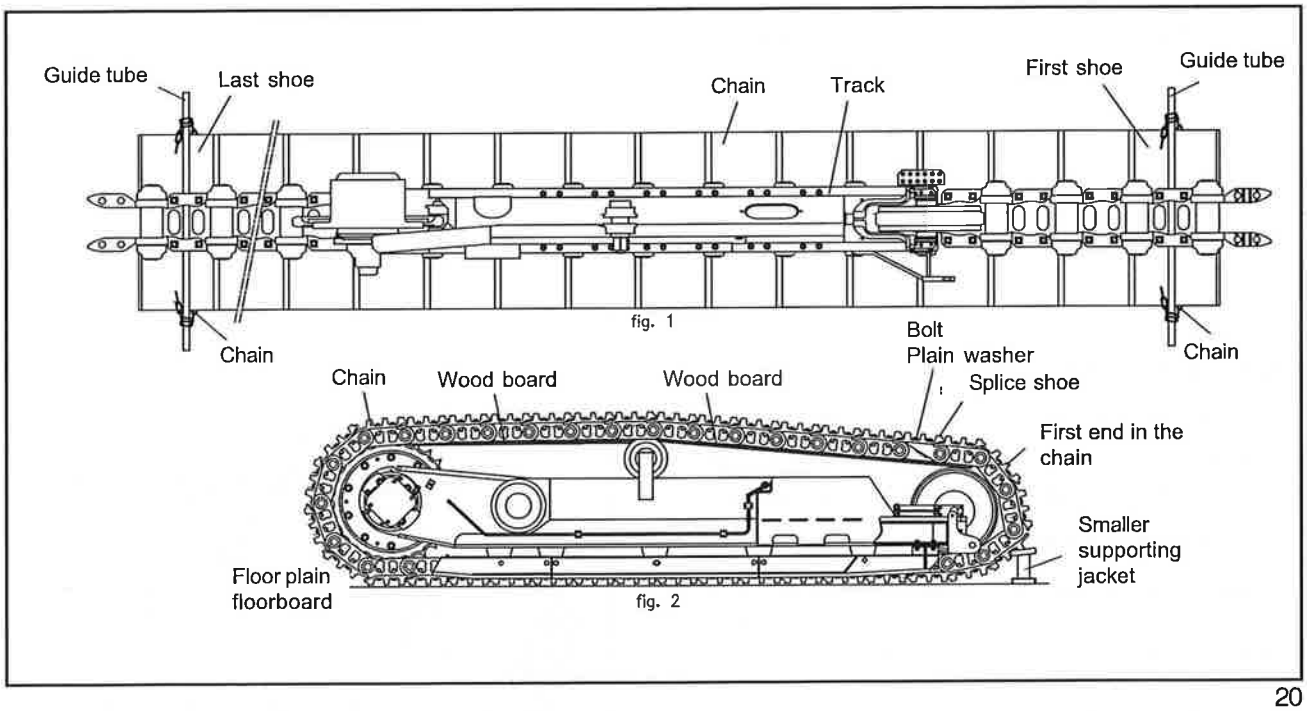

fig. 1

fig. 2

20

Removing the Chain from the Track

To remove the chain from the track, remove the bolts from the master splice. Then, the chain can be separated.

NOTE: *The shoe on the splice link shows a different drilling pattern as compared to a standard shoe.*

Assembling the Chain in the Track

1. Install the bolts on the shoes and torque them to 165 ± 5 N.m, plus 1/2 turn.
2. Re-adjust the track chain.

Adjusting the Track Pivot Pin

NOTE: *Slew elevator to rear of harvester.*

1. Lower the basecutter to the ground and support it with an appropriate stand under the chassis rear side.
2. Lift the basecutter until the rear side of track is well above ground level.
3. Place blocks under the front side of the main chassis and turn the motor off.
4. Move the basecutter control to release any pressure in the accumulator circuit and invert the oil supplying lines of for the cylinder, aiming to direct the oil flow to its lower input (once the control is of single action); then, lift the track.
5. Hold a long lever on the track front side to check the track for any side play.
6. Remove the cover from the pivot pin and tighten the adjusting nut until there is no side play.
7. Re-install the covers, lower the track and return the hoses to their original position; remove the supporting blocks.

Adjusting the Track Chain

Tools: 7/8" socket, 1/2" "T" driver and grease gun.

NOTE: *Before starting the chain tension, the harvester must be on a leveled ground and driving to the forward.*

1. Remove the adjusting grease nipple from the track.
2. Turn the motor on and operate the height control lever of any cylinder until it reaches its final stroke; keep the lever on this position for a few seconds, so that the track adjusting cylinder will extend and stretch the chain.
3. After tensioning the chain, mark the track chassis 10 mm behind the rear side of the front idler wheel bearing assembly and tighten the tension adjusting grease nipple.
4. Connect a grease gun on the grease nipple and pump the grease until the rear side of the driven wheel bearing assembly moves backwards and reaches the mark positioned on the track chassis, which will release the chain until its correct adjustment.

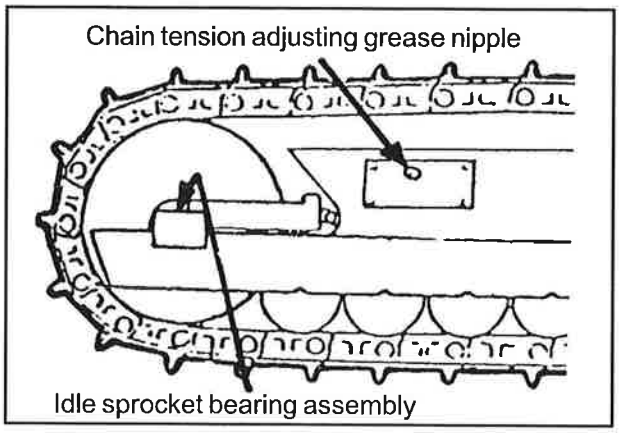

21

Rollers and Idler Wheels Lubrication

The track and the idler wheels rollers are filled with 3-series engine oil, to which an red additive was add, only for identification purposes, in case of leakage.

A visual inspection must be periodically performed by the operator to detect any signal of leakage. As the rollers have a "limited life span", usually it is not necessary to complete the oil level until it is necessary to replace the housings or in case of evident leakage.

For rollers equipped with rubber caps and roll pins, it is necessary to tap the pin to remove the cap. This will destroy the cap and the pin; after completing the repairs; these parts must be replaced and the oil level must be filled.

For older rollers, with removable stainless sticks, you can check and complete the oil level, if needed. The procedure is as described bellow:

1. Place the harvester on a leveled surface.
2. Remove the plug from the shaft and screw in a nozzle P/N 5M2080.
3. Install an application gun to the adapter and fill with oil until it leaks by the nozzle 5M2080 side.
4. This indicates correct level; quickly remove nozzle and re-install the plug.

In case there is not a nozzle P/N 5M2080 available, an alternative level is position the harvester on a angle of approximately 20°; then, the oil can be filled with a can or gun, after waiting a period for the oil to leak by the shaft or on the bearing areas.

NOTE: *If the oil drained on both sides on the nozzle is dirty or contaminated with water, keep pumping until it comes out completely clean.*

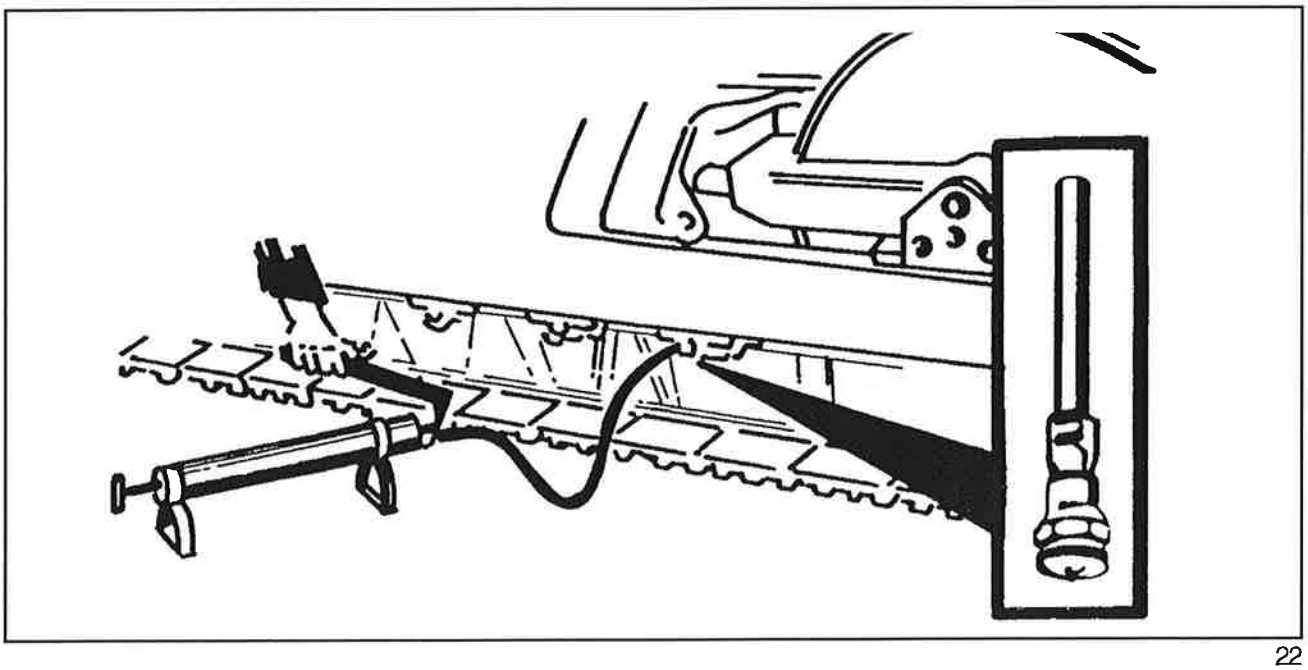

22

Bolts Holes Projected Outwards

Cause: Inappropriate bolts torque.

Effects: Loose shoes

Remedy: Tighten the shoes to the correct torque, stretch the bolts after the first hundred hours.

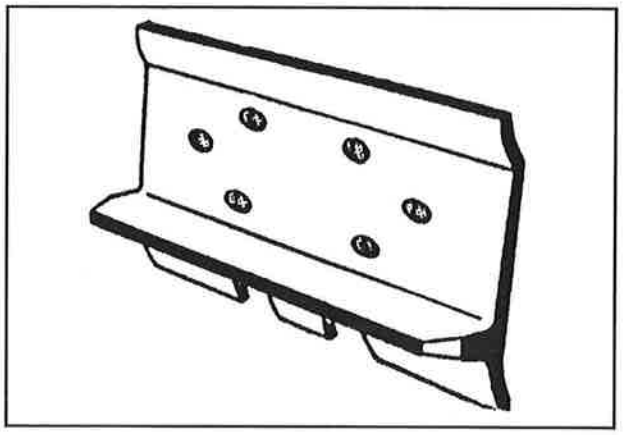

23

Pins and Bushings

Pin and bushing wear measurement should take place on the top half of the track, rather than on the lower side.

Before measuring it, eliminate the play on the track upper side, by placing an old pin or a rigid component on the wheel tooth and slightly backing up the harvester.

The measuring cannotcannot be performed nearby four sections from the king pin, which can be identified by marking its top.

With a steel rule, measure from the side of each pin across four links to the same side of the fifth pin.

Compare this reading with the wear per cent (%) on the table, in order to determine the inner wear in the pins and bushings.

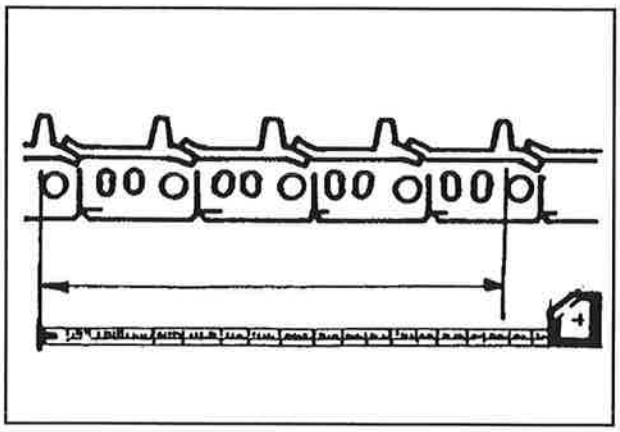

24

When to turn the Pins and Bushings

The best way is to turn the pins and bushings before the track shows an excessive "slack".

Sprocket Wear

Take into consideration turning the sprocket if the harvester shows an excessive play in one side of the wheel tooth, either on the forward direction side or on the backward direction (reverse) side.

If you plan to re-use the sprocket, the pins and bushings must be turned or replaced, when the wear line reaches 6 mm from the sprocket tooth top.

If this procedure is not performed, the teeth tip will become thinner, which will prevent the re-use of the sprocket with other pins and bushings assemblies.

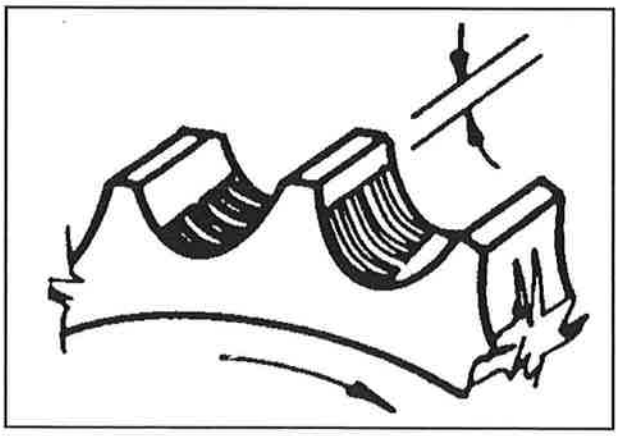

25

When Replacing the Sprocket

Replace the sprocket when the teeth tips reach the point indicated on the figure or if they are worn to the point where the bushings can fall out the sprocket before reaching its service limits and the wear on the bushings increase.

At this point, the sprocket pitch will probably be too reduced to allow a correct matching of the pins and bushings pitch.

The wear showed on Figure 3, 4 and 5 are caused by dirt on the sprocket teeth or around the bushings, which temporally increases the sprocket pitch.

Usually, this situation only occurs when the sprocket, pins and bushings are new.

The problem is minimized after some inner wear, because the sprocket pitch would have suffered a very small variance, so there is no need to replace the sprocket.

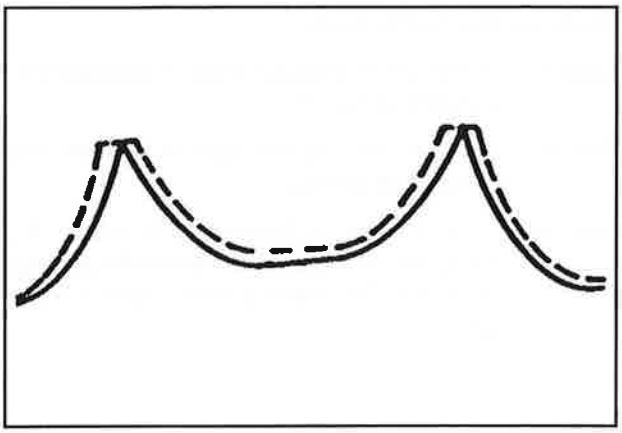

26

Forward Direction Side

Cause: Normal operation on forward direction.

Effects: Causes wear on the bushing outer diameter

Remedy: Turn the pins and replace the sprocket installed on the opposite side in the harvester, if there is not a large wear on the tooth in the opposite side.

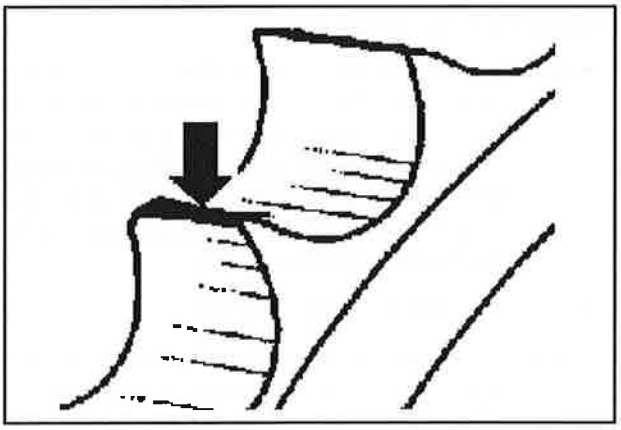

27

Backward Direction Side

Cause: Normal operation on backwards direction (reverse).

Effects: Causes wear on the bushing outer diameter

Remedy: Turn the pins and bushings, and replace the sprocket.

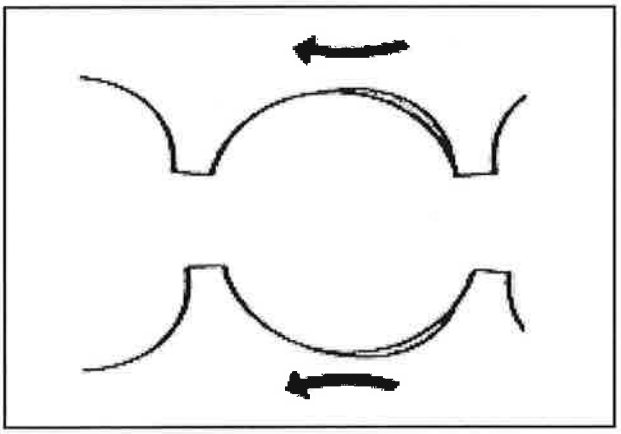

28

Wear on the Teeth Ramp

Cause: Worn pins and bushings show a larger pitch than the sprocket.

Effects: Reduced service life cycle for the sprocket, pins and bushings.

Remedy: Turn the pins and bushings to restore the track pitch and replace the wheel rim; change the wheel if one side is more worn than the other.

Wear on the Teeth Root

Cause: Bushing sliding through the teeth roots on the sprocket.

Effects: Reduction on the sprocket pitch and increase on the bushing wear.

Remedy: Replace the sprocket rim.

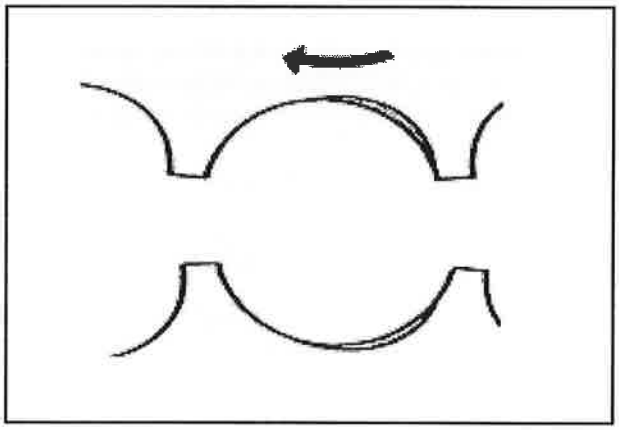

29

Rotary Wear (Support Wear)

Cause: The bushing rotates on the sprocket teeth on the sprocket top - the wear major portion occurs on the reverse direction, when the power is supported by the upper wheel. This wear is more severe when operating the machine backwards at high speeds or backward with heavy loads.

Effects: Fast wear on the bushings.

Remedy: Operate the harvester at a lower speed backwards; if the loads on the backward direction are consistently higher than on the forward direction, alternate the sprockets, if the wear on the forward direction is not too large.

Wear on the Tooth Tip on the Backward Direction Side

Cause: The dirt accumulated on the sprocket or around the bushings forces the bushings upward, on the top side in backward direction, since it is taken to the forward direction.

Effects: Temporally increase the sprocket pitch; reduces the service life cycle for the sprocket, if the harvester is operated in this condition for long periods of time. Usually, this situation only occurs when the sprocket, pins and bushings are new. The problem is minimized after an inner wear in the bushing.

Remedy: There is no need to worry, unless the problem is too severe. The problem can also be minimized if the sprocket, bushings and pins are never replaced at the same time.

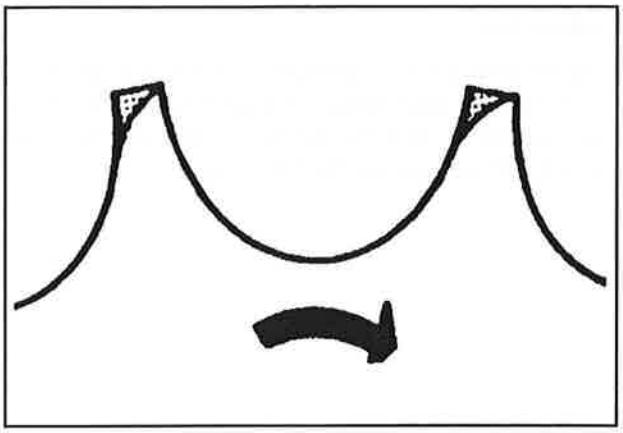

30

Side Wear

Cause: Knocking links, due to lateral operation in slopes; track misalignment or with excessive slack.

Effects: The links recovering is doubtful.

Remedy: Guide protection in the track and re-alignment of the rollers chassis.

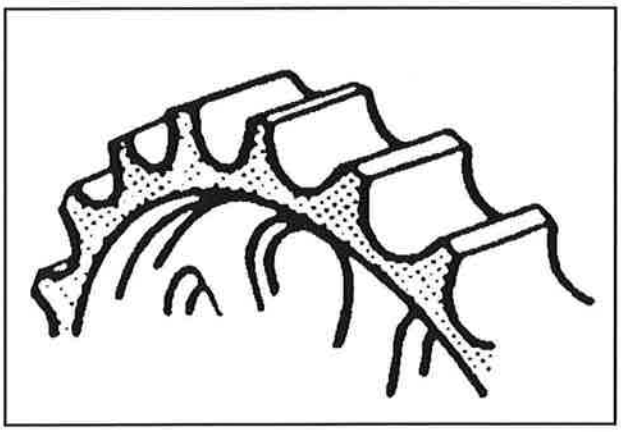

31

Notched Tips

Cause: Links rubbing the track rear rollers, due to lateral operation in slopes; track misaligned or with excessive play.

Effects: The links recovery is doubtful and the sprocket life service cycle is smaller.

Remedy: Track guide protection, re-alignment of the rollers chassis and sprocket.

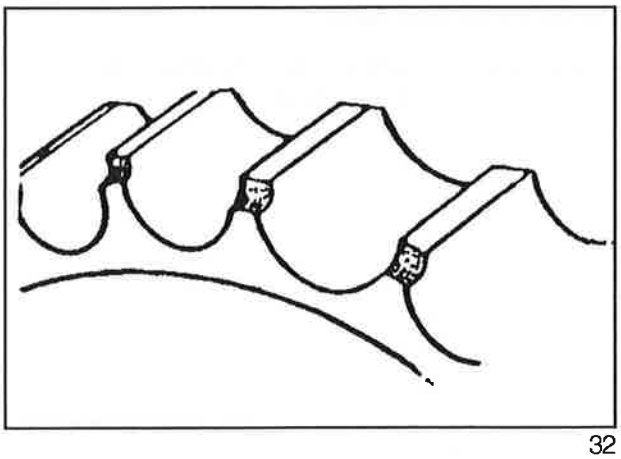

32

Links Wear

The links wear is caused by the contact between the roller with the idler wheel. The contact with the roller causes the "A" and "C" recesses. The contact with the idler wheel causes the "B" recess.

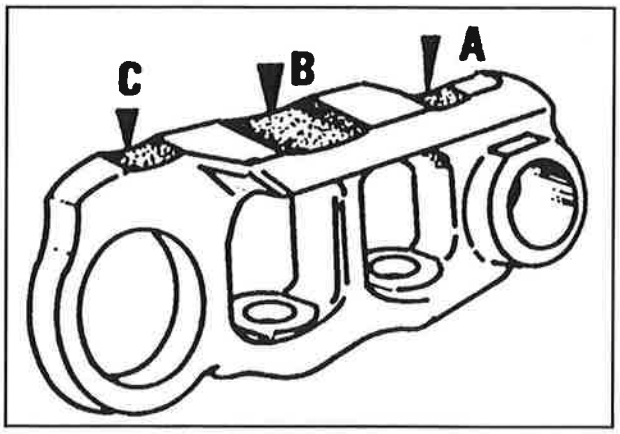

33

Link Seat Wear

With the excessive wear on the rod, the link cannot be able to hold the pins. Turning the pins and bushing is not practical.

Check the operational play between the roller flange and the pin seat.

With the wear on the links and roller threads, this play is reduced and, without the appropriate maintenance, there will be a contact between the roller flange and rod.

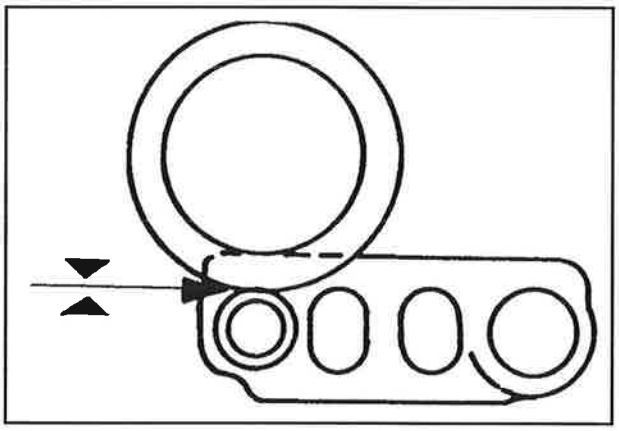

34

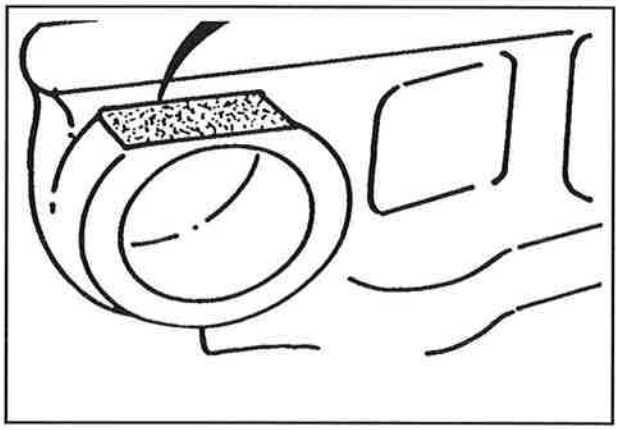

35

Guide Protection Wear

This kind of wear on the link is a result from the contact with the guide protection blade.

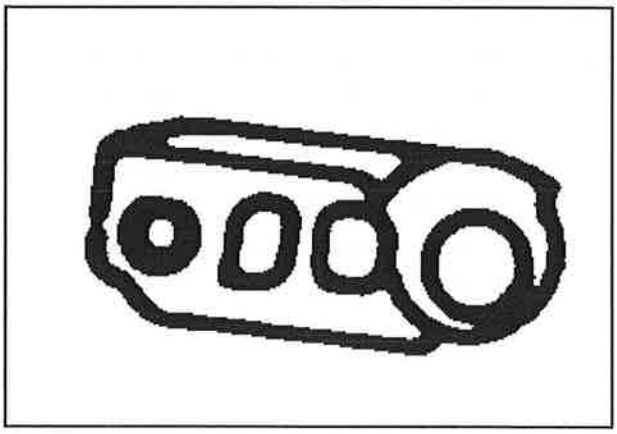

36

Lower Rollers Assembly

The lower rollers assembly is composed of:

a. Track rollers.

b. Rollers support.

c. Idler wheel.

The wear occurs mainly in two places:

1. The contact with the links rail causes the wear on the roller threads, as shown in Figure A.
2. Operations in slopes cause the roller flange wear, as shown in Figure B.

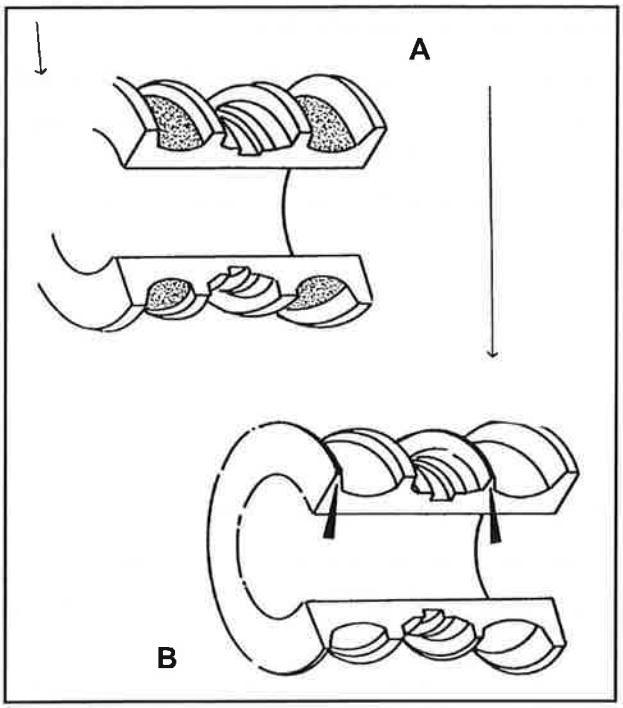

37

ROLLERS WEAR DIAGNOSIS

Wear on the Threads

Cause: Normal wear.

Effects: The roller flange touches the links pins seat.

Remedy: Repair before the flange touches the pin seat.

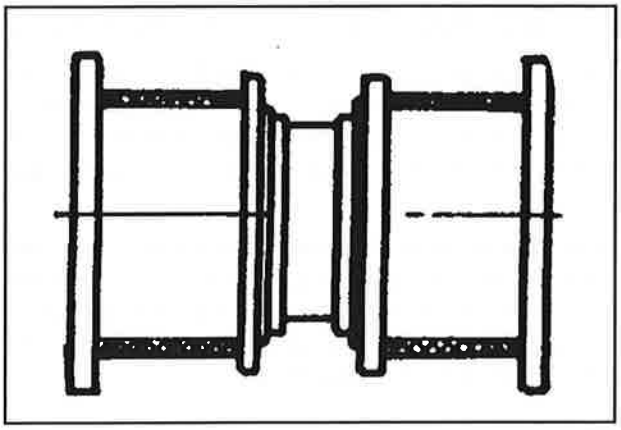

38

Wear on the Flanges

Cause: Operations in slopes; misalignment, excessive slack on the track or flange touching the pin seat.

Effects: Reduces the service life cycle for the roller; the roller recovery is doubtful.

Remedy: Install or keep the guide protection on the track; re-align the roller support; adjust the track to reduce the play; repair the rollers.

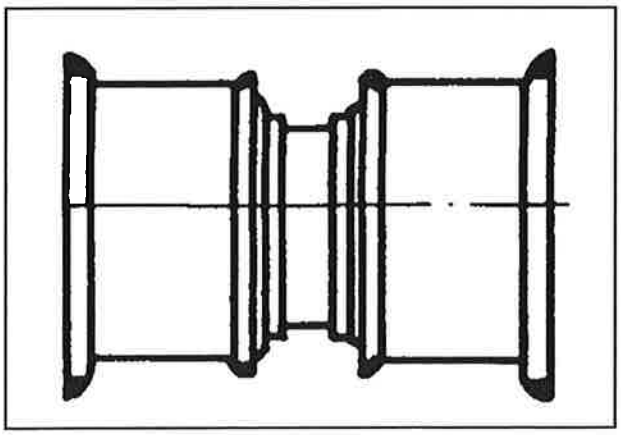

39

Worn Threads Out of Center

Cause: Roller misalignment; operations on sloped.

Effects: Reduced service life cycle; the roller support repair is doubtful.

Remedy: Re-align the roller support; repair it.

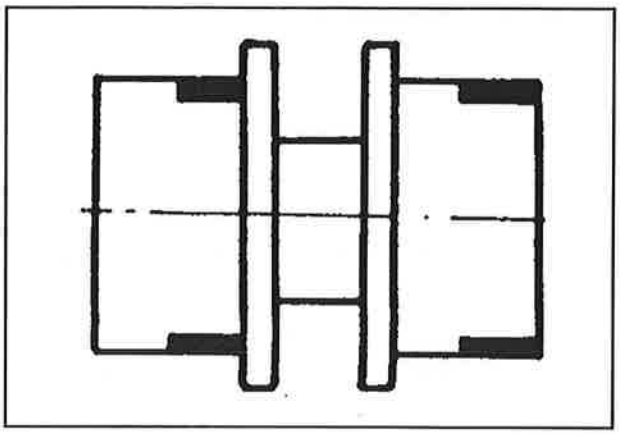

40

How to Measure the Roller Wear

Using a large gauge, measure the roller race diameter.

Place the gauge against a steel ruler in order to read the diameter.

To determine the roller assembly wear, compare the reading from the worn part with the figures on the wear rate (%) table.

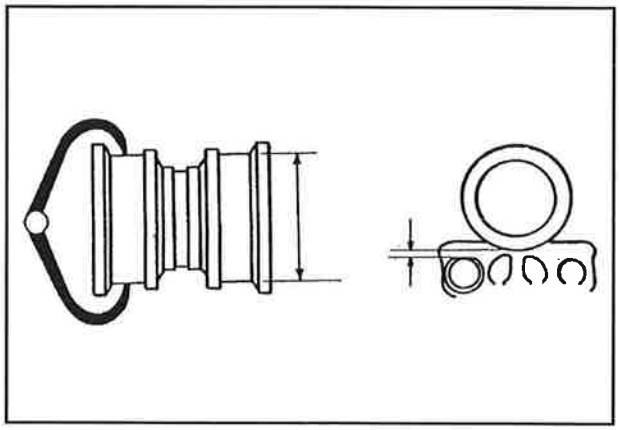

41

Clearance between the Roller and the Pin Seat

If the protection guide is obstructing the measurement between the pin seat and the roller flange, you can obtain the value by subtracting the wear on the link and added to the roller wear, for the clearance, for new parts.

For example, if the clearance is 17.2 mm (0.69"), the wear on the roller radius is 3.8 mm (0.15") and the wear on the link is 4.6 mm (0.18"); so, the clearance on the pin seat is 17.5 mm (0.69"): 3.80 mm (0.15") + 4.6 mm (0.18") + 9.1 mm (0.36").

IDLER WHEEL

Idler Wheel Flange Wear Inspection

Check the flanges on the idler wheel for excessive wear.

The wear in one single side indicates that the idler wheel is out of center. Correct it using adjusting shimS.

An excessive wear on both sides indicates that the wear blade or the shim are not assembled.

The problem can be corrected by adding shims, or it may be necessary to install new blades.

Other possible cause for this kind of wear: the roller support can be misaligned or in continuous operation on slopes.

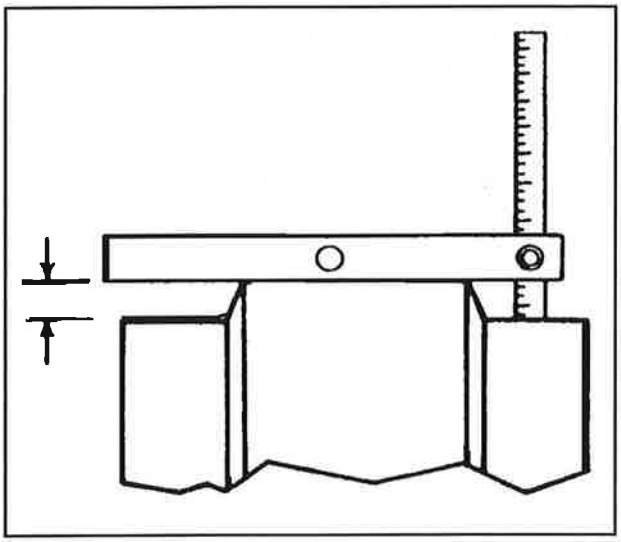

1

How to Measure the Wear on the Idler Wheel Race

The wear on the idler wheel can be detected by comparing the central flange height measured to the new height shown in the wear table.

Place the depth gauge on the central flange larger base and press in the measuring scale to the threads surface.

Compare this reading with the figures on the per cent wear (%) table, in order to obtain the idler wheel assembly wear.

CAUTION: *If the central flange is worn, an accurate reading cannot be obtained.*

Wear on the Flange Top

Cause: The dirt accumulated around the idler wheel causes an abrasive action at the flange top in the sprocket.

Remedy: Usually, the wear on the flange top is not critical.

However, if the wear is excessive, repair it.

Wear on the Race

Cause: Abrasion; normal wear.

Remedy: Repair it.

Wear on the Side Flange

Cause: Operation on slopes; misalignment.

Effects: Reduces the service life cycle for the link; the idler wheel repairing is doubtful.

Remedy: Install or keep the guide protection on the track; re-align the idler wheel and the roller support; repair the idler wheel.

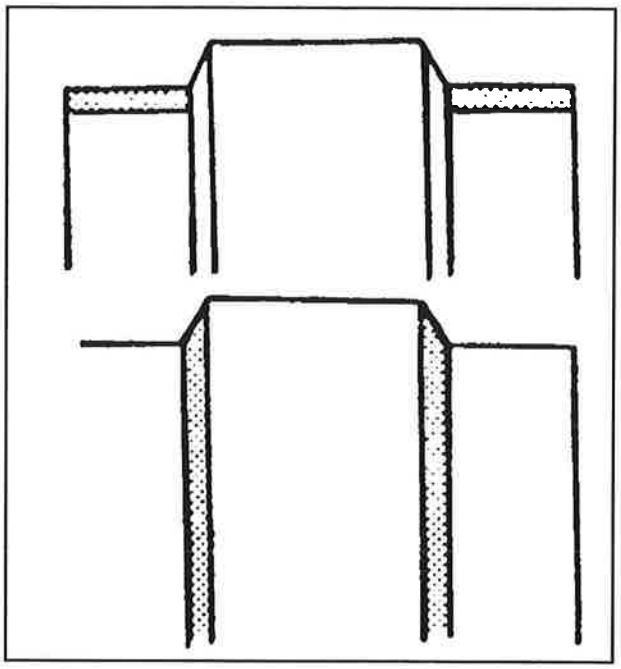

2

COOLING SYSTEM

DESCRIPTION

The cooling system is located on the highest part in the harvester, in order to obtain a better air flow.

DISASSEMBLY

Assembly is in the reverse order of disassembly.

CAUTION DURING DISASSEMBLY

- *Check the bearings.*
- *Check the fan for excessive wear.*
- *Check the hoses for their condition.*
- *Check the belts for their condition.*
- *Check the pulleys for their condition.*
- *Check the radiators for their condition.*
- *Clean the radiators.*

ASSEMBLY

1. Assembling the radiators in the frame

1.1. Install three 1.20 m supporting rubber strips in the "cooling package" frame . Install the strips, making sure they are aligned among themselves and positioned 60 mm aside each other.

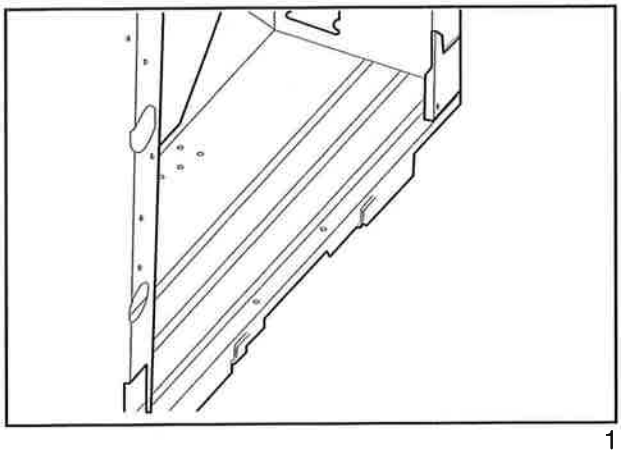

1

1.2. Before assembling the radiators, place the 1,100 mm rubber protector strips on both sides of the radiators frame front side area.

Using a maul, properly fasten the protectors.

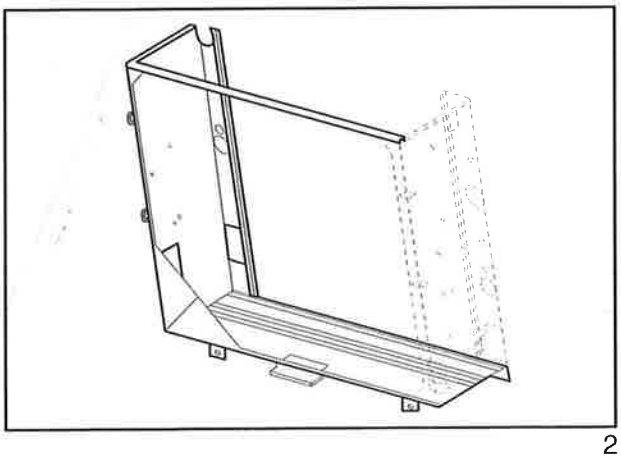

2

1.3. Install the rubber seals (1) (white) on the right side nozzle and the seal (2) (black) on the left side nozzle in the intercooler air radiator, applying a coat of silicon on the nozzles and on the seals surfaces.

NOTE: *Install the seals with the smaller side facing out.*

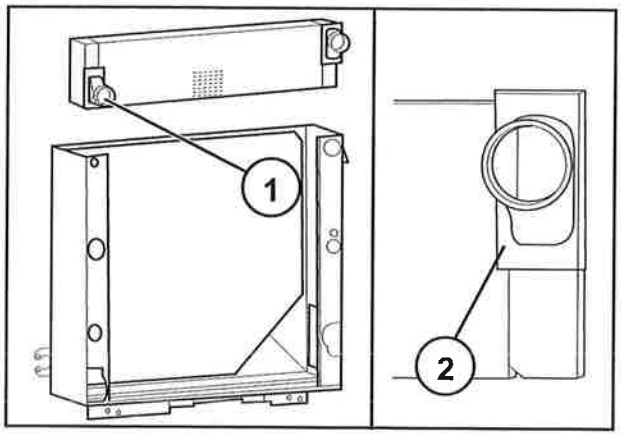

3

1.4. Place the rubber 1,100 mm strips each on the radiator top surface, positioning one strip on the center and the other at the ends of the radiator.

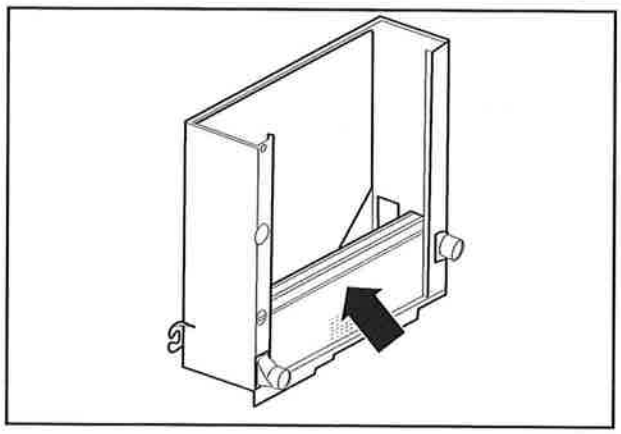

4

1.5. Place the rubber seal with its adhesive side facing the oil cooler and applying Vaseline on the tubes and seals surfaces.

NOTE: *Install the seals with the smaller side facing out.*

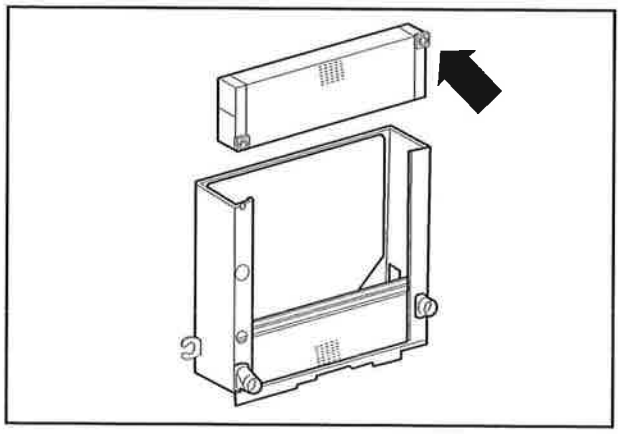

5

1.6. Position the radiator inside the frame, paying attention to the hole in which the scraper shaft passes through and which must be on the upper portion of the radiator and also to the holes on the frame for the correct assembly of the nozzles.

WARNING: *Install the radiator with the holes on the upper side.*

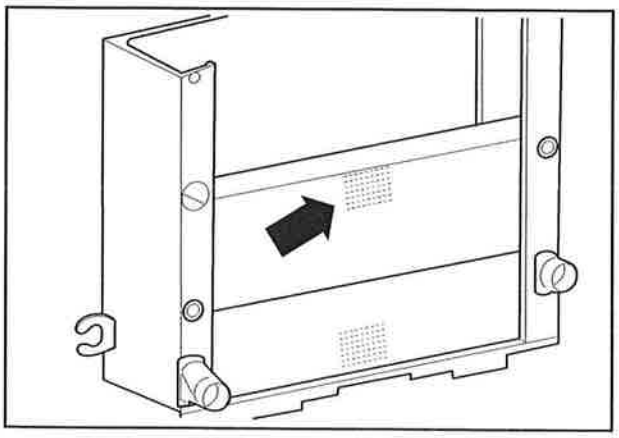

6

1.7. Place the rubber strips of 1,100 mm each on the oil cooler top surface, positioning one strip on the center and the other at the ends of the cooler.

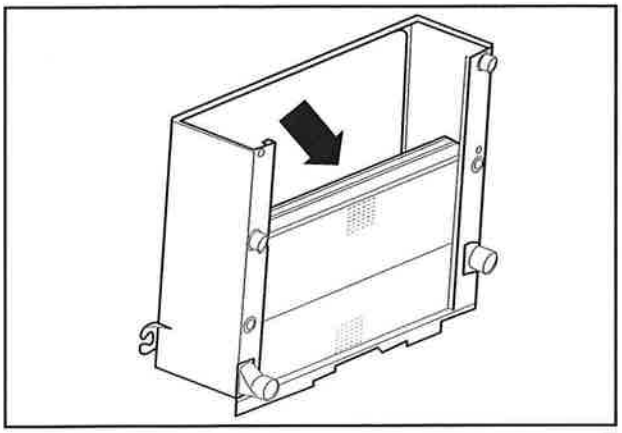

7

1.8. Assemble the rubber seals smaller tubes on the large outlet on the right side and on large outlet on the water radiator left side, applying silicon to the nozzle and to the seals surface.

NOTE: *Install the seals with the smaller side facing out.*

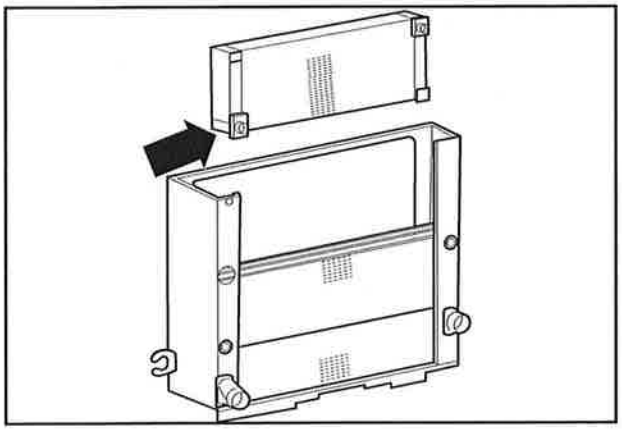

8

1.9. Place it inside the frame, paying attention to the correct positioning of the nozzles on the frame holes.

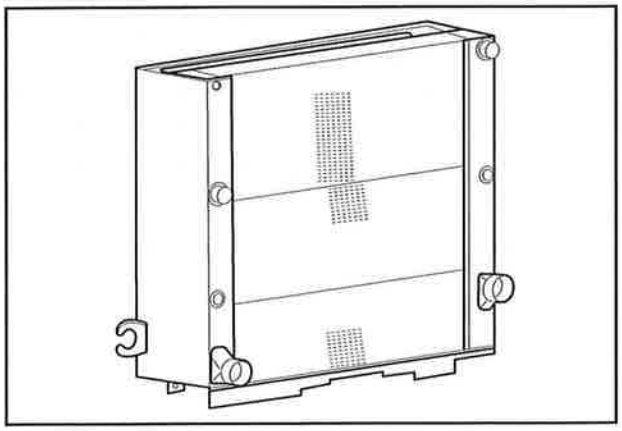

9

1.10. Place the 1,100 mm rubber strips each on the radiator top surface, positioning one strip on the center and the other at the ends of the radiator.

NOTE: *The radiator must be leveled with the frame sides.*

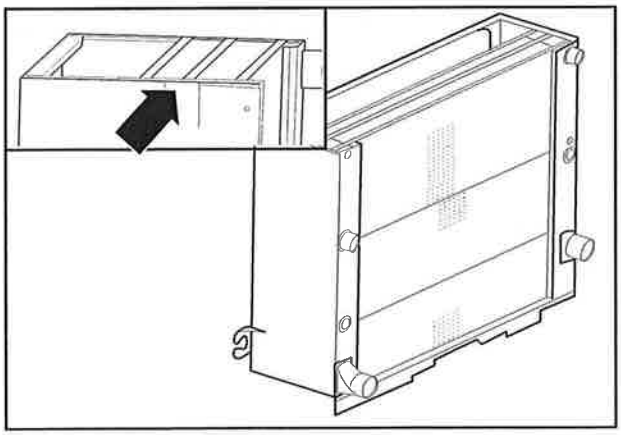

10

1.11. Install the cover and fasten it. Just position the bolts, which must be tightened after installing the angles.

NOTE: *Pay attention for the cover correct positioning.*

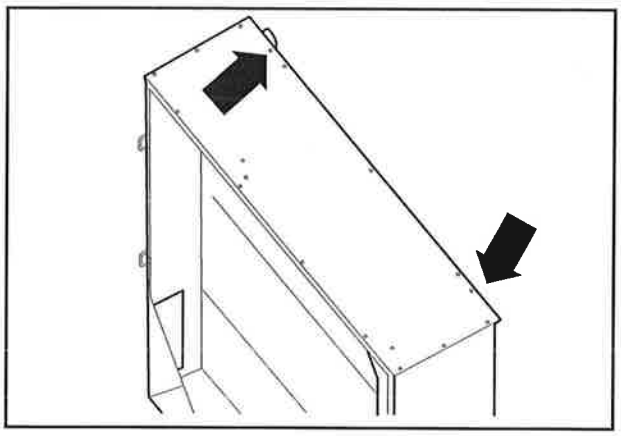

11

1.12. Install a 1,100 mm rubber strip on the angles. Position it on the left and right sides of the frame.

Install the bolts with the nuts inside the frame.

Install the rubber strips on the thrust face with the radiators.

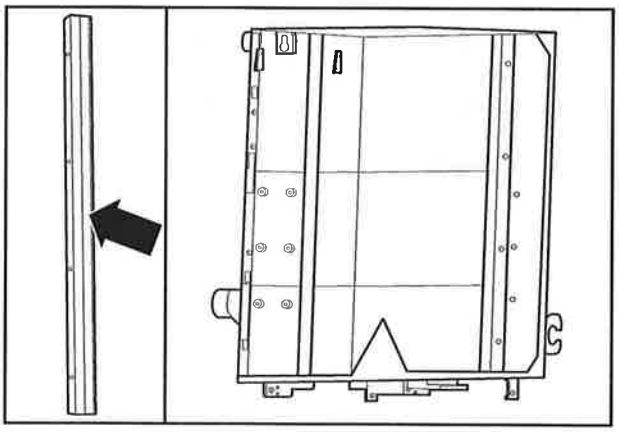

12

1.13. Install the angle on the frame, checking the radiators for the correct alignment before tightening and push the angle against the radiators in order to remove the clearance.

NOTE: *Install the bolts only on the indicated places.*

NOTE: *There cannot be openings after the cover assembly.*

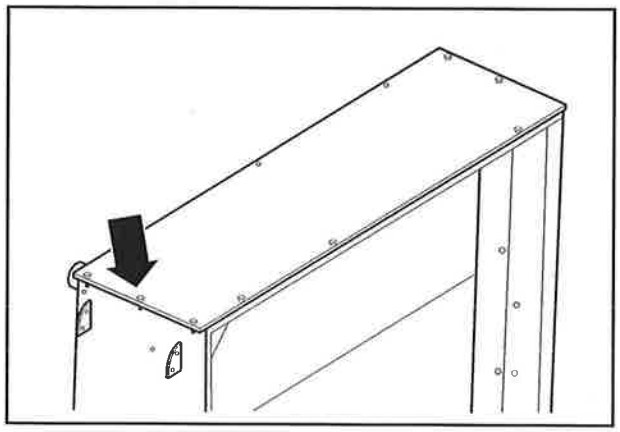

13

1.14. Install the door check plate on the cover in the radiators frame.

(1) - Plain washer

(2) - Bushing

(3) - Nut

(4) - Bolt

(5) - Plate

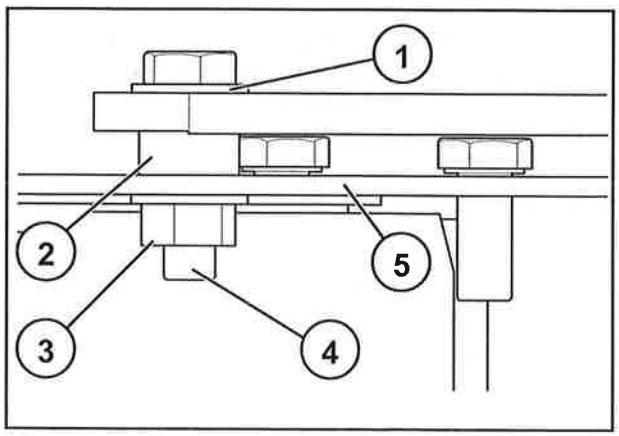

14

1.15. Install the adapter, the plug (3) and the nipples.

- Adapter (1): Torque = 30 N.m
- Nipple (2): Torque = 190 N.m

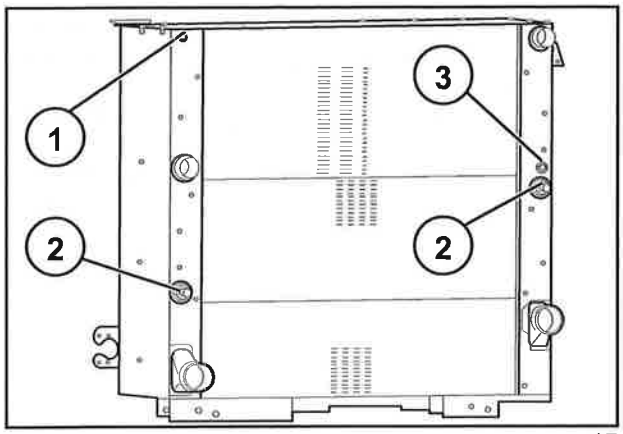

15

FOR ROTARY SCREEN MACHINE

2. Radiator scraper assembly

2.1. Install the snap ring (1) on the bushing (2); tap the bearings (3) placing a washer between them. Tap the shaft on the bushing side on the area without threads.

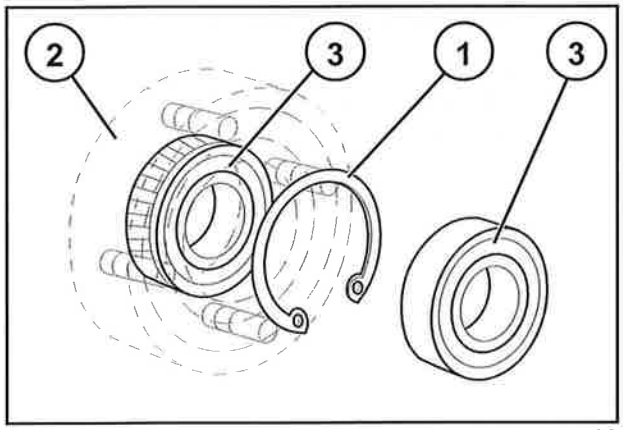

16

2.2. Install the assembly over the scraper blade (1), mounting it with its ends bent inward and fastening it with bolts.

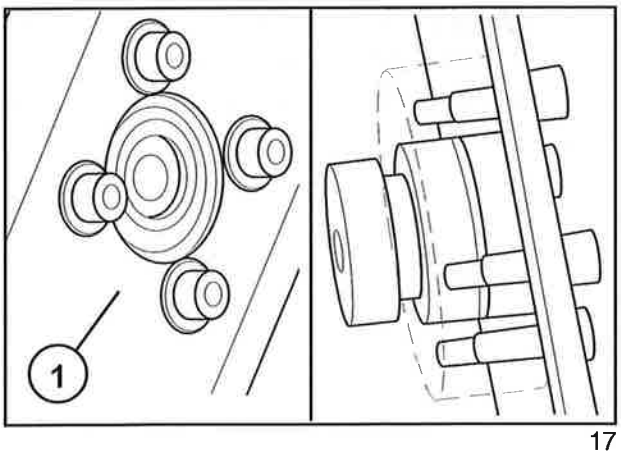

17

2.3. Install the bolt (1) on the blade (1) with a washer (2) in contact with the bearing inner race, and one washer in contact with the radiator.

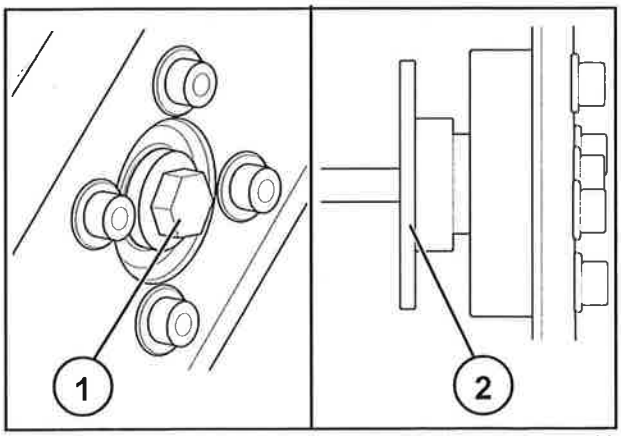

18

2.4. Assembly the scraper blade in the radiator, positioning the pin on the hole on the oil cooler, and placing a washer on the opposite side touching the radiator; torque it to 28 N.m.

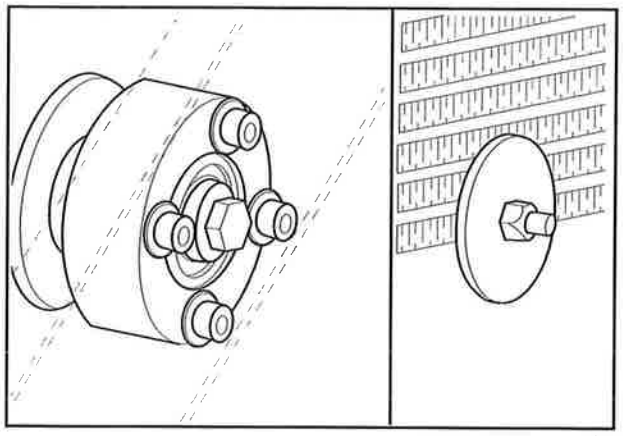

19

3. Installing the shaft on the door

3.1. Install the shaft on the door, applying anti-seize on the shaft so that the bolt fitting matches the fitting hole.

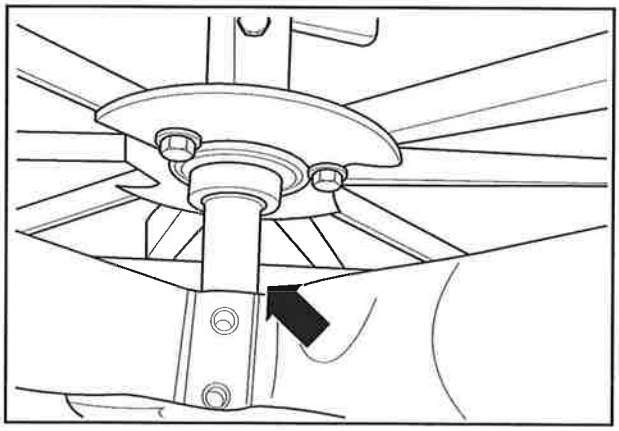

20

3.2. After positioning it, fasten the rotary air screen using a bolt and torque both bolts to 55 N.m.

NOTE: *Mark the bolts where the torque was applied with a green ink.*

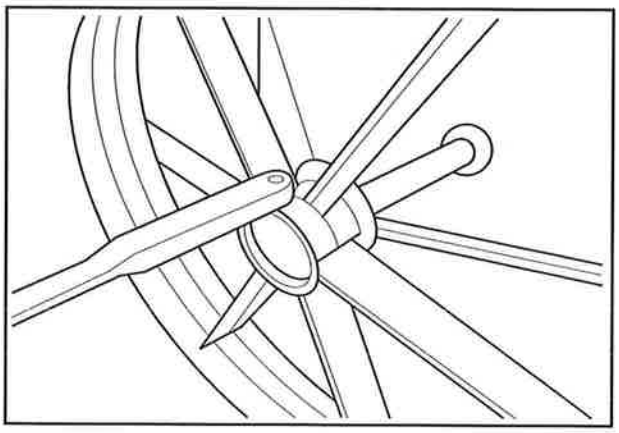

21

3.3. Position the condenser on the door and fasten it, using bolts.

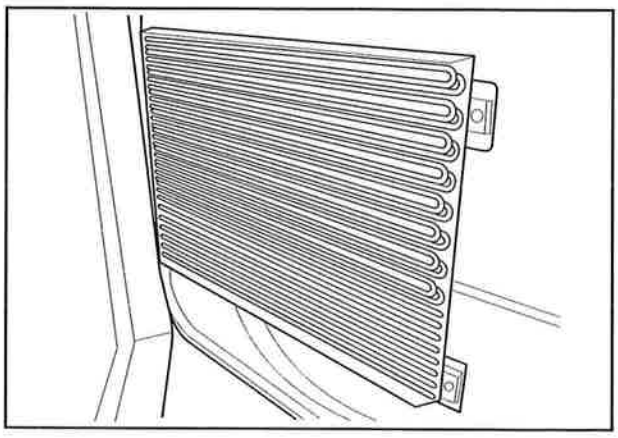

22

4. Rotary air screen assembly

4.1. Install the pulley, using bolts (1), bushings (2), washers (3) and nuts (4).

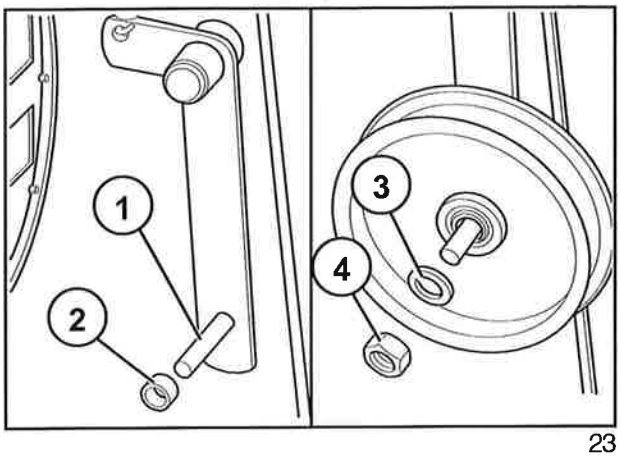

23

4.2. After assembling the pulley, install the belt (1) and install the rotary air screen protections, fastening them with bolts.

WARNING: *The belt must be installed under the support.*

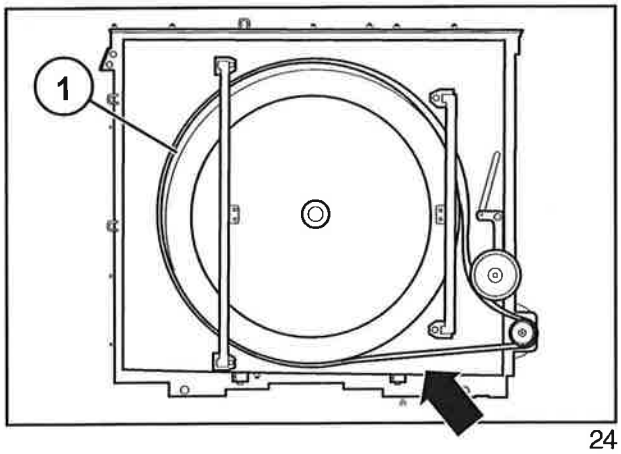

24

5. Ventilation system assembly

5.1. Fasten the boot using bolts and torque them to 28 N.m.

WARNING: *Install the boot fastened to the supports.*

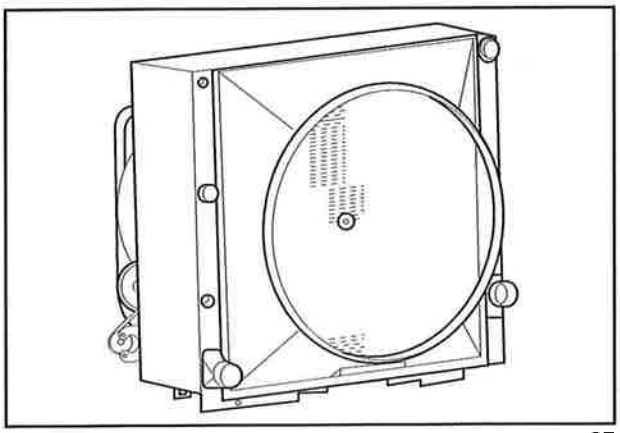
25

5.2. Install the bearing (1) on the fan support (2), tapping on it until it seats onto the support.

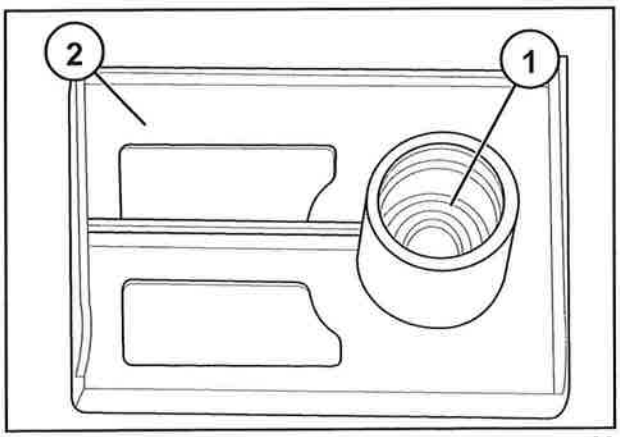

26

5.3. Install the cover (1), the ring (2) and the bearing (3) on the shaft. Install the snap ring and tap the shaft until it touches the lower bearing. Fasten the cover using bolts.

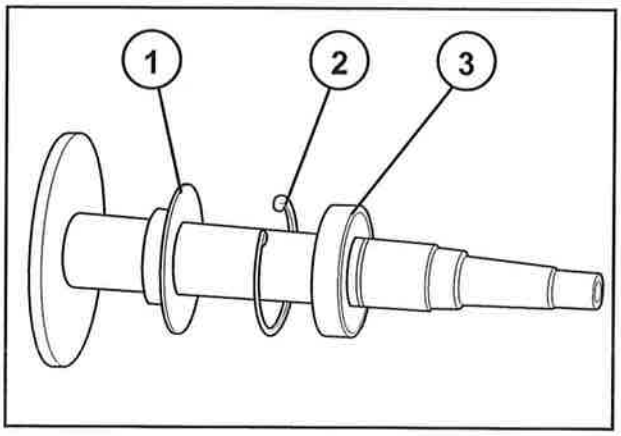

27

5.4. Install the fan support on the holder (with the opened section facing up and the tubes support) and fasten it using bolts.

NOTE: *For this step do not torque the bolts to the end, in order to align the pulleys.*

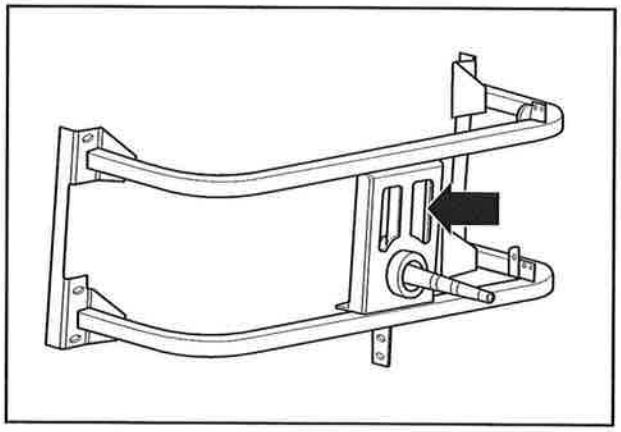

28

5.5. Install the fan, using bolts.

NOTE: *Torque the bolts in "X" pattern. Pay attention to the fan position.*

Apply Loctite 262.

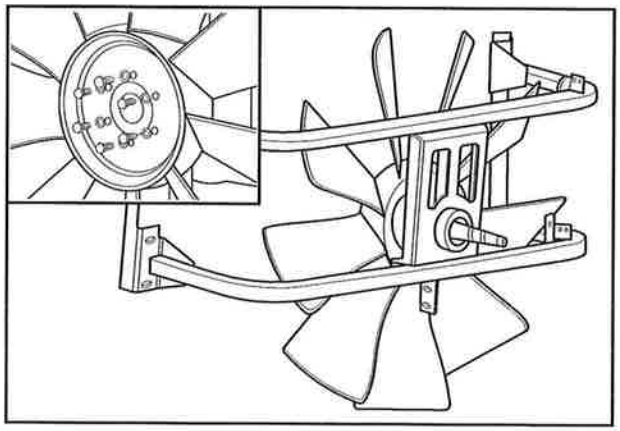

29

5.6. Install the support with the fan in the frame.

NOTE: *Pay attention to avoid installing the frame inverted.*

NOTE: *Install the frame with the angle bracket facing down.*

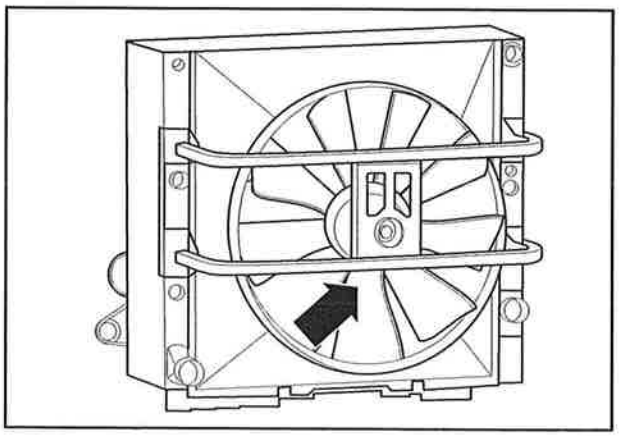

30

5.7. Install the pulley. Torque the bolt to 55 N.m.

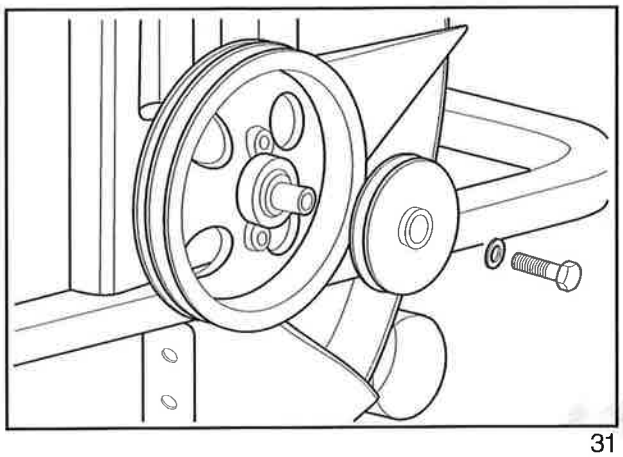

31

6. Rotary air screen shaft assembly

6.1. Install the bearing with two bolts on the shaft until it touches the smaller machined side, and install the pulley.

Torque the pulley mounting bolt to 55 N.m.

Apply Loctite 262 on the bolt.

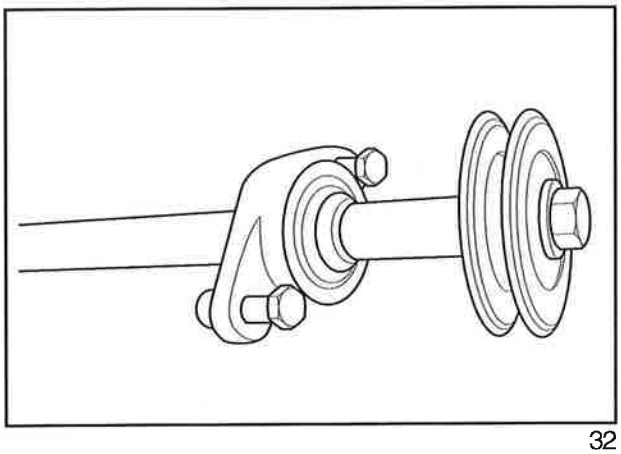

32

6.2. Install the bearing (1) and the plate (2) on the other end, and fasten them on the support using two bolts.

Install the grease nipples (3) on the bearings.

Assemble the pulley (4) with the key and two bushings.

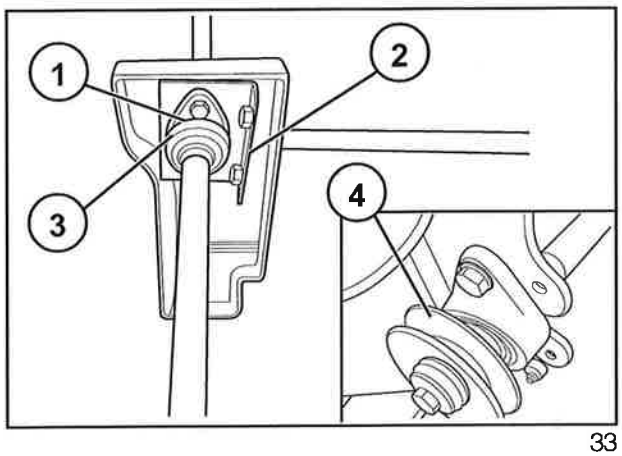

33

6.3. After the assembly, apply grease 251H EP on the bearings.

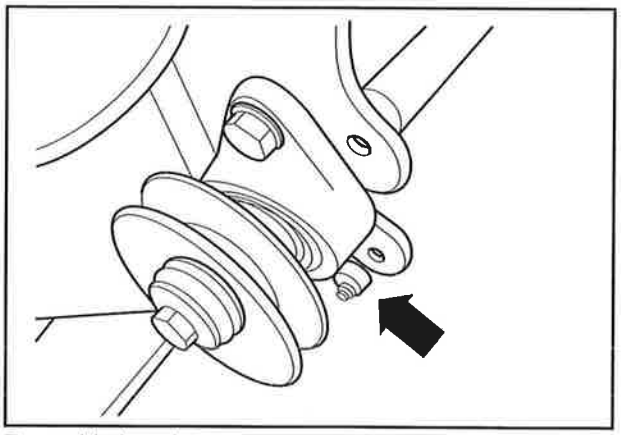

Rear side bearing 34

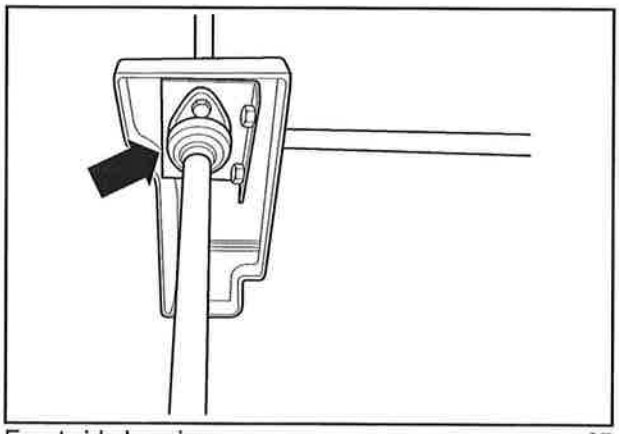

Front side bearing 35

8. Belts assembly

8.1. Install the belt, passing it by the engine pulley, idler pulley on the engine compartment and fan pulley on the cooling package.

Torque: : 445 N.m

NOTE: *Check the pulleys alignment with a calibrated ruler.*

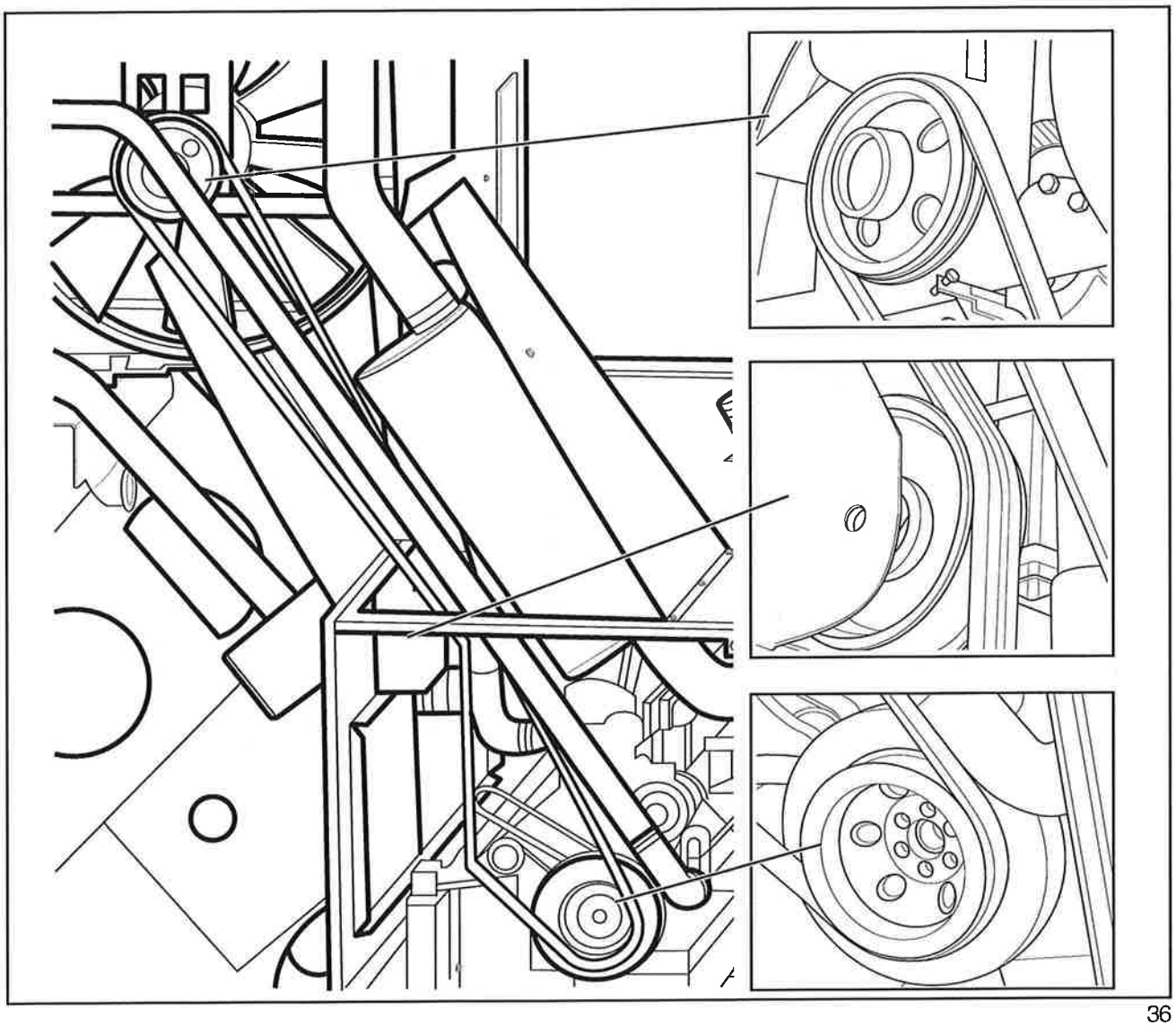

36

9. Pulleys alignment adjustment

9.1. Position the ruler side so that it contacts the pulley on two sides.

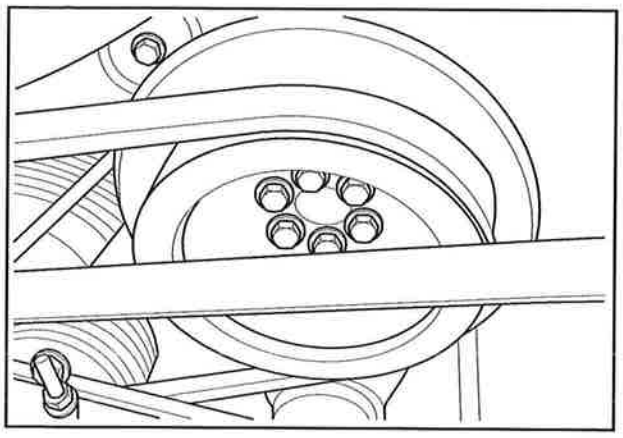

37

9.2. Touch the ruler on the central pulley to check the centralization.

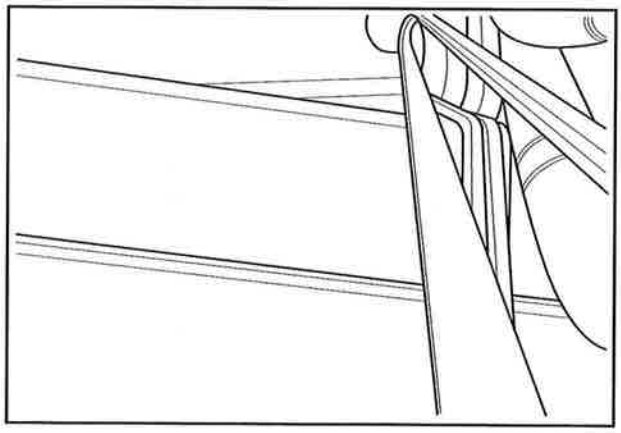

38

9.3. Position the ruler side so that it contacts the pulley on two sides.

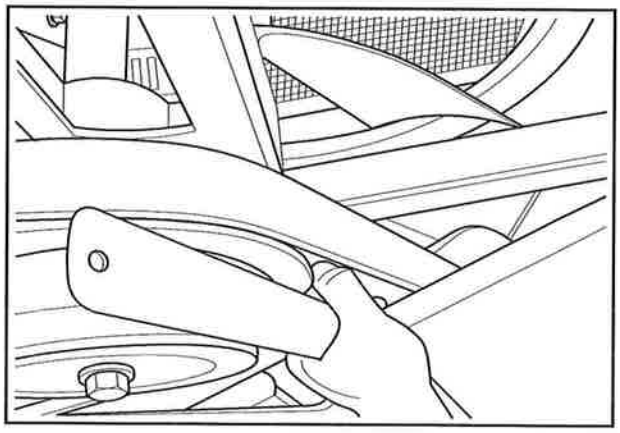

39

NOTE: *The maximum allowance is 2 mm clearance.*

To adjust it, perform the following procedures:

9.4. Loose the bolts and re-position the pulley.

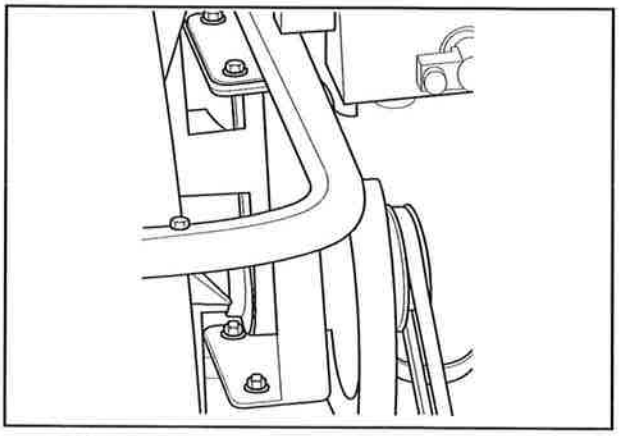

40

9.5. Adjust the pulley position so that the ruler touches it in two points.

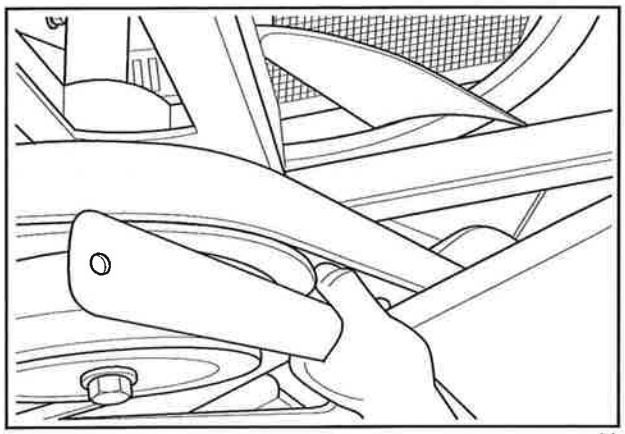

41

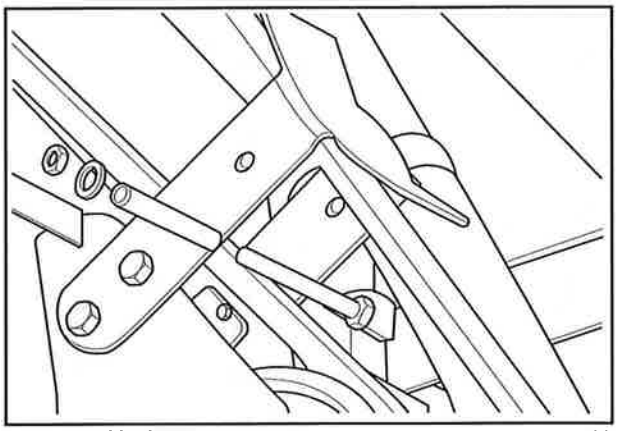

Tube and bolt 42

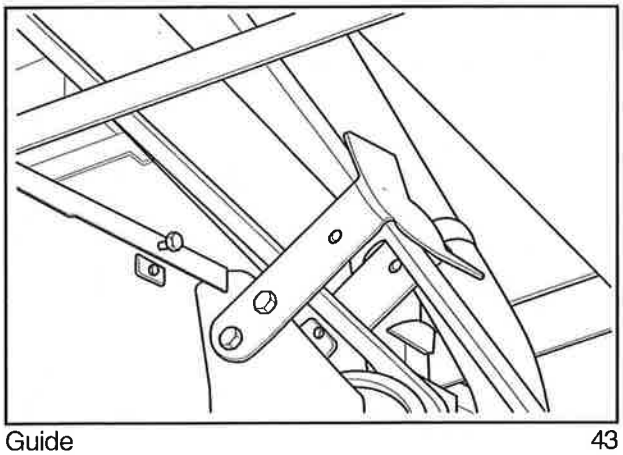

Guide 43

9.6. Install the cooling package belt on the fan shaft pulleys.

Adjust the pulley position on the shaft to perform the alignment, using the oblongs on the bearings and the adjusting bolts on the shaft support.

Torque: 270 N.m

NOTE: *Check the pulleys alignment with a calibrated ruler.*

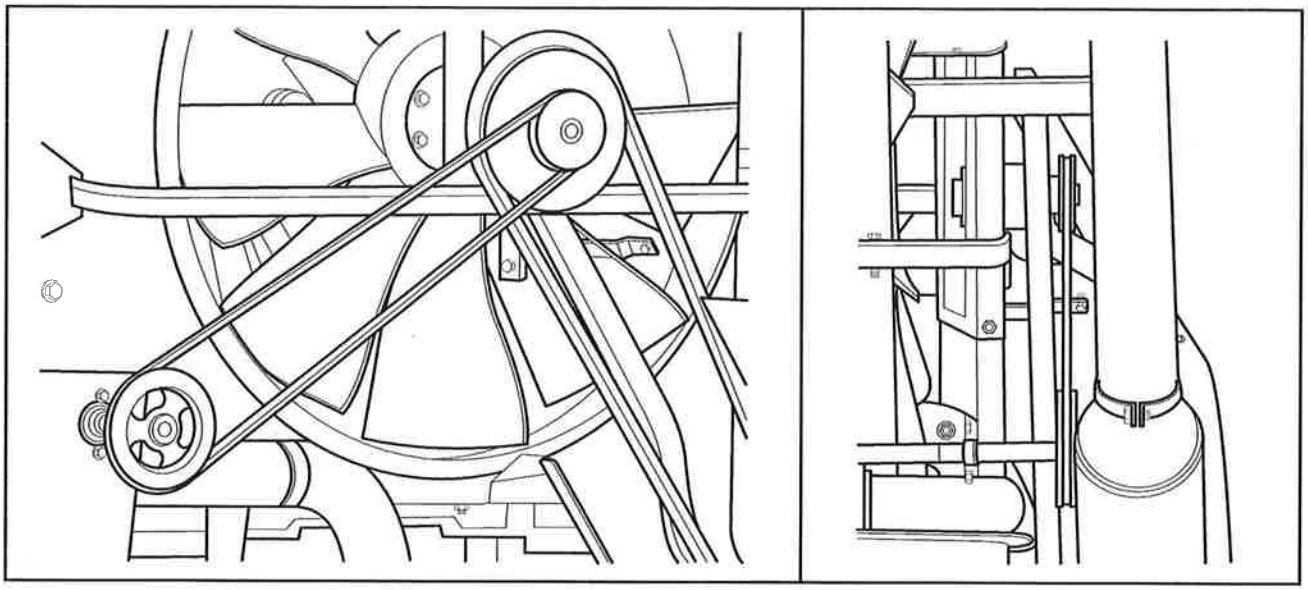

44

10. Pulleys alignment adjustment

10.1. Position the ruler side so that it contacts the pulley in two sides.

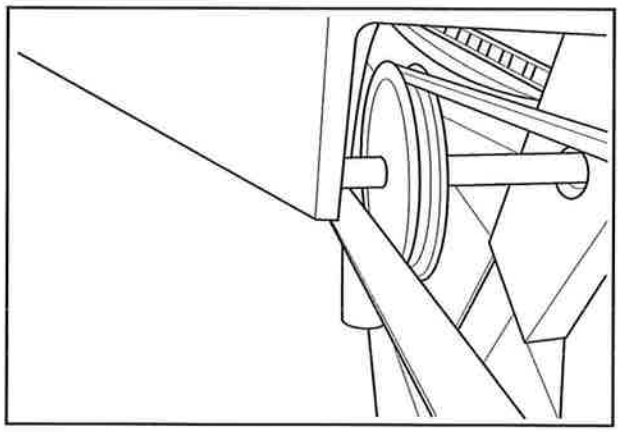

45

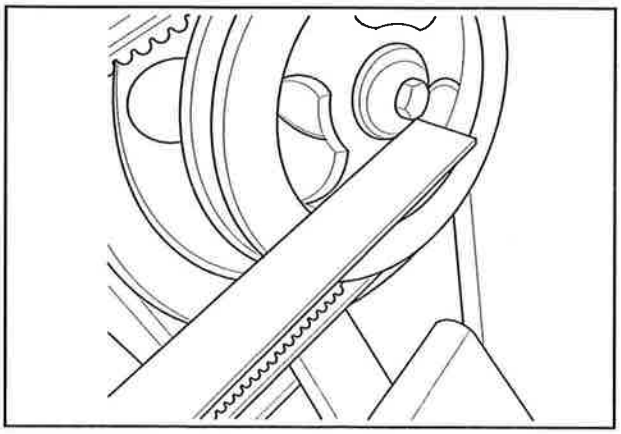

46

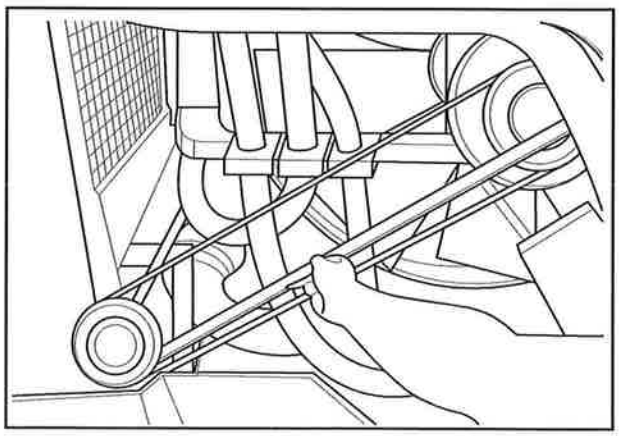

47

NOTE: *The maximum allowance is a 2 mm clearance.*

To adjust it, perform the following procedures.

10.2. Align the pulley by loosing the two bolts and re-position it. Re-tighten the bolts after the adjustment.

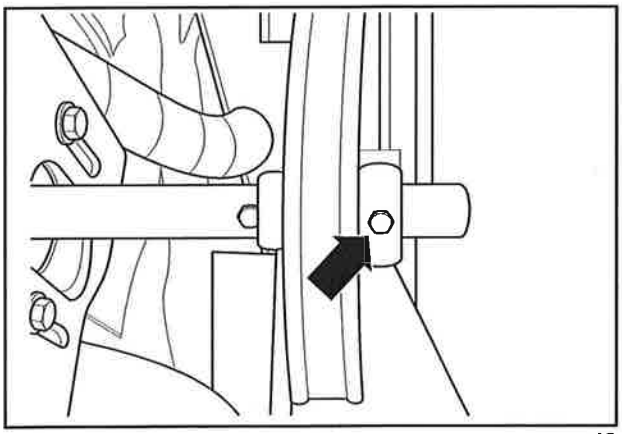

48

10.3. Adjust the belt tension using the adjusting bolts.

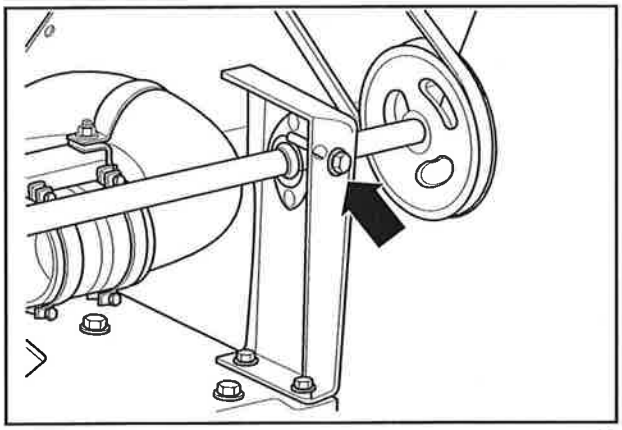

49

FOR FIXED SCREEN MACHINE

10. Assembling the fixed screen

10.1. Install the metallic latches (1).

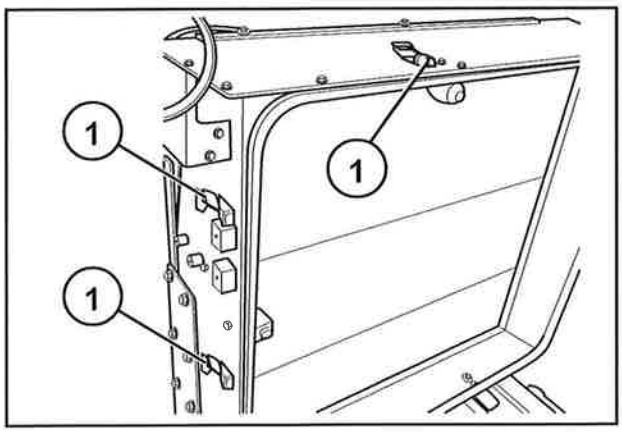

50

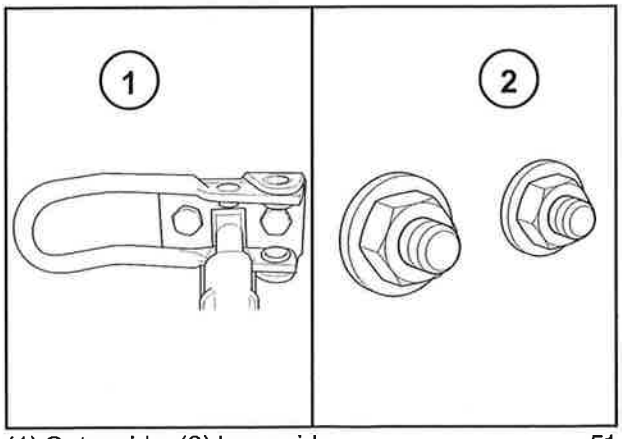

(1) Outer side; (2) Inner side 51

10.2. Install the stop plate (1).

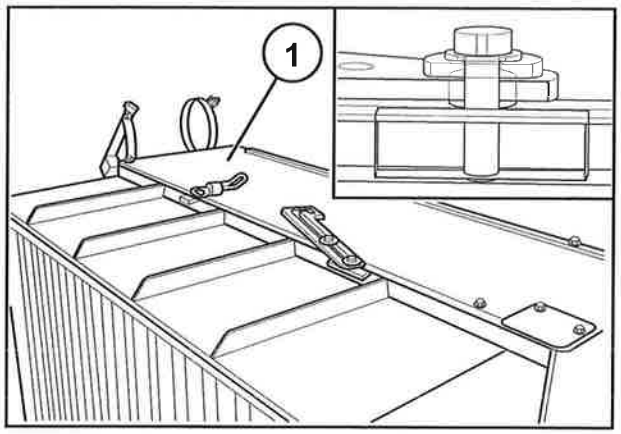

52

10.3. Position the condenser (1) on the fixed screen, fitting it onto the pins (2).

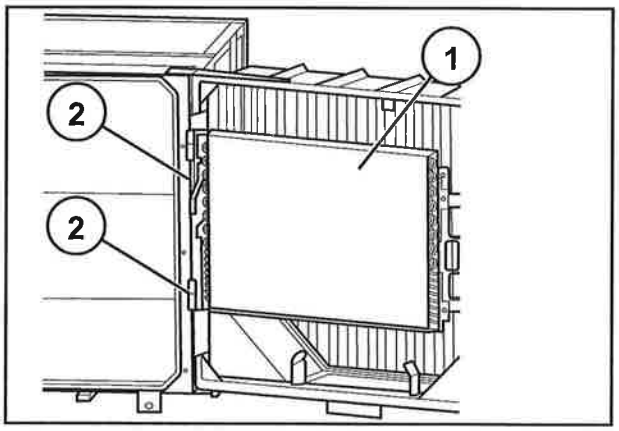

53

10.4. Fasten handle (1) to the fixed screen.

NOTE: *The handle must be installed behind the fixed screen's welded bracket.*

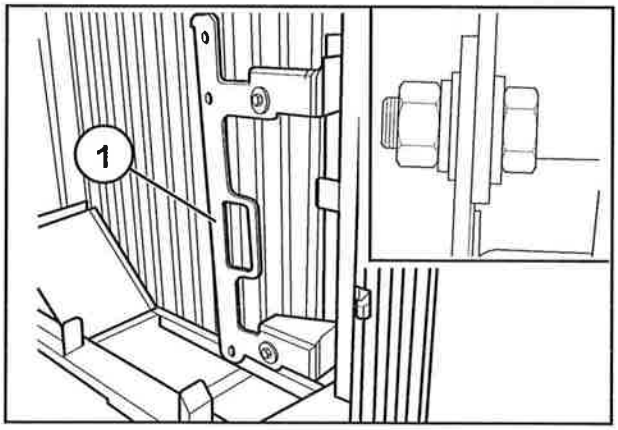

54

10.5. Fasten handle (1) to the condenser.

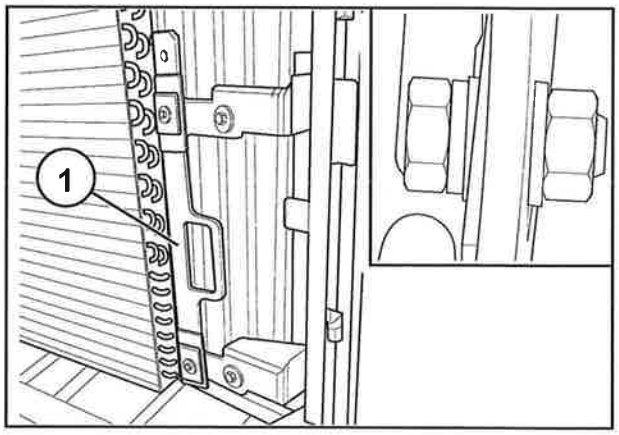

55

11. Assembling the fan system

11.1. Fasten the fan support and tighten to the torque of 28 N.m.

NOTE: *Use flat washer on the upper part. Use spring washers on the side parts.*

NOTE: *Install the fan support on the support pads.*

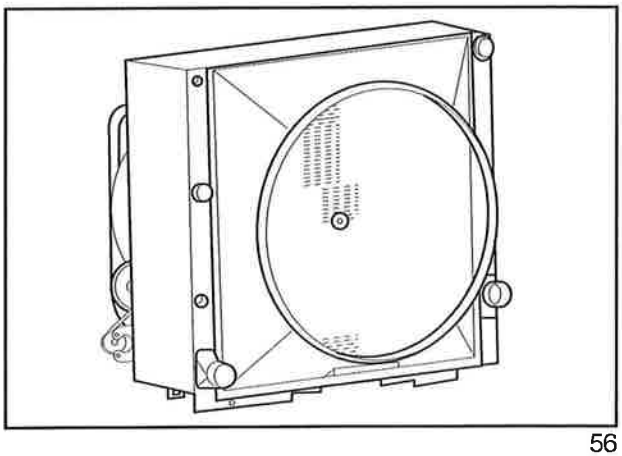

56

11.2. Apply Loctite (8800) on the bearing housing to clean it up. Install the bearing cup.

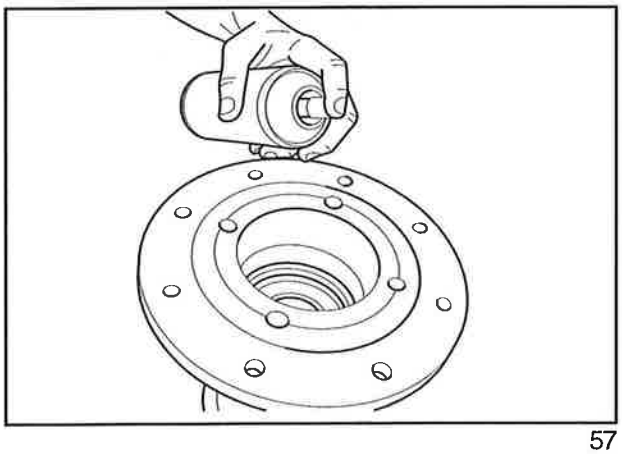

57

11.3. Hit with a driver (1) and a maul.

11.4. Hit until the cup (2) is seated on the bearing housing.

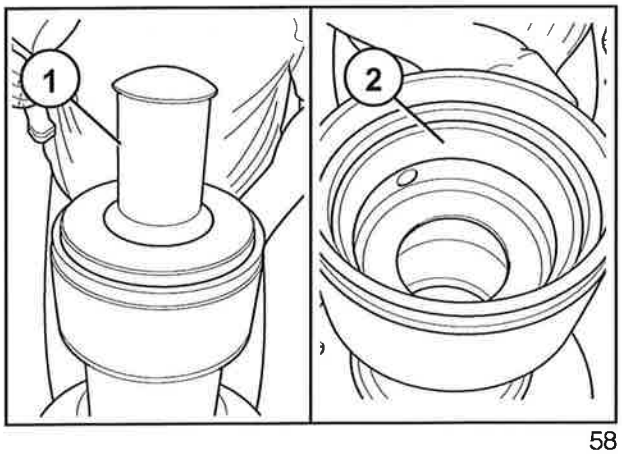

58

11.5. Apply grease on the bearing with a paint brush. Install the bearing on the bearing cup and install the seal (1) into the bearing housing (2) by using a soft maul.

WARNING: *Pay attention to the seal mounting side (1). The seal surface must be below the bearing housing upper surface (2).*

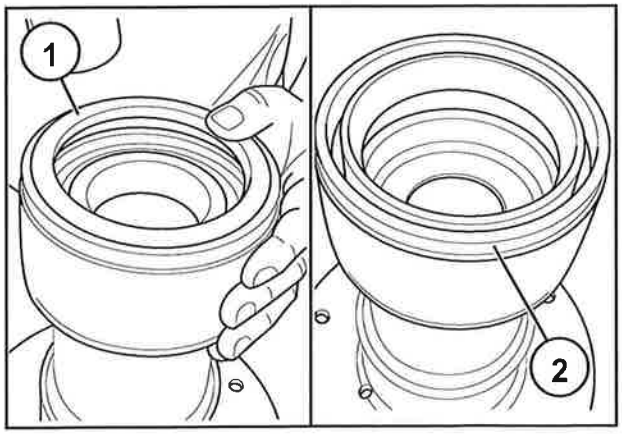

59

11.6. Install the motor shaft into the bearing housing.

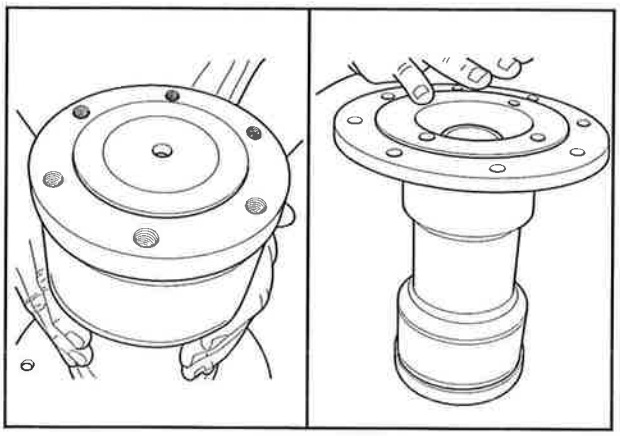

60

11.7. Install the bearing cup (1) into the bearing housing (2) by using a driver and a maul. Apply grease on the bearing with a paint brush.

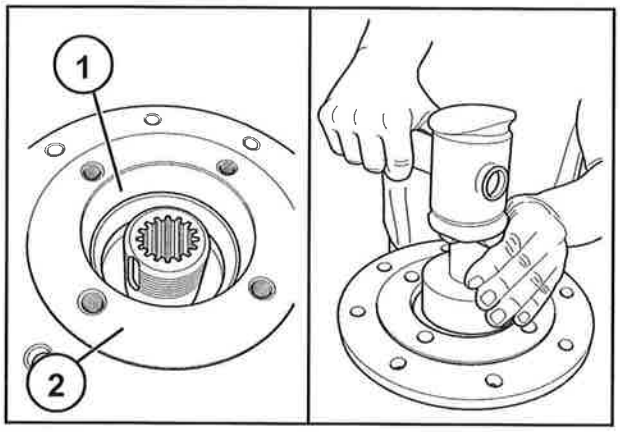

61

11.8. Install the bearing (1) on the bearing cup.

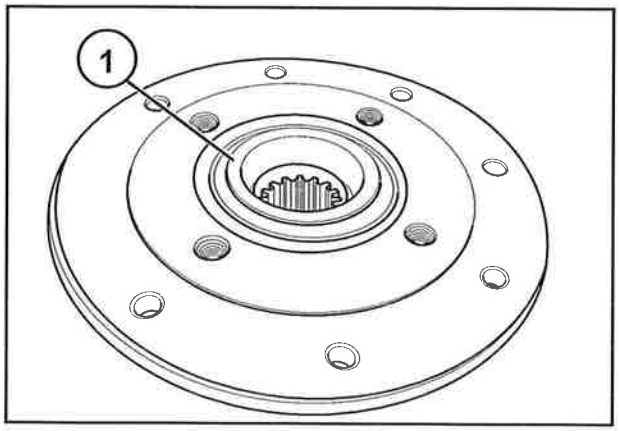

62

11.9. Install the lock ring (1) on the shaft (2).

11.10. Install the lock nut (3) on the shaft (2).

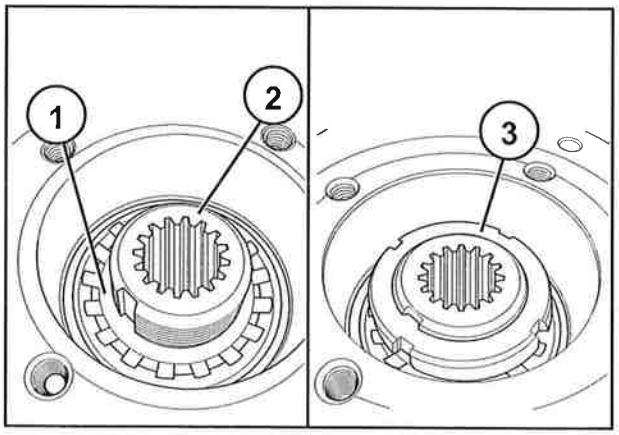

63

11.11. Tighten with a special tool and a 1-1/2" wrench. Tighten until to remove free play.

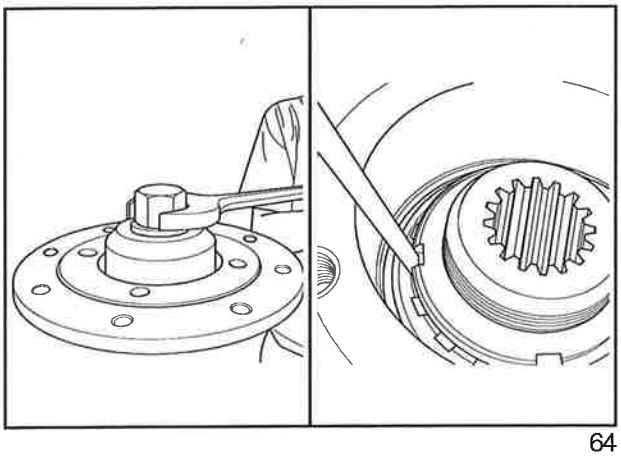

64

11.12. With a screwdriver lock the lock ring tab into the lock nut groove.

11.13. Position the pre-assembled bearing housing assembly onto the support.

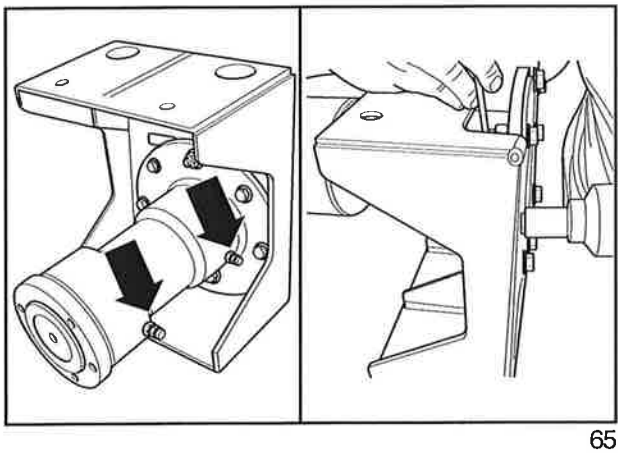

65

WARNING: *Pay attention to the position of the holes.*

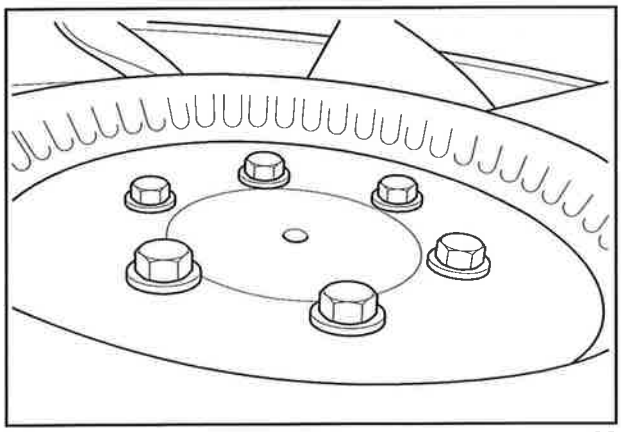

66

11.14. Install the fan onto the shaft.

NOTE: *Tighten with a "crisscross" pattern.*

WARNING: *Pay attention to the position of the fan.*

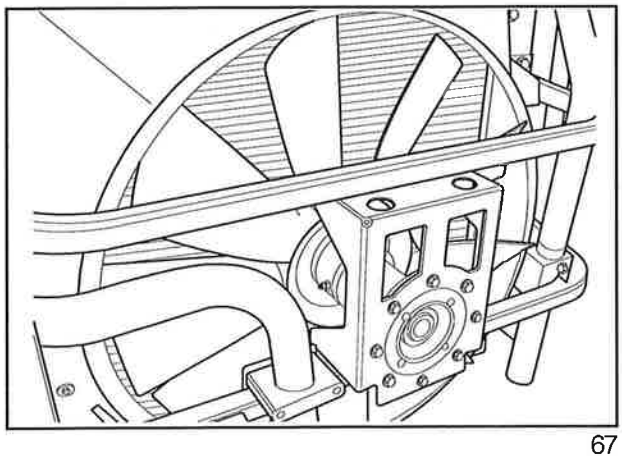

67

11.15. Install the welded assembly.

WARNING: *Be careful to not install the frame in an inverted position.*

NOTE: *Install the welded assembly with the bracket (1) facing down.*

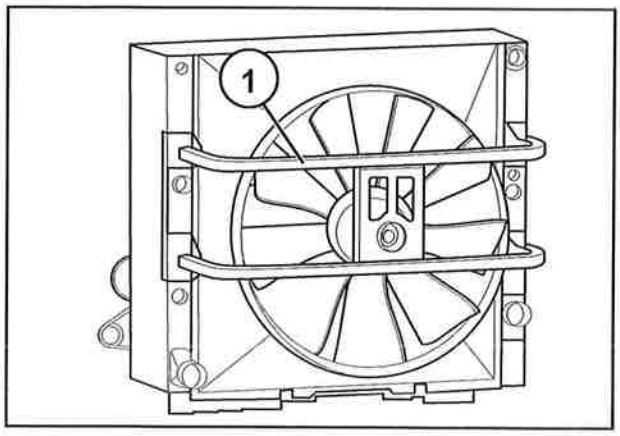

68

11.16. Apply Anti-seize compound on the motor's gear and Ultra Black around the motor.

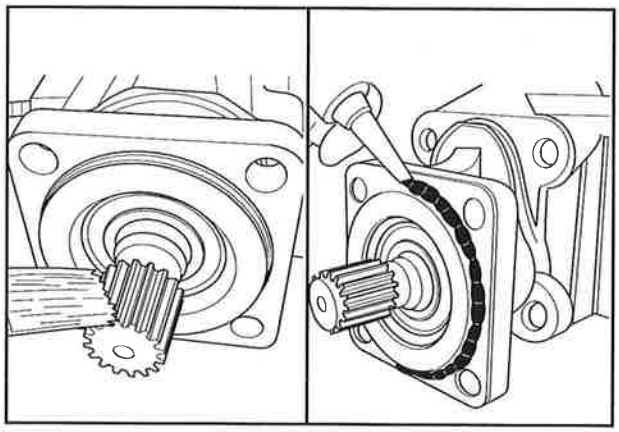

69

11.17. Apply Loctite 262 on the bolt threads.

WARNING: *Pay attention to the position of the motor (motor's drain (1) facing down).*

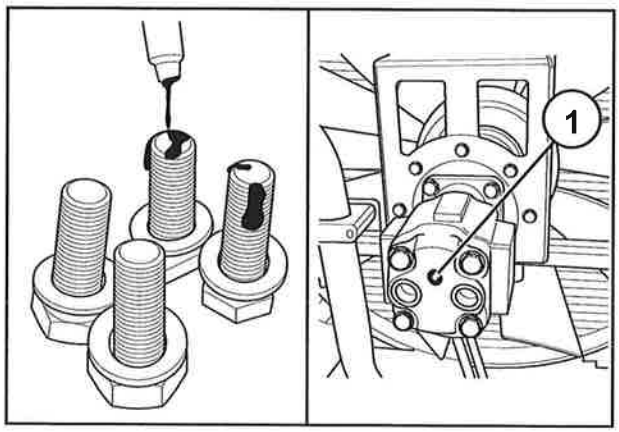

70

12. Assembling the expansion tank

12.1. Install the expansion tank lower bracket and torque the capscrews to 28 N.m.

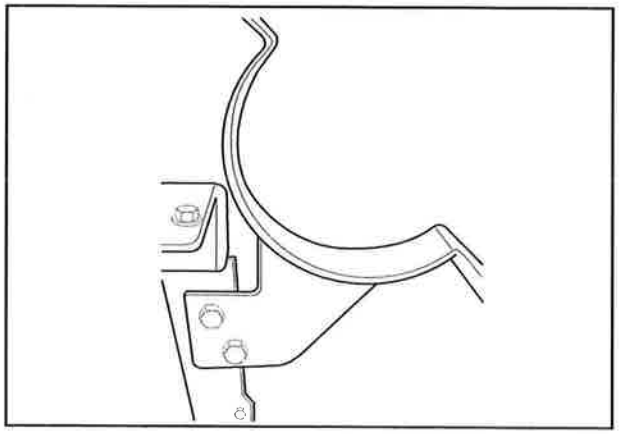

71

12.2. Install the expansion tank.

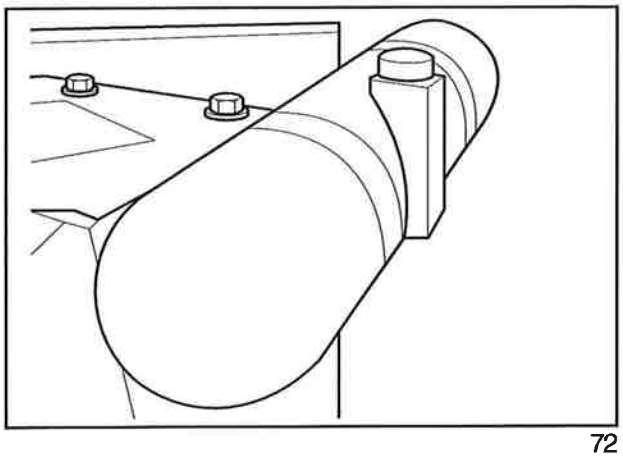

72

12.3. Install the water level sensor onto the tank with "float" facing down.

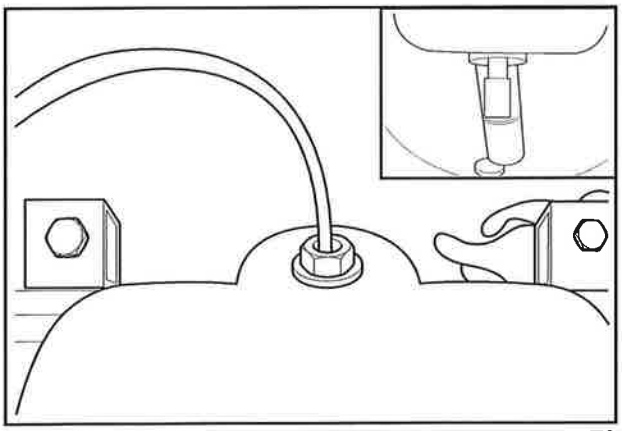

73

NOTES:

SECTION 02 - HYDRAULIC SYSTEMS

CONTENTS

Section	Description	Page
02	Precautions	3
	Basic Principles of the Hydraulic System	4
	Hydraulic System Pressure Control	4
	Location of the Hydraulic Manifold Control Blocks (Right Side)	5
	Location of the Hydraulic Manifold Control Blocks (Left Side)	6
	Location of Hydraulic Motors	7
	Location of Cylinders (A8000)	8
	Location of Cylinders (A8800)	9
	Components Specifications	10
	Oil Specifications	13
	Topper, Shredder and Side Trim Knife Circuit	14
	Basecutter, Crop Dividers, Buttlifter Roller and Fixed Roller Circuit	22
	Chopper, Feed Rollers, Knockdown Roller and the First and Second Floating Rollers Circuit	25
	Primary Extractor Circuit	28
	Elevator, Secondary Extractor and Bin Flap Circuit	31
	Cylinders Control Circuit (A8000)	34
	Cylinders Control Circuit (A8800)	35
	Transmissions and Brakes	42
	Transmission Pump Calibration	47
	Checking the Accumulators Nitrogen Load	50

WARNING: *When performing any service or maintenance on the harvester, always turn off the main switch, located on the floor on the left side of the operator's seat. Before performing any service/repair by using electric welding, turn off the main switch and, if possible, disconnect battery cables.*

PRECAUTIONS

Oil supply

No hydraulic system will work without oil. It is important to assure that there is a good and clean oil supply to the pump.

Keep the oil tank filled up to the correct level and make sure that there are no restrictions between the reservoir tank and the pump.

Blocked filters in the intake can restrict the oil supply, causing cavitation in the pump. It causes permanent damages in the pump.

Air inlet

Check if all the hoses in the suction are tightened, in order to prevent the possibility of air from entering the system; since it may causes foam in the reservoir tank and causes serious damages to the hydraulic components. Air can also enter through the seals with leakage.

Filtering

Filters are an important part in the hydraulic system and, by removing particles that may cause wear, can considerably increase the hydraulic components life. The maintenance table indicating the filters replacement must be rigorously followed.

Relief valves

Relief valves are pressure limiting devices designed to protect the components from damages caused by very high pressure. Check if they are correctly adjusted. Very low adjustments will allow the oil to be deviated, causing overheating and loss of torque, while a very high adjustment can cause severe damages due to overheating.

CAUTION: *Never try to adjust a relief valve, unless a pressure gauge is connected to the system.*

Contamination

Contamination is the major single cause of wear-out and wear-related problems in hydraulic systems. It is mandatory that all the oil and recipients be kept clean and that all the hoses or lines that are disconnected be plugged in order to prevent any contaminants from entering the system.

BASIC PRINCIPLES OF THE HYDRAULIC SYSTEM

The hydraulic system uses the principle of flow through a reduction in practically all the functions. It is important to understand this basic principle in order to understand the system functioning or, which is more important, why the system can be out of working.

- When the oil flows through a passage without restriction, the pressure in this passage, if existent, will remain constant since the flow from the pump remains constant.
- When the oil flow in a passage is totally restricted (flow = zero), the pressure in the passage will increase until it reaches the high pressure level. This high pressure is kept while the flow is blocked and while the pump is working properly. That happens independently from the component responsible for the flow blockage. No flow generates constant pressure in the passage, due to the relief valve.
- When the oil flows through a passage with a reduction, the pressure after the reduction will be smaller than the pressure before this reduction. There must have flow for this to occur. A reduction is caused by a component that provokes resistance to the flow.

The hydraulic oil of the Cane Harvester complete system is supplied by the pumps. The fluid is directed to the pump from a central hydraulic reservoir tank and through the hoses. The pumps are driven by gears connected to the flywheel. The oil flows through the filters at the reservoir tank outlet and before reaching the pumps. All the hydraulic system circuits are treated the same way; they receive the oil at the same time. The return oil flows through the return filter before it returns to the reservoir tank.

See below the list of hydraulic functions detailed in this section.

- Topper / Shredder Circuit with or without side trim knife
- Basecutter Circuit
- Chopper, Feed Rollers, Knockdown Roller, 1st / 2nd Floating Rollers Circuit
- Primary Extractor Circuit
- Elevator Circuit
- Secondary Extractor Circuit
- Track Adjusting Cylinder (A8800)
- Counterbalance
- Brake
- Transmission

HYDRAULIC SYSTEM PRESSURE CONTROL

All pressure adjustments, except the Eaton transmission pumps and motors, must be adjusted between ± 100 psi (6.9 bar), with the engine speed at 1200 RPM. All tests must be performed with the oil temperature at a 40° C (104° F).

LOCATION OF THE HYDRAULIC MANIFOLD CONTROL BLOCKS (RIGHT SIDE)

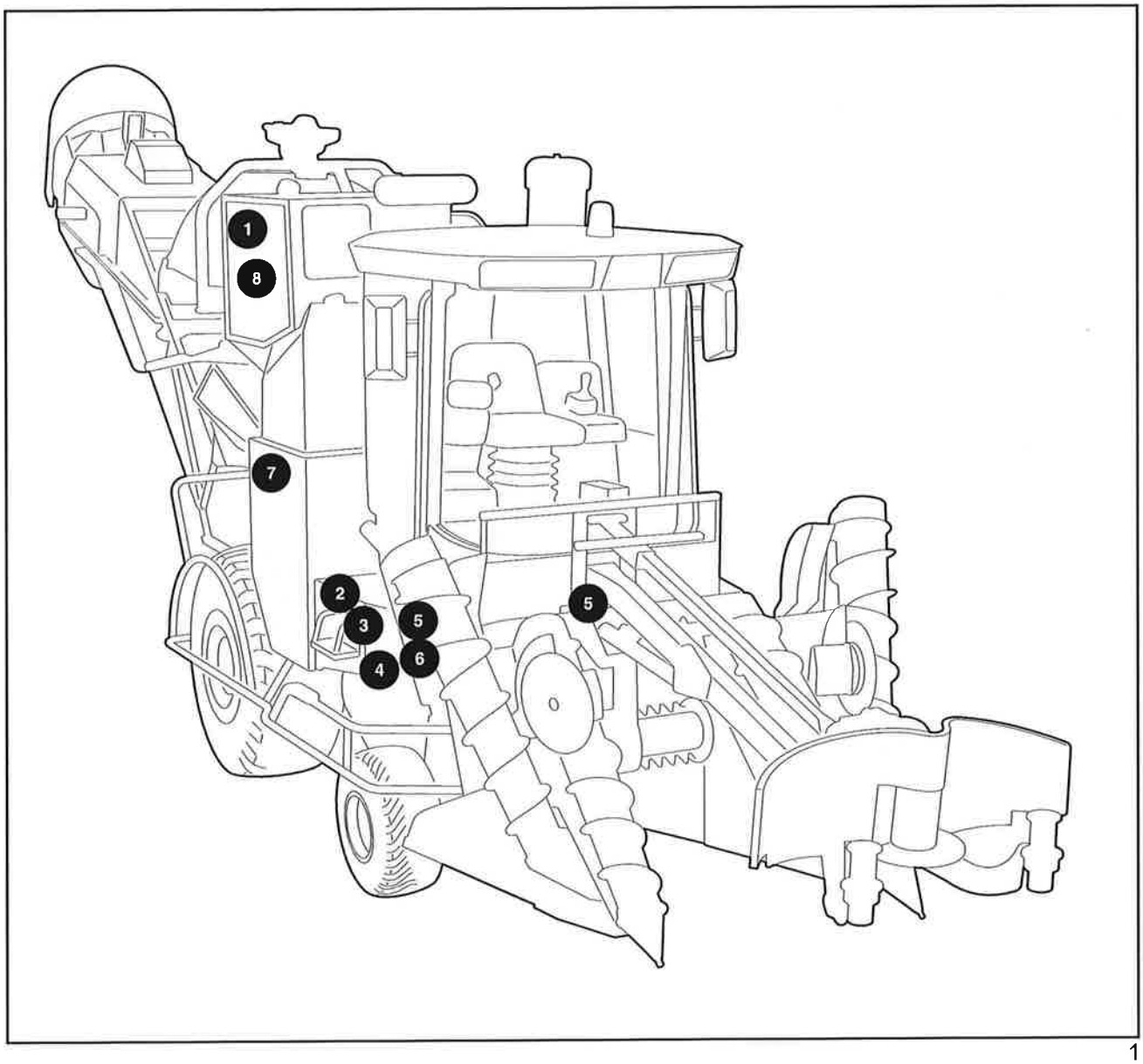

1

1 - Primary extractor block

2 - Steering block

3 - Cylinders control block

4 - BA66 Valve

5 - Accumulators

6 - Auxiliary block

7 - Cooling package manifold block

8 - Cooling package hydraulic fan motor

LOCATION OF THE HYDRAULIC MANIFOLD CONTROL BLOCKS (LEFT SIDE)

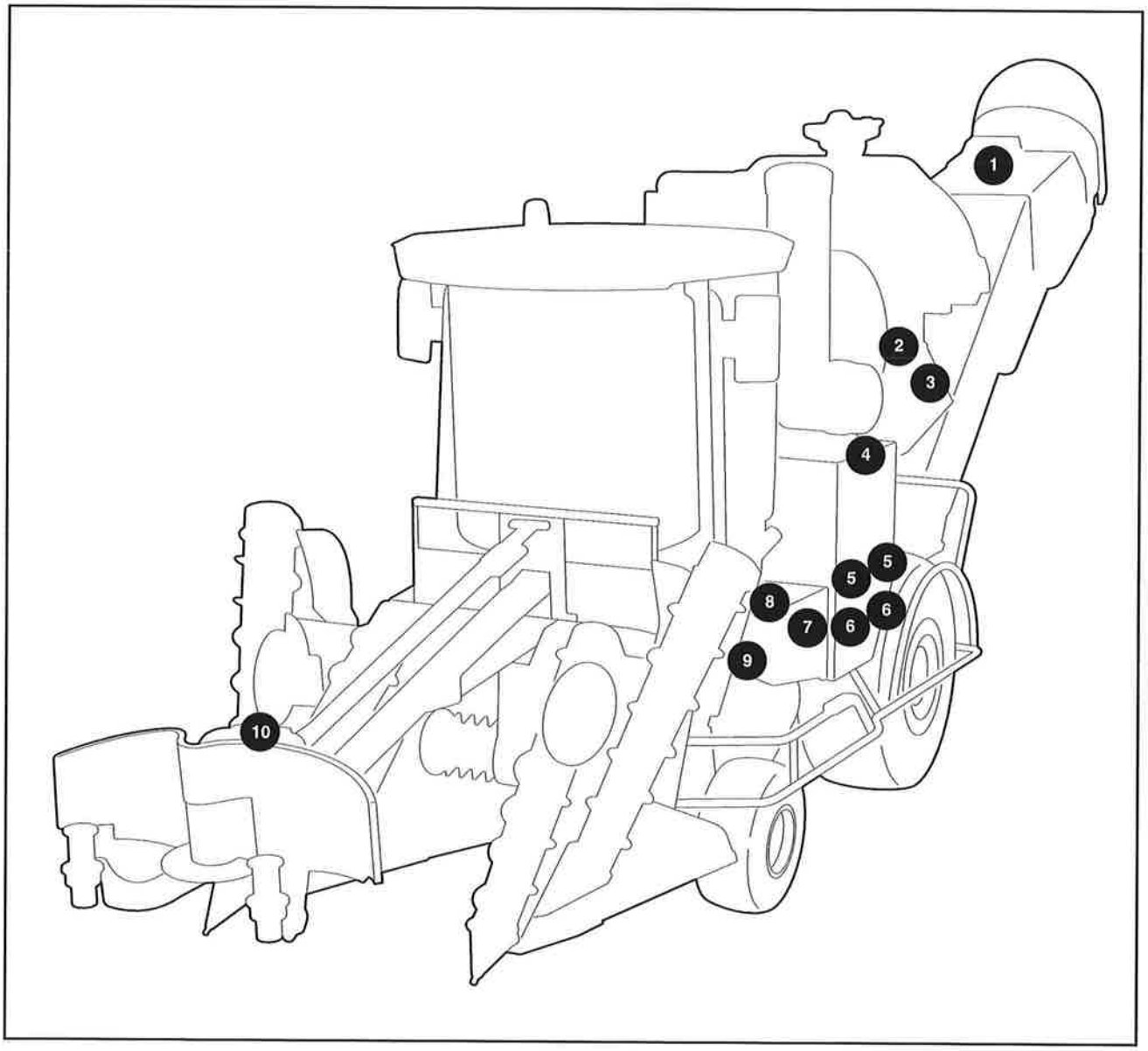

2

1 - Elevator block
2 - Flow divider
3 - Solenoid valve (Valvistor)
4 - Chopper block
5 - P365 Pump (2)
6 - Transmission pump (2)
7 - Basecutter block
8 - Flow divider
9 - Side trim knife block
10 - Topper / Shredder block

LOCATION OF HYDRAULIC MOTORS

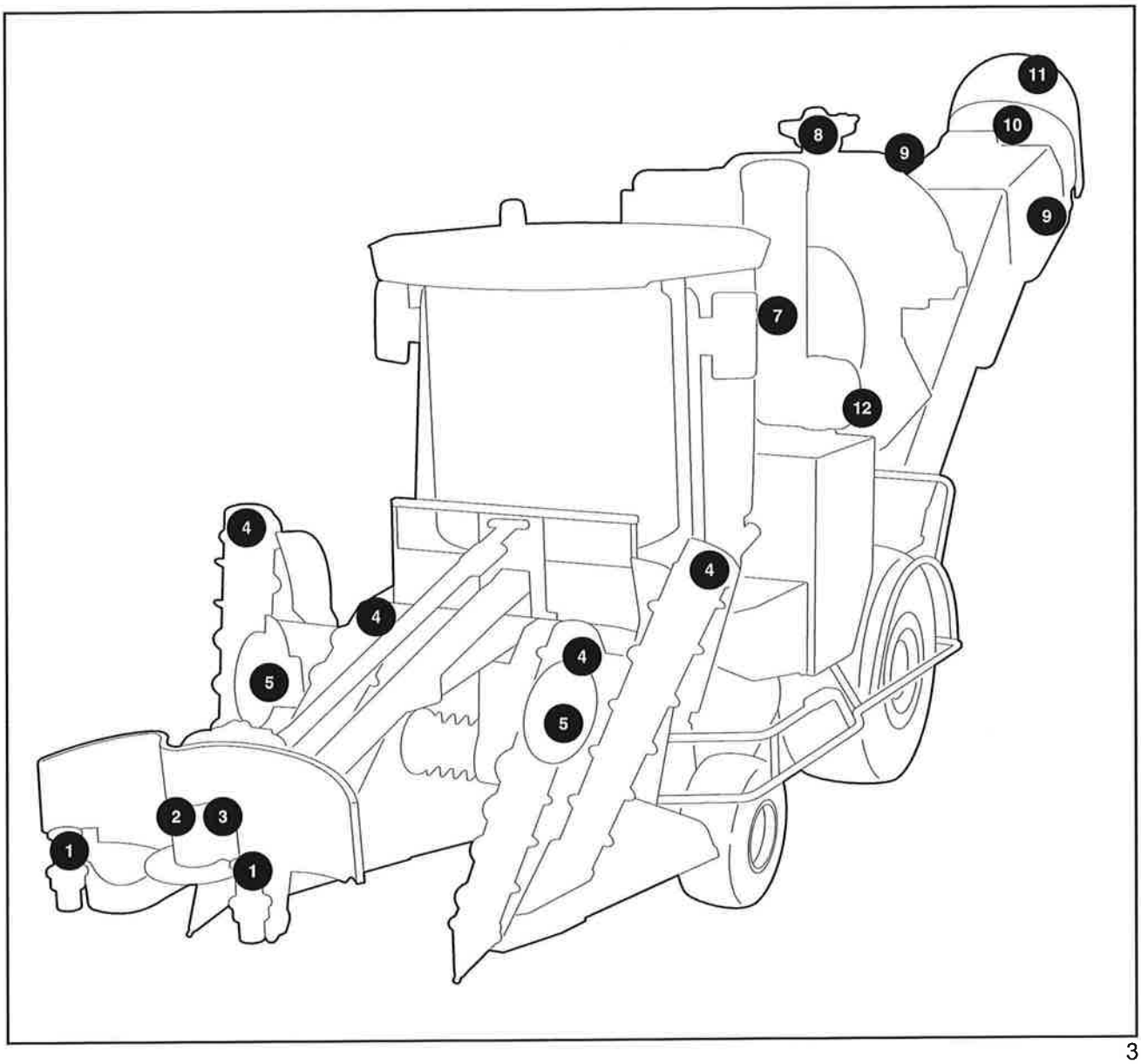

3

1 - Gathering Drums Motor
2 - Topper Motor
3 - Shredder Motor
4 - Crop Divider Motor
5 - Side Trim Knives Motor
6 - Transmission Motor
7 - Primary Extractor Hood Slew Motor
8 - Primary Extractor Motor
9 - Elevator Latching Motor
10 - Secondary Extractor Hood Slew Motor
11 - Secondary Extractor Motor
12 - Chopper Motor (2)

LOCATION OF CYLINDERS (A8000)

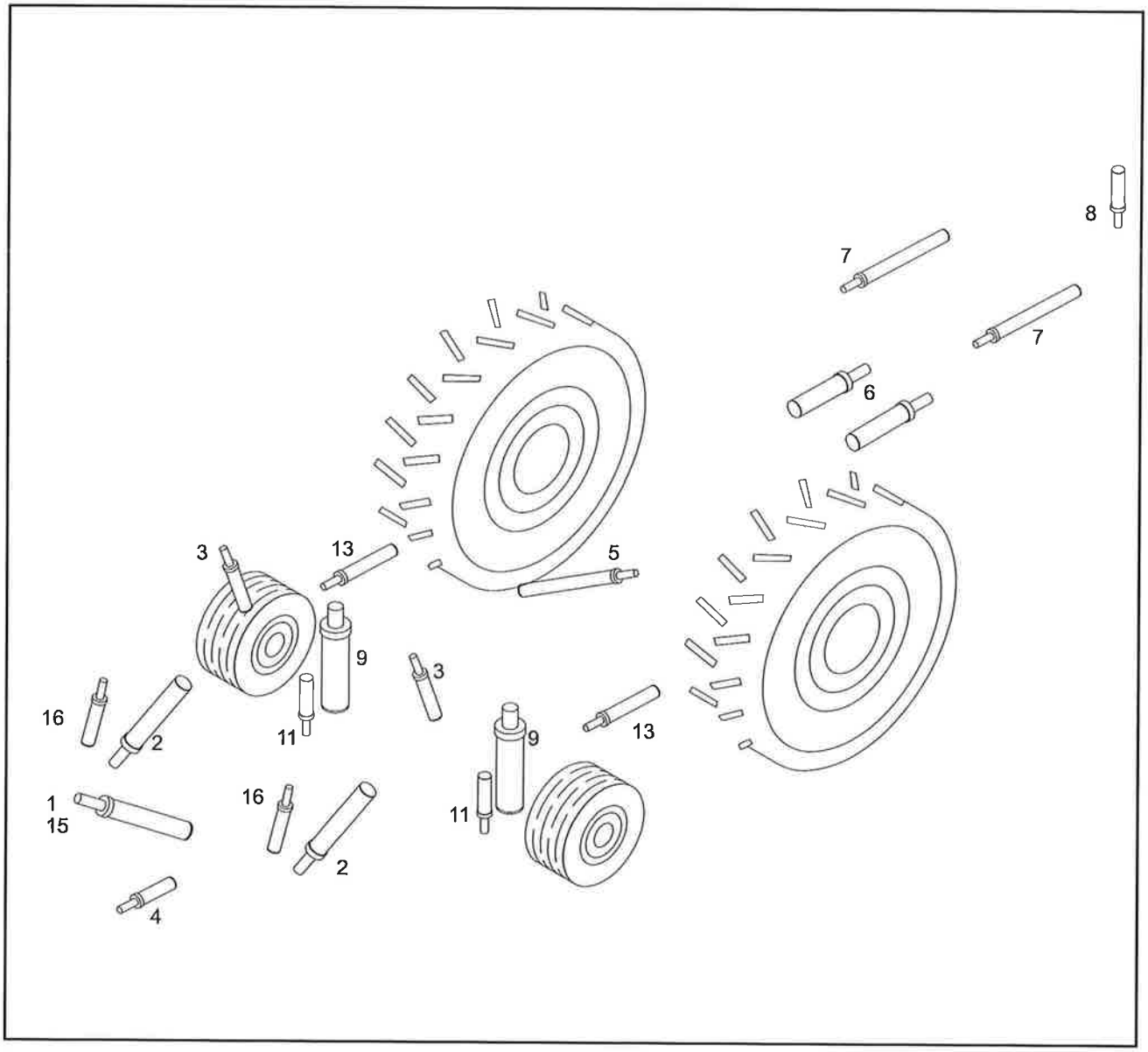

4

1 - Topper Arm
2 - Crop Divider Height
3 - Side Trim Knives Std/45°
4 - Knockdown Roller
5 - Cabin Tilt
6 - Elevator Slew
7 - Elevator Raise
8 - Extractor Bin Spreader Flap
9 - Basecutter Lift
11 - Height Indicator
13 - Steering Wheel
15 - Topper Adjustment EEC (Optional)
16 - Crop Divider Tilt Std/45°

LOCATION OF CYLINDERS (A8800)

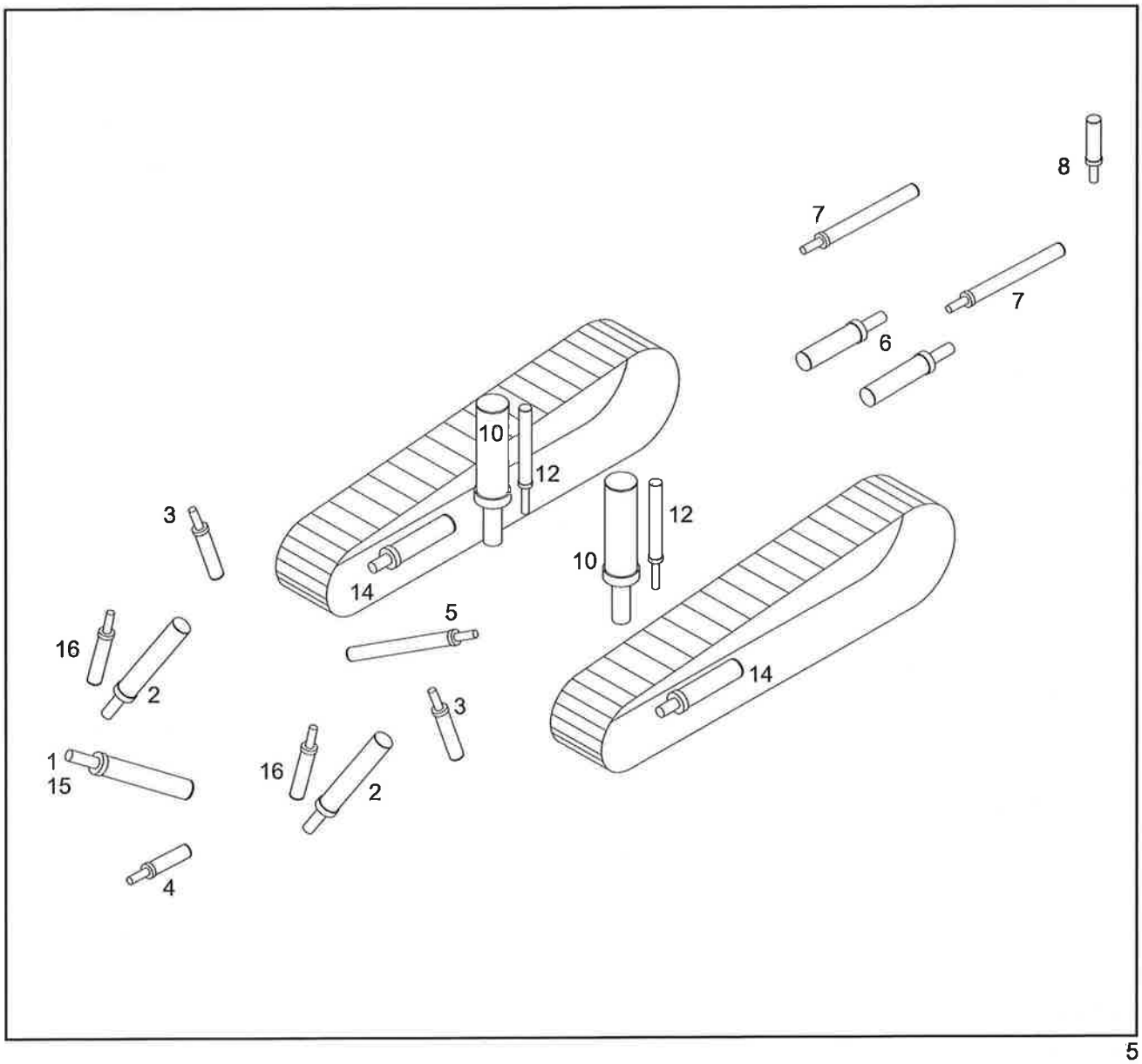

5

1 - Topper Arm
2 - Crop Divider Height
3 - Side Trim Knives Std/45°
4 - Knockdown Roller
5 - Cabin Tilt
6 - Elevator Slew
7 - Elevator Raise
8 - Extractor Bin Spreader Flap
10 - Basecutter Lift
12 - Height Indicator
14 - Track Adjustment
15 - Topper Adjustment EEC (Optional)
16 - Crop DividerTilt Std/45°

COMPONENTS SPECIFICATIONS

TOPPER

Oil supply ..... Receives oil from the 1st (1 3/4") section of the flow divider (cabin left side)

Flow ..... 21 gpm (79.5 liters/min.)

Relief pressure ..... 2650 psi (182.7 bar)

SHREDDER

Oil supply ..... Receives oil from the 1st (1 3/4") and 2nd (1") sections of the flow divider (cabin left side)

Flow ..... 33 gpm (125 liters/min.)

Relief pressure ..... 2650 psi (196.5 bar)

SIDE TRIM KNIVES

Oil supply
- If equipped with topper ..... Receives oil from the 2nd (1") section of the flow divider (cabin left side)
- If equipped with shredder ..... Receives oil from the 1st (1 3/4") and 2nd (1") sections of the flow divider (cabin left side)

Flow
- If equipped with topper ..... 12 gpm (45.4 liters/min.)
- If equipped with shredder ..... 33 gpm (125 liters/min.)

Relief pressure ..... 2850 psi (196.5 bar)

BASECUTTER

Oil supply ..... Receives oil from the lower triple pump through the 2nd section

Flow ..... 82 gpm (310.4 liters/min.)

Relief pressure ..... 2500 psi (172.3 bar)

CROP DIVIDERS

Oil supply ..... Receives oil from the 2nd section of the basecutter M51 motor

Flow ..... 19 gpm (72 liters/min.)

Relief pressure (BA 66) ..... 2500 psi (172.3 bar)

BUTTLIFTER ROLLER AND FIXED ROLLER

Oil supply ..... Receives oil from the 4th section of the basecutter M51 motor

Flow ..... 19 gpm (72 liters/min.)

Relief pressure (BA 66) ..... 2500 psi (172.3 bar)

CHOPPER DRUMS

Oil supply ..... Receives oil from the central tripe pump through the 1st and 2nd sections

Flow ..... 102 gpm (386 liters/min.)

Relief pressure ..... 2750 ± 100 psi (189.6 ± 6.9 bar)

ROLLERS TRAIN

Oil supply ..... Receives oil from the 3rd section of the flow divider of the chopper oulet
Flow ..... 31.4 gpm (119 liters/min.)
Relief pressure (Valvistor) ..... 2200 ± 100 psi (151.7 ± 6.9 bar)

KNOCKDOWN, FINNED (FEEDER) AND 1ST/2ND FLOATING ROLLERS

Oil supply ..... Receives oil from the 2nd section of the flow divider of the chopper oulet
Flow ..... 31.4 gpm (119 liters/min.)
Relief pressure (BA 66) ..... 2500 psi (172.3 bar)

PRIMARY EXTRACTOR

Oil supply ..... Receives oil from the 1st section of the lower triple pump
Flow ..... 45 gpm (170.3 liters/min.)
Relief pressure ..... 3500 psi (241 bar)

ELEVATOR

Oil supply ..... Receives oil from the 3rd section of the central triple pump
Relief pressure of the elevator latching ..... 2000 psi (138 bar)
Sequence valve pressure ..... 1750 psi (120.6 bar)
Relief pressure of the secondary extractor ..... 2500 psi (172.3 bar)

CYLINDERS CONTROL

Oil supply ..... Receives oil from the 3rd section of the flow divider
Flow ..... 12 gpm (45.4 liters/min.)
Relief pressure of the control ..... 2200 psi (151.7 bar)
Relief pressure of basecutter counterbalance ..... 2800 psi (193 bar)
Relief pressure of elevator slew counterbalance ..... 2100 psi (144.8 bar)
Relief pressure of crop dividers counterbalance ..... 2100 psi (144.8 bar)
Relief pressure of topper counterbalance ..... 2100 psi (144.8 bar)
Relief pressure of track valve (A8800) ..... 2500 psi (172.3 bar)
Relief pressure of auxiliary control ..... 2200 psi (151.7 bar)
Pressure of the steering priority valve (A8000) ..... 2500 psi (172.3 bar)

TRANSMISSION AND BRAKE

Low pressure relief pressure of the charge pump ..... 330 ± 25 psi (22.7 ± 1.7 bar)
Low pressure relief pressure of the motor manifold block ..... 270 ± 25 psi (18.6 ± 1.7 bar)
High pressure relief pressure ..... 6500 +250 /-100 psi (448 + 17.2 / - 6.9 bar)
IPOR ..... 5300 ± 100 psi (365.4 ± 6.9 bar)

HYDRAULIC FILTERS

Transmission pump suction ..... 10 nominal microns
Hydraulic tank suction ..... 149 nominal microns
Hydraulic tank return ..... 10 absolute microns

REDUCTION HUB (Until chasis A880080)

Oil specification ..... Gear 135 H EP (85 W 140) - SAE 85W140
Capacity ..... 6 liters

REDUCTION HUB (From chasis A880081)

Oil specification ..... Gear 135 H EP (85 W 140) - SAE 85W140
Capacity ..... 3.6 liters ± 10%

BASECUTTER

Oil specification ..... Gear 135 H EP - SAE 85W140
Capacidade ..... 9.5 liters

PUMP DRIVE GEARBOX

Oil specification ..... AW Hidraulic Fluid 100 - ISO 100
Capacity ..... 1.6 liters

CHOPPERS GEARBOX

Oil specification ..... Gear 135 H EP - SAE 85W140
Capacity ..... 7.5 liters

HYDRAULIC SYSTEM

Oil specification ..... AW Hidraulic Fluid 100 - ISO 100
Capacity ..... 600 liters

GREASE APPLICATION POINTS

Oil specification ..... MULTI-PURPOSE GREASE 251 H EP

AUTOTRACKER TANK

Oil specification ..... TCH FLUID
Capacity ..... 0.5 liter (tank) /
..... A8800 (Narrow front) 0.9 liters /
..... A8800 (Wide front) 0.3 liters / A8000 0.2 liters

HYDRAULIC SYSTEM CONNECTIONS - TORQUE SPECIFICATIONS

Conection Diameter	Torque (Nm)
11/16"	30
7/8"	55
1"	90
1 1/16"	110
1 ¼"	110
1 ½"	145
1 5/8"	200
2"	190

OIL SPECIFICATIONS

The following specification refers to petroleum-based hydraulic oil, containing additives designed to improve its anticorrosive, anti-oxidizing, anti-wear, anti-foaming characteristics and its viscosity rate.

If the oil meets the following specifications, it will be suitable to be used in the Case IH Austoft Harvesters hydraulic systems.

Factory shipment oil - AKCELA AW HYDRAULIC 100.

Physical properties

Appearance ..... Clean and brighter

Density at 15°C (IP160) ..... 0.880 - 0.890 (Typical: 0,882)

Viscosity at 40° C (104° F) cSt (IP71): ..... 66 - 100

Viscosity at 100° C (212° F) cSt (IP71): ..... Minimum 11

Viscosity at maximum working temperature ..... Minimum 13

Viscosity Index (IP 226) ..... Minimum 150

(%) of mass of Alkyl Zinc 0.04

Aniline Point °C (IP 2) ..... Minimum 100

Emulsibility (ISO 68 Grade - ASTM D1401) ..... 40/37/3 (30) at 54°C (129.2° F)

Emulsibility (ISO 100 Grade - ASTM D1401) ..... 40/37/3 (30) at 82°C (179.6° F)

Filterability (TP-02100) ..... Approved

Corrosion Protection (ASTM D665): ..... Approved - Distilled water

Stability to rust ..... Approved - synthetic salt water

250 hours at least at 2.0 mg KOH/gm ..... ASTM D943

Pour Point °C (IP 15) ..... Maximum - 35

Flash Point °C (IP 35) ..... 218 closed cup (IP34)°C
226 minimum opening (IP35)°C

Ignition Point °C (IP 35) ..... Minimum 246

Air Release (IP 313) ..... Maximum 660 seconds

Viscosity after 1000 hours - K at 100°C (212° F) ..... Minimum 10.5 cSt

TOPPER, SHREDDER AND SIDE TRIM KNIFE CIRCUIT

Topper Circuit without Side Trim Knife

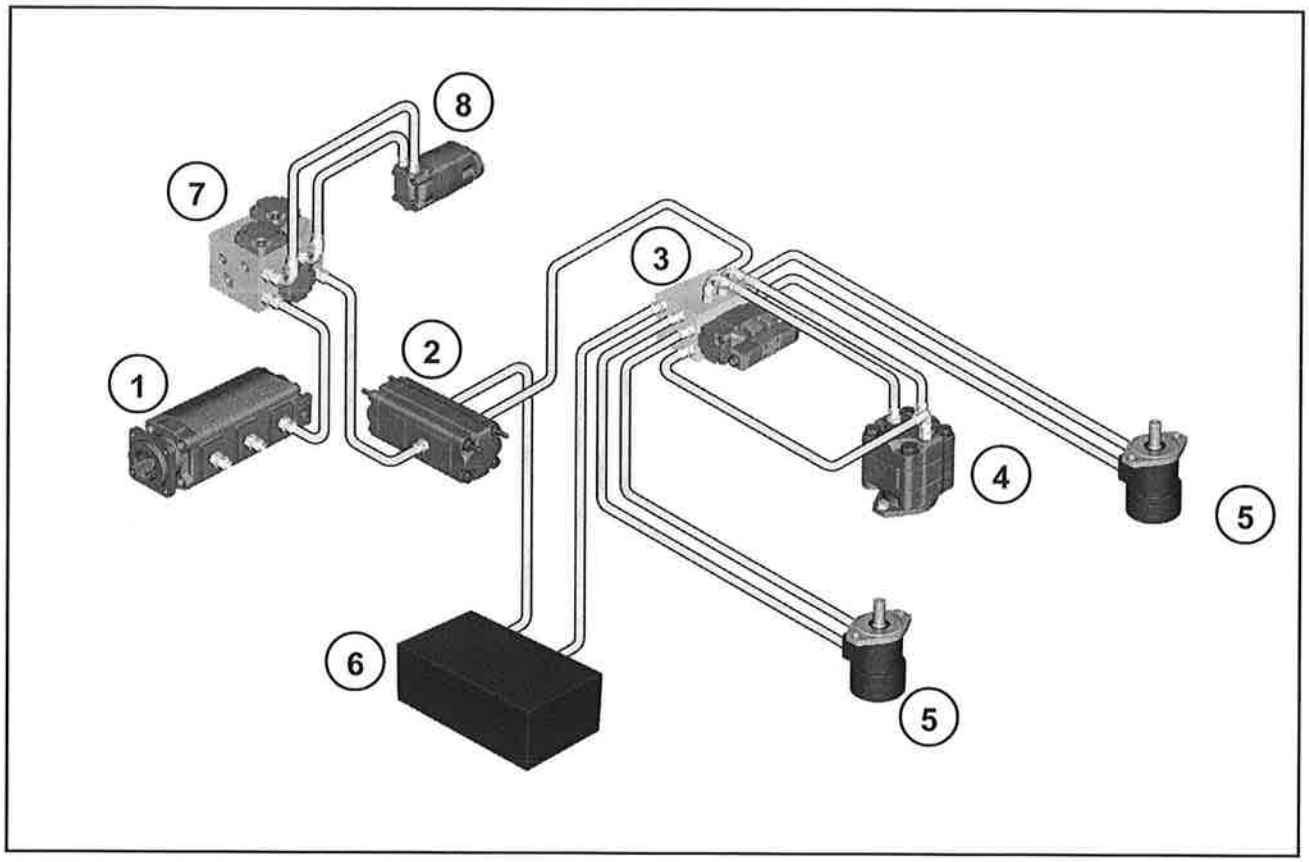

1 - P365 Pump (lower)
2 - Flow Divider
3 - Topper Manifold Block
4 - Topper M31 Motor
5 - Char-Lynn 14s Motor (Topper Gathering)
6 - Tank
7 - Cooling package manifold block
8 - Cooling package hydraulic fan motor

6

DESCRIPTION

With the system in neutral, the P365 pump (lower), through its third section, sends 45 gpm (170.3 liters/ min.) of oil to the manifold block of the cooling package, which in turn directs the oil to the cooling package fan motor. The oil return goes to the flow divider which directs 21 gpm (79.5 liters/min.) through the section 3 (1 3/4") from the divider to the topper manifold block, which in turn directs the oil to the hydraulic tank reservoir.

When activating the topper, the block closes the passage to the tank and directs the oil flow to the topper M31 motor. For the gathering drums's Char-Lynn 14s motors, the oil return flows through the block and is directed to the tank.

NOTE: *On machines equipped with rotating screen, the oil supplied by the P365 pump follows directly to the flow divider.*

Shredder Circuit without Side Trim Knife

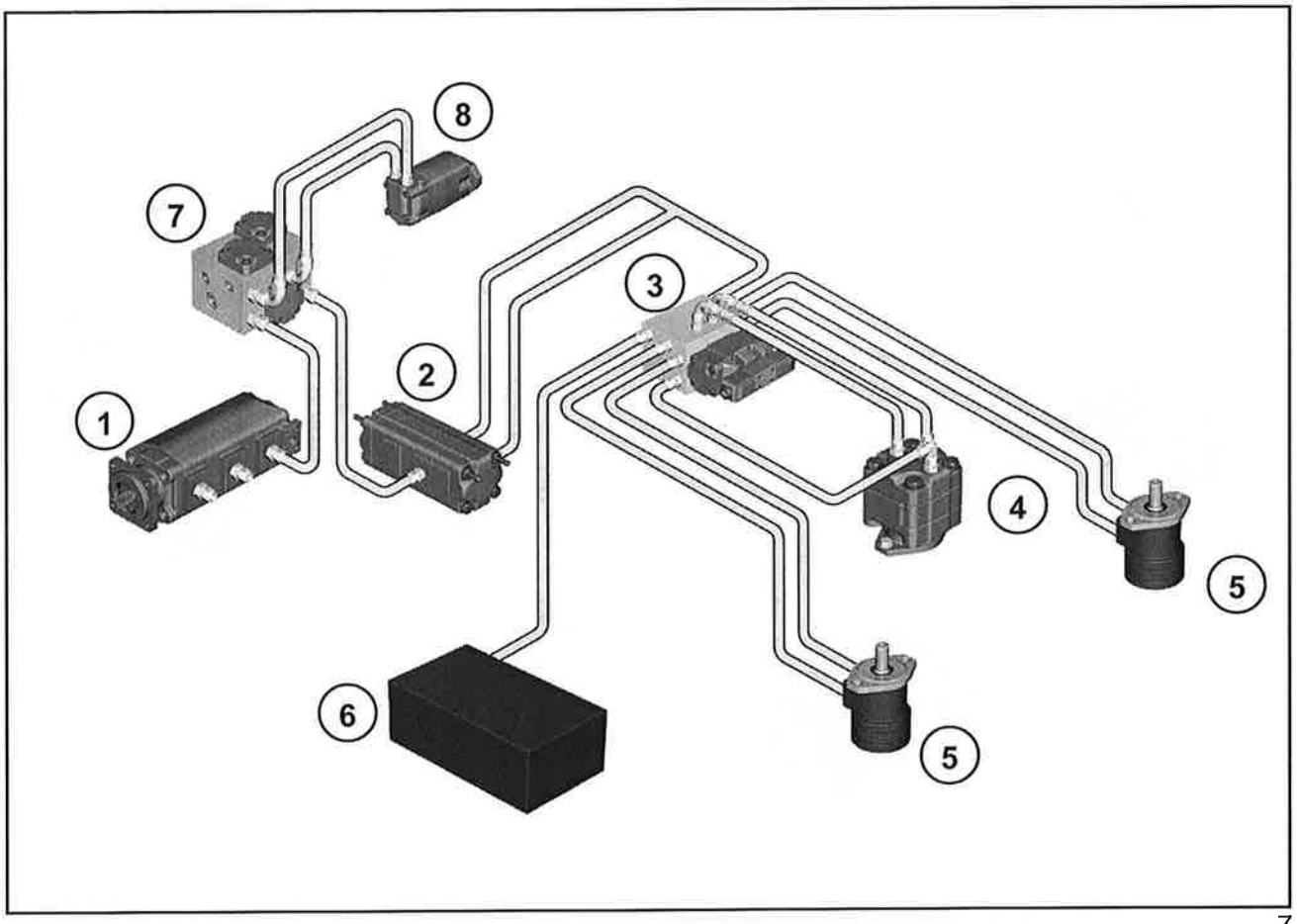

7

1 - P365 Pump (lower)
2 - Flow Divider
3 - Shredder Manifold Block
4 - Shredder M50 Motor
5 - Char-Lynn 14s Motor (Topper Gathering)
6 - Tank
7 - Cooling package manifold block
8 - Cooling package hydraulic fan motor

DESCRIPTION

With the system in neutral, the P365 pump (lower), through its third section, sends 45 gpm (170.3 liters/ min.) of oil to the manifold block of the cooling package, which in turn directs the oil to the cooling package fan motor. The oil return goes to the flow divider which directs 12 gpm (45.4 liters/min.) through the section 2 (1") and 21 gpm (79.5 liters/min.) through the section 3 (1 3/4") both from the divider to the topper manifold block, which in turn directs the oil to the hydraulic tank reservoir.

In activating the shredder, the block closes the direct passage to the tank and directs the oil flow to the shredder hydraulic motors supply. After the supplying, the oil returns to the block and is directed to the tank reservoir.

NOTE: *On machines equipped with rotating screen, the oil supplied by the P365 pump follows directly to the flow divider.*

Topper Circuit with Side Trim Knife

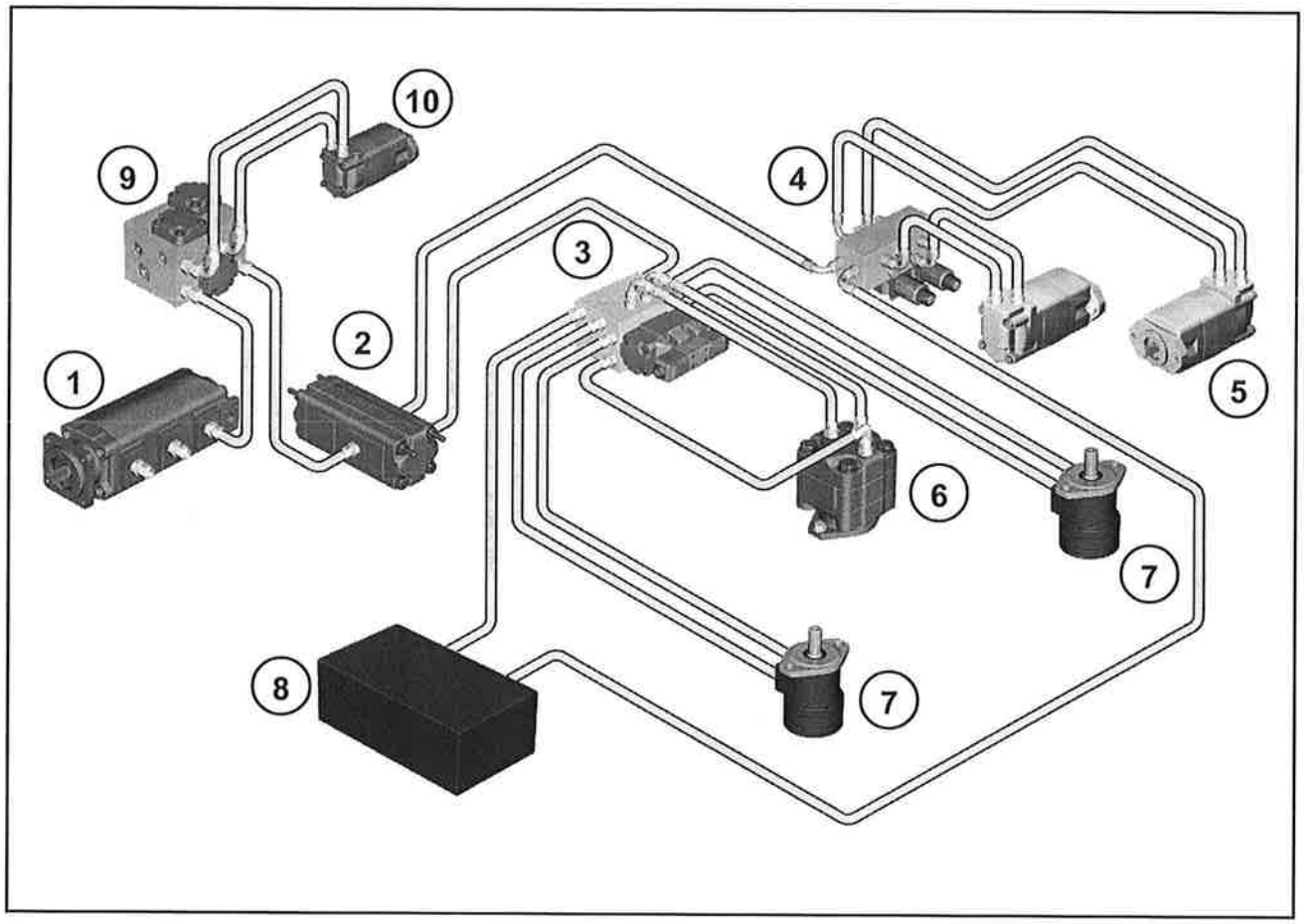

1 - P365 Pump (lower)
2 - Flow Divider
3 - Topper Manifold Block
4 - Vickers Control Side Trim Knife
5 - Side Trim Knife Motor
6 - Topper M31 Motor
7 - Char-Lynn 14s Motor (Topper Gathering)
8 - Tank
9 - Cooling package manifold block
10 - Cooling package hydraulic fan motor

8

DESCRIPTION

With the system in neutral, the P365 pump (lower), through its third section, sends 45 gpm (170.3 liters/ min.) of oil to the manifold block of the cooling package, which in turn directs the oil to the cooling package fan motor. The oil return goes to the flow divider which directs 21 gpm (79.5 liters/min.) through the section 3 (1 3/4") from the divider to the topper manifold block and 12 gpm (45.4 liters/min.) through the section 2 (1") from the divider to the side trim disk manifold block. Both manifold blocks direct the returning oil to the hydraulic tank reservoir.

When activating the implements (side trim and/or topper), the block closes the direct passage to the tank and directs the oil to the hydraulic motors supply. After the supplying, the oil returns to the blocks, which direct it to the tank.

NOTE: *On machines equipped with rotating screen, the oil supplied by the P365 pump follows directly to the flow divider.*

Shredder Circuit with Side Trim Knife

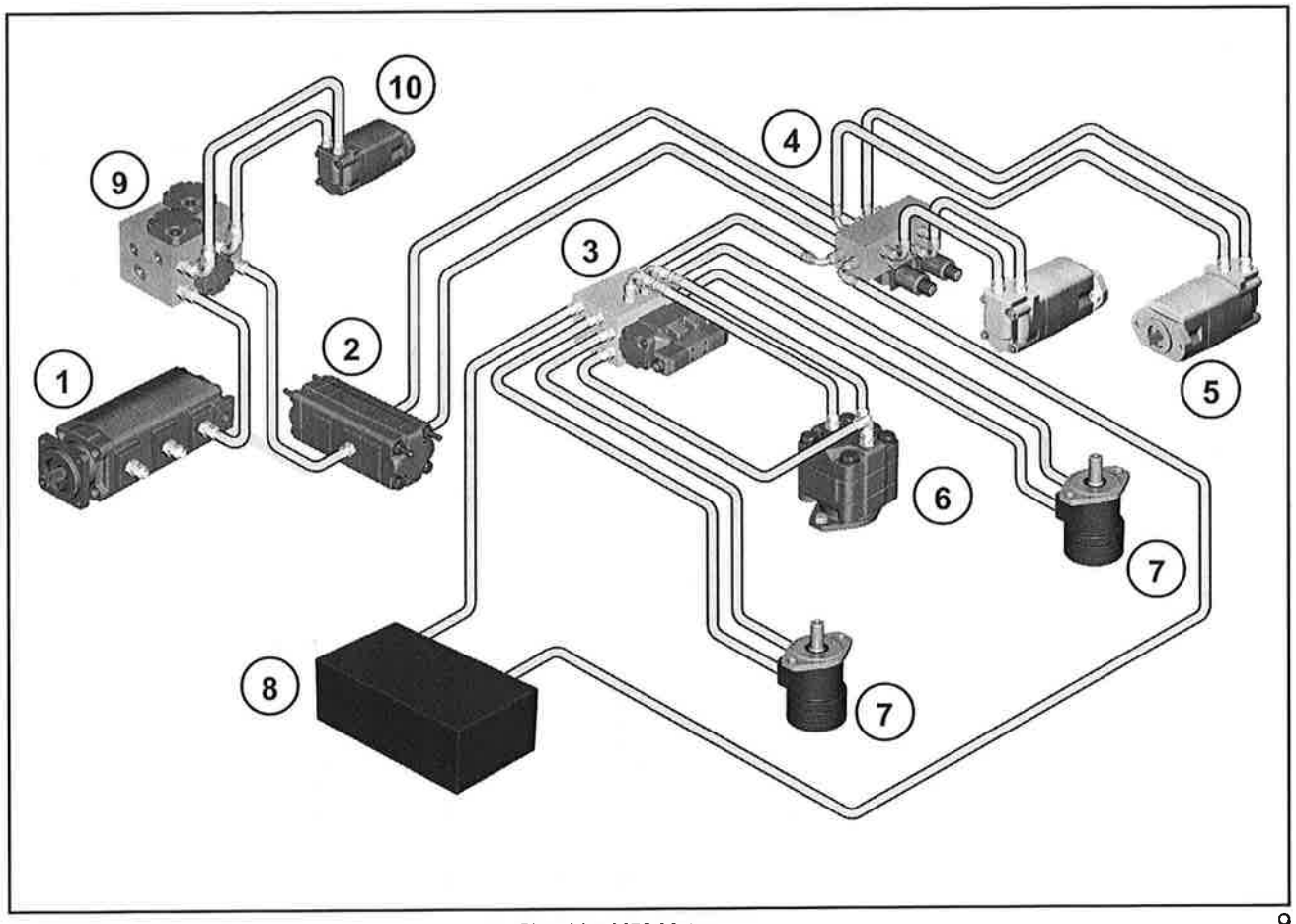

9

1 - P365 Pump (lower)
2 - Flow Divider
3 - Shredder Manifold Block
4 - Vickers Control Side Trim Knife
5 - Side Trim Knife Motor
6 - Shredder M50 Motor
7 - Char-Lynn 14s Motor (Topper Gathering)
8 - Tank
9 - Cooling package manifold block
10 - Cooling package hydraulic fan motor

DESCRIPTION

With the system in neutral, the P365 pump (lower), through its third section, sends 45 gpm (170.3 liters/ min.) of oil to the manifold block of the cooling package, which in turn directs the oil to the cooling package fan motor. The oil return goes to the flow divider which directs 12 gpm (45.4 liters/min.) through the section 2 (1") and 21 gpm (79.5 liters/min.) through the section 3 (1 3/4") both from the divider to the side trim disk manifold block, which in turn sends 33 gpm (125 litros/min.) to the shredder manifold block. Both manifold blocks direct the returning oil to the hydraulic tank reservoir.

In activating the implements (side trim / shredder), the side trim knife block directs part of the oil to activate the side trim motors, and part to activate the shredder. The volume of oil directed to the side trim motors returns to the side trim block, where it joins to the oil that is going to the shredder.

NOTE: *On machines equipped with rotating screen, the oil supplied by the P365 pump follows directly to the flow divider.*

OPERATION OF THE TOPPER / SHREDDER MANIFOLD BLOCK

In neutral, the valves (7 and 8) are centrally open, which allows the oil flow to the tank. The restrictor (5) is located in this line, and it restricts the flow, generating an increase in the pressure. This allows the relief valve (4) to open and deviate all the flow to the tank.

To operate it, the topper solenoid valves (7 and 8) are activated. This supplies pilot pressure to the valve (10) that directs the oil to the side trim knives (left and right) and to the gathering disks.

The check valve (2) allows the pressure build up between the ports of the trim knives and the gathering disks to the relief valve (4). The check valve (3) allows the gathering disks to operate or rotate after the circuit is set to neutral, in order to avoid cavitation.

Topper Circuit

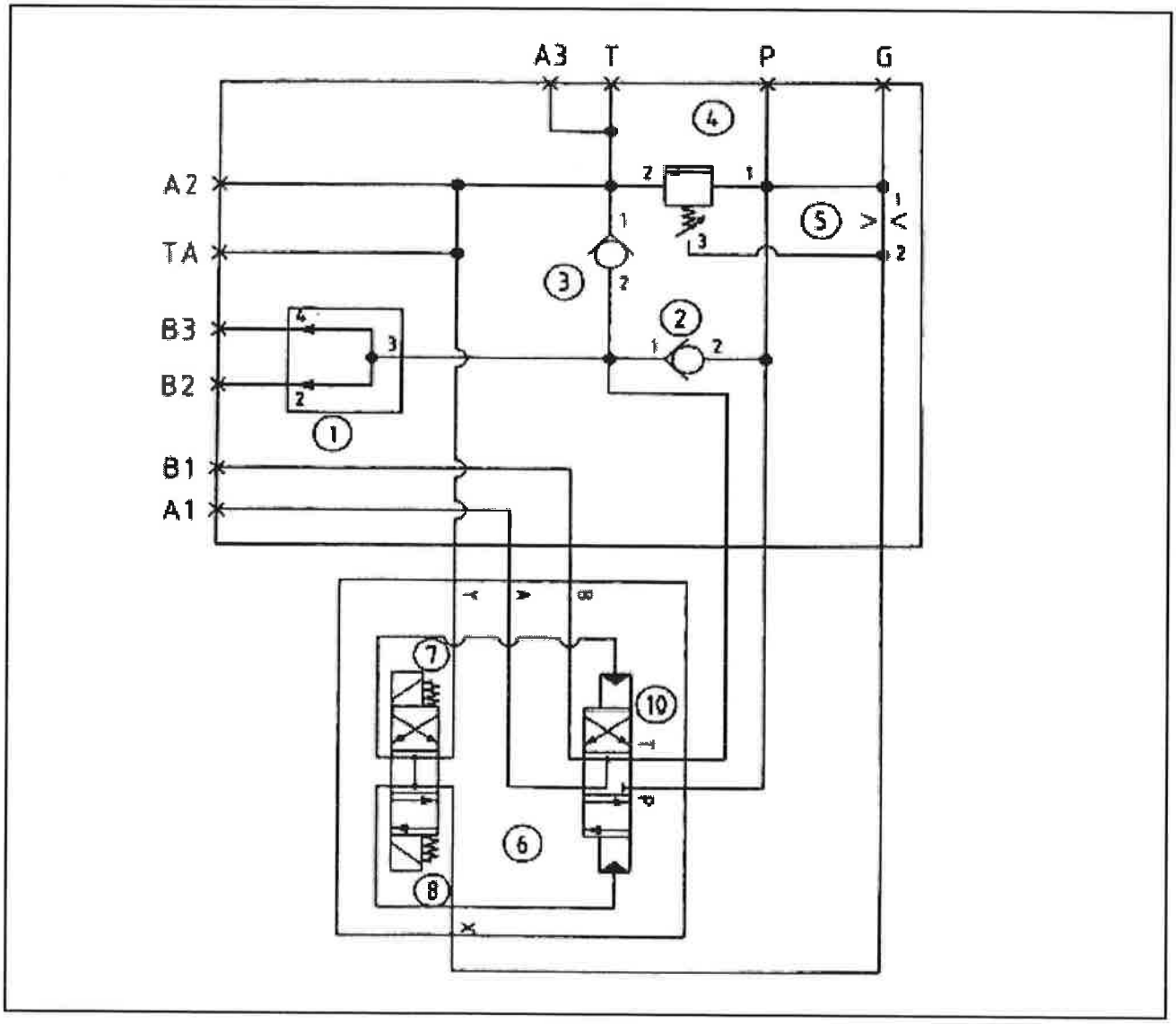

10

OPERATION OF THE SIDE TRIM KNIFE MANIFOLD BLOCK

In neutral, the valves (1 and 2) are centrally open, which allows the oil flow to the tank.

For the operation, the valves (1 and 2) are activated, which releases the oil flow to the side trim motors.

In the case a locking occurs in the motors, the relief valves (3 and 4) open, directing the oil to the tank.

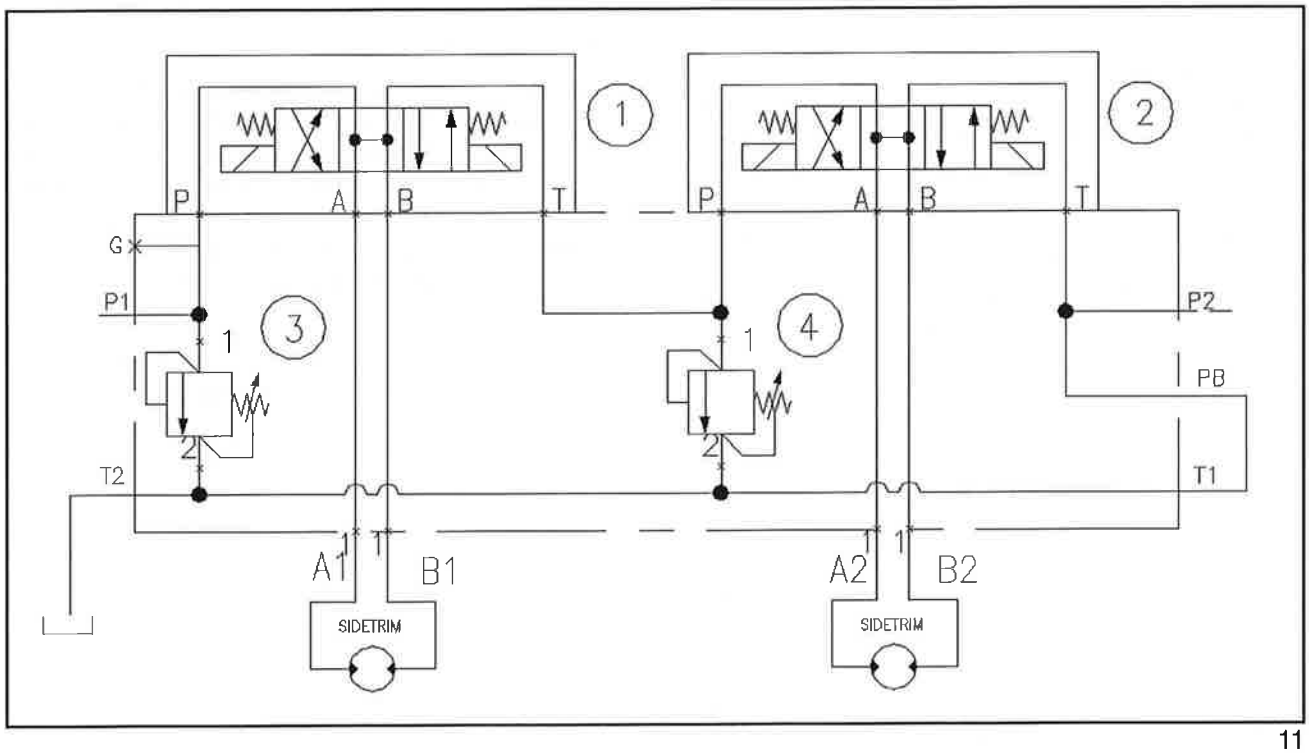

11

FAN DRIVE MANIFOLD BLOCK OPERATION

To rotate the fan in the cooling direction, the oil enters the fan drive manifold block through P, passes through the directional valve EV1, drives the hydraulic motor through MA, returns through MB, passes through the directional valve EV4 and then goes through T to the flow divider. In this driving mode, the pilot line from EV1 passes through the solenoid valve SV1 (from 4 to 1) and diverts to T. The oil flows through the pilot valve EV3, following through the check valve CV5.

To rotate the fan in the radiator and fixed screen cleaning direction, electrically actuate the valve SV1, the oil comes into the fan drive manifold block through P, passes through the directional valve EV2, drives the hydraulic motor through MB, returns through MA, passes through the directional valve EV3 and then follows through T to the flow divider. In this driving mode, the pilot line from EV2 passes through SV1 (from 2 to 1) and diverts to T. The oil then passes through the pilot valve EV4, following on through the check valve CV6.

The hydraulic motor driving ramp is given by the oil flowing through CV5 or CV5 following to the proportional valve TS1, which will gradually close the passage to T. The valves CV3 and CV4 operate together the valves EV3 and EV4 respectively and TS1 preventing them from being improperly actuated, due to the back pressure in the port T of the manifold block.

The positions of SV1 and TS1 are determined by electrical actuation, controlled and synchronized by the SCM software.

The valve TS1 also acts as a relief valve, piloting valves EV3 and EV4, in case of the differential pressure between either MA or MB, depending on the driving direction, and T to achieve 2000 PSI. The oil flows through pilot valves EV3 or EV4 and through CV5 or CV6 (respectively) reaching the valve TS1 which will act as a conventional relief valve, diverting to T.

Check valves CV1 and CV2 act as anti-cavitation valves as cavitation could occur due to fan inertia in atypical cases of inverting the rotation direction or lack of oil flow.

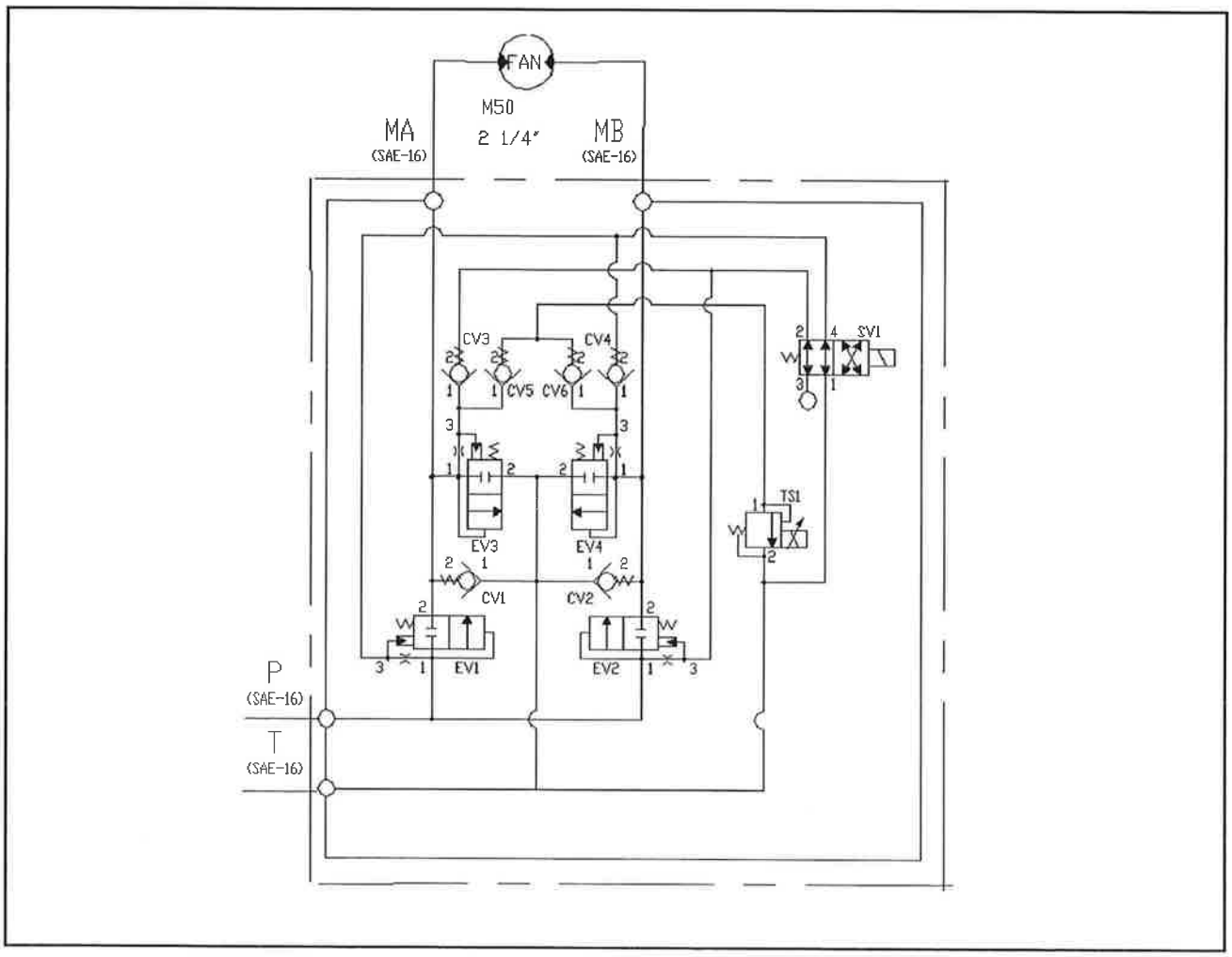

PROCEDURE FOR CHECKING THE COOLING PACKAGE HYDRAULIC FAN MANIFOLD BLOCK

Troubleshooting the manifold block of the cooling package for electrical and hydraulic problems

For troubleshooting, following conditions shoud be respected:

- Motor speed: 2100 RPM
- Minimum hydraulic oil temperature: 40ºC
- Thorough cleaning of instruments and connections to prevent oil contamination

NOTE: *The machine program initially actuates the fan in the cleaning direction, and then starts the cooling process. Pressure readings should be only considered when the system is stabilized in the cooling direction.*

Checking the P365 Pump assembly / Manifold block / Fan motor

Install a plug on the manifold block return line.

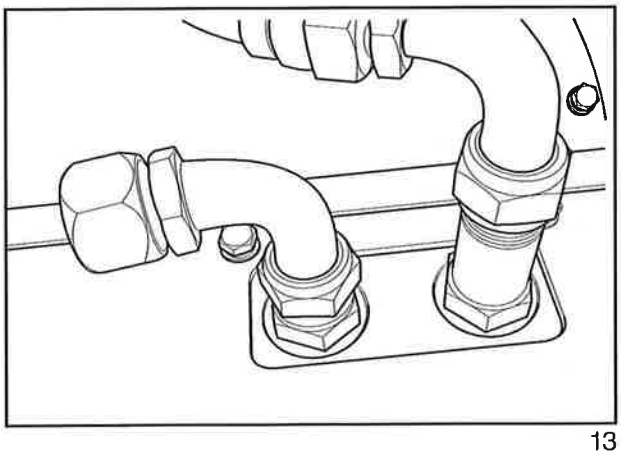

13

Install the manometer between the fan motor return hose and the cooling package manifold block and install a plug on the other end of the hose.

NOTE: *At this point the reading should be 2400 ± 100 PSI*

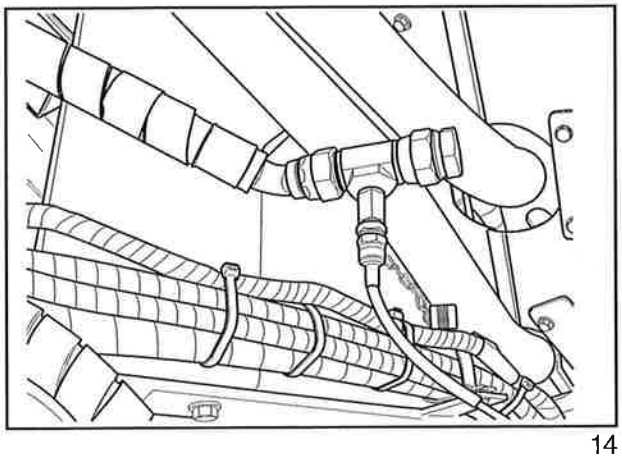

14

Pressure diagnostics in the manifold block

Install the manometer on the manifold block oil outlet to the motor.

NOTE: *At this point the reading should be 2450 ± 100 PSI*

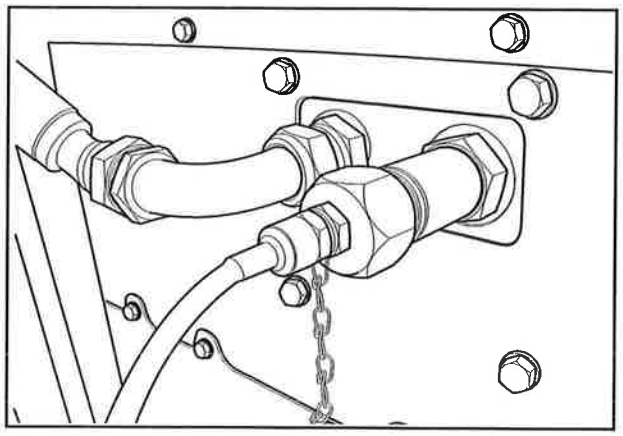

15

The relif valve is a sealed valve, i.e., it does not allow any adjustments. In case of founding troubles it must be replaced.

A simpler way of troubleshooting, is measuring the fan speed, which should be 1800 RPM when rotating in the cooling direction and with the motor speed at 2100 RPM.

Electrical diagnostics

- Fan in cooling direction

Coil SV1 (Smaller)

V: _____

A: _____

Time: _____

Coil PS1 (Larger)

V: _____

A: _____

Time: _____

- Fan in cleaning direction

Coil SV1 (Smaller)

V: _____

A: _____

Time: _____

Bobina PS1 (Larger)

V: _____

A: _____

Time: _____

- Fan in neutral

Coil SV1 (Smaller)

V: _____

A: _____

Time: _____

Coil PS1 (Larger)

V: _____

A: _____

Time: _____

CHECKING THE PRESSURE OF THE TOPPER AND SHREDDER CIRCUIT

Checking the R/H side trim relief and the L/H side trim main relief

- R/H side trim relief:

  Connect a 5000 psi (344.7 bars) pressure gauge in the test point of the side trim manifold block. Raise the L/H side trim relief valve (approximately half a turn).

  Stop the R/H side trim and adjust the R/H relief valve to 2850 psi (196.5 bars). Release the R/H side trim.

- L/R side trim main relief:

  Stop the L/H side trim and adjust the L/H main relief valve to 2850 psi (196.5 bars). Release the L/H side trim and remove the pressure gauge.

Relief valve adjustment: 2850 psi (196.5 bars)

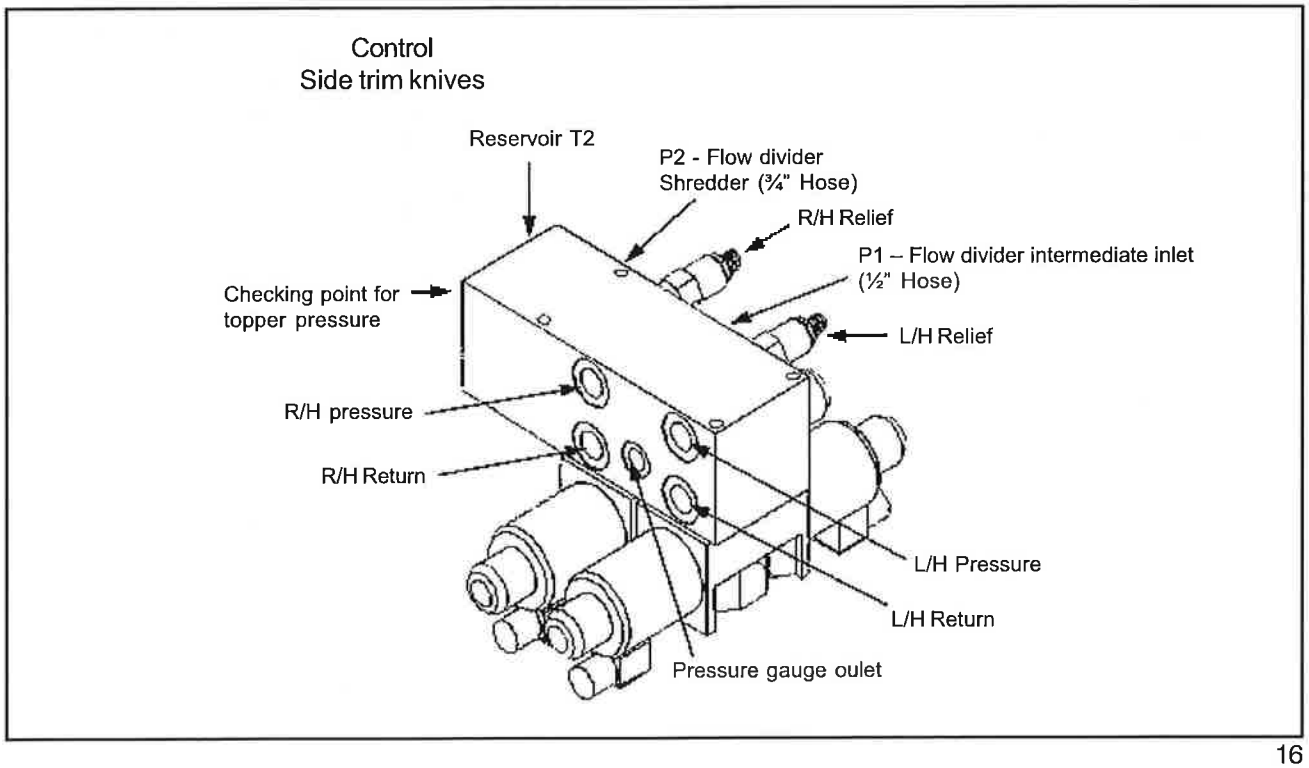

16

INSPECTION OF THE TOPPER RELIEF VALVE

Plug the topper manifold block forward and reverse hose to the drum/trim knife motor. Connect a 5000 psi (344.7 bars) pressure gauge in the test point of the topper block. Operate the topper and adjust the relief valve to 2650 psi (182.7 bars). Reconnect the drum trim knives motor hose to the valve block, and remove the pressure gauge.

NOTE: *If the correct pressure is not obtained, the main relieves and the working point relieves in the control section that provides oil to the topper manifold block must be checked.*

Relief valve adjustment: 2650 psi (182.7 bars)

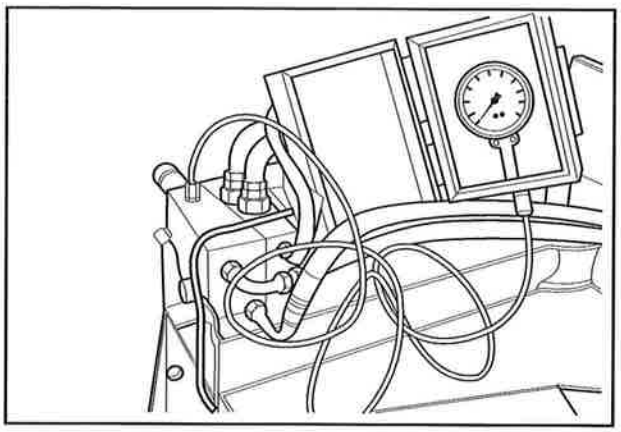

17

BASECUTTER, CROP DIVIDERS, BUTTLIFTER ROLLER AND FIXED ROLLER CIRCUIT

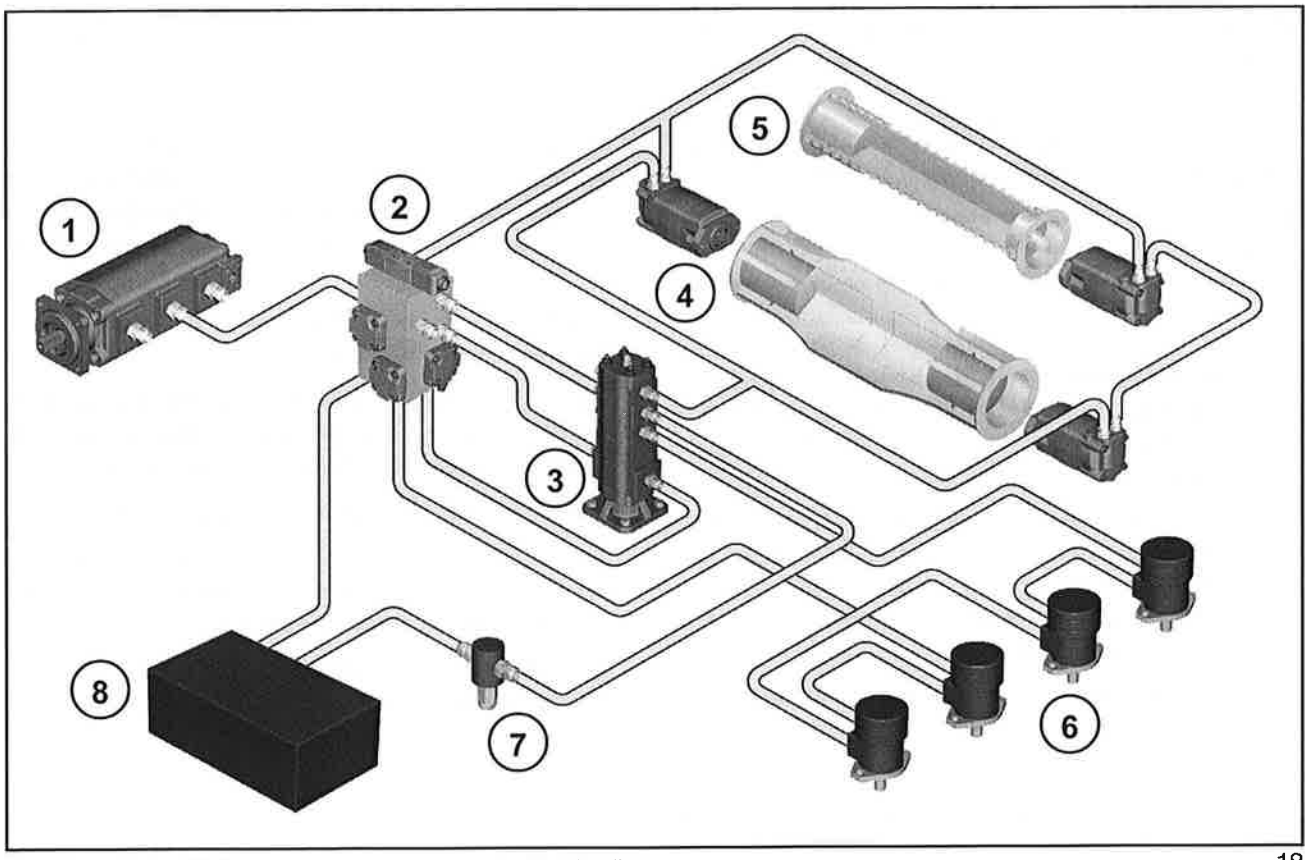

18

1 - P365 Pump (lower)
2 - Basecutter Block
3 - M51 Motor
4 - Buttlifter Roller
5 - Fixed Roller
6 - Char-Lynn Motor (Crop Divider)
7 - BA66 Valve
8 - Tank

DESCRIPTION

With the system in neutral, the P365 triple pump (lower), through the second section, sends 82 gpm (310.4 liters/min.) of oil to the basecutter manifold block, which sends the oil to the hydraulic tank.

When the harvesting functions are activated, the basecutter closes the passage to the tank and releases the oil flow to the M51 motor, which after being started sends oil flow to:

- First section (2 1/2"): Oil return to the tank
- Second section (1"): Crop Divider, respecting the following starting sequence:
  - Left "external" crop divider
  - Left "internal" crop divider
  - Right "external" crop divider
  - Right "internal" crop divider
- Third section: Supplies the BA66 valve
- Fourth section (1"): Supplies the buttlifter roller and the first fixed roller.

OPERATION OF THE BASECUTTER MANIFOLD CONTROL BLOCK

In neutral: In neutral position, the oil enters into the manifold block through ports P1 and P2, and returns to the tank through the opening T.

All the logical elements / cartridges 1.1, 1.2, 2.1, 2.2 and 3 open and allow a free flow to the tank.

The check valve 4.1 is provided to open a pilot section of the logical elements / cartridge 3 to the tank, in order to assure that it is opened in the neutral position.

Forward direction: When the basecutter circuit is activated to go forward with the harvest, the Cetop valve 5 pilot pressure will close the logical elements 2.1 and 2.2.

The oil flow will open the logical element 1.1 and it will flow outside the block, through ports A1 and A2, to the basecutter motor, to the buttlifter and first fixed rollers, and to the crop dividers, returning through ports B1, B2 and B3 of the block.

The logical element 1.2 is open and will allow the oil flow to return to the tank.

In reverse (backward): When the basecutter circuit is activated to go backward, the Cetop valve 5 pilot pressure will close the logical elements 1.1 and 1.2.

The oil flow will open the logical element 2.2 and it will flow outside the block, through ports B2 and B3, to the crop dividers, to the buttlifter and first fixed rollers, and to the basecutter motor, returning through ports A1 and A2.

The logical element 2.1 is opened and will allow the oil flow to return to the tank.

The check valve 6 and the flow restriction 12 restricts the flow to the opening B1 when running backwards, in order to supply flow to reverse the circuit.

The logical element 3 provides protection to the circuit.

The check valve 8 and the flow restriction 9 are assembled in order to prevent the relief valve section saturation of the logical element 3.

The selector valve 4.2 directs the higher pressure from the basecutter or choppers circuit system to the Cetop 5.

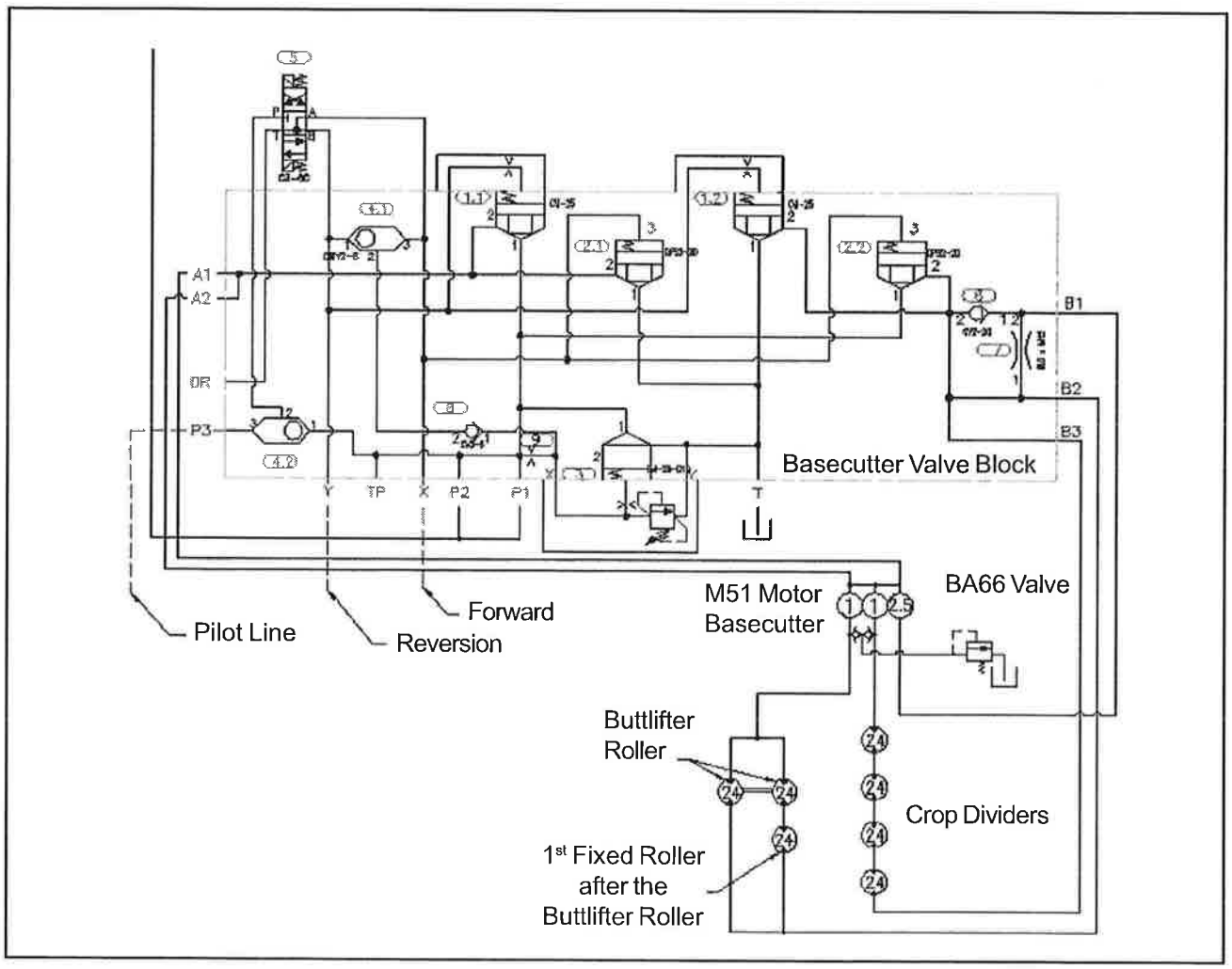

CHECKING THE FLOW OF BASECUTTER, CROP DIVIDERS, BUTTLIFTER ROLLER AND FIXED ROLLER CIRCUIT

To check the basecutter main relief valve

Connect a 5000 psi (344.7 bar) pressure gauge in the test point (1) located in the basecutter manifold block. Block the basecutter discs, and start the circuit to go forward. Adjust the main relief valve (2) to 2500 psi (172.3 bars).

Operate the key to the harvest direction.

Main relief valve fixed in 2500 psi (172.3 bar).

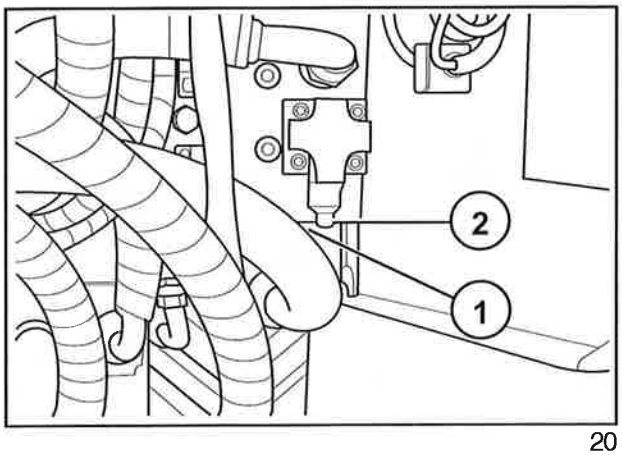

20

Checking the buttlifter roller, crop divider, chopper roller and the first floating roller relief valves

Connect a 5000 psi (344.7 bar) pressure gauge to the test point located in the relief valve (2) assembled in the harvester's right side. Raise the relief valve of the basecutter controller a quarter of a turn. Block the basecutter in reverse.

Operate the key to the reverse direction.

Put the harvester circuit in backward. Adjust the remote pressure relief valve (1) to 2500 psi (172.3 bars). Release the basecutter and adjust the circuit to the harvest direction. Readjust the main relief valve to 2500 psi (172.3 bars). Release the basecutter and remove the pressure gauge.

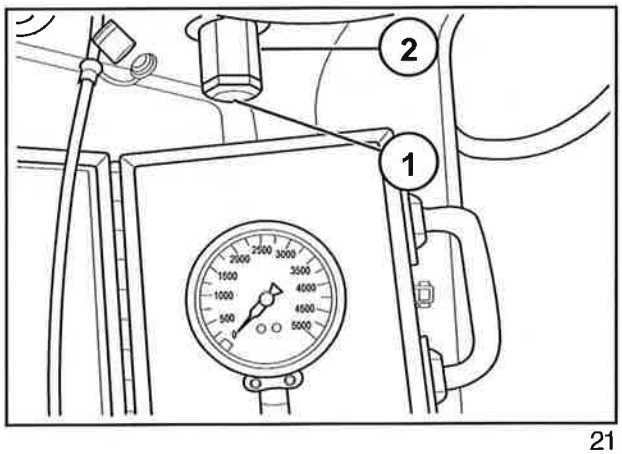

21

Adjust the main relief valve to 2500 psi (172.3 bars).

CHOPPER, FEED ROLLERS, KNOCKDOWN ROLLER AND THE FIRST AND SECOND FLOATING ROLLERS CIRCUIT

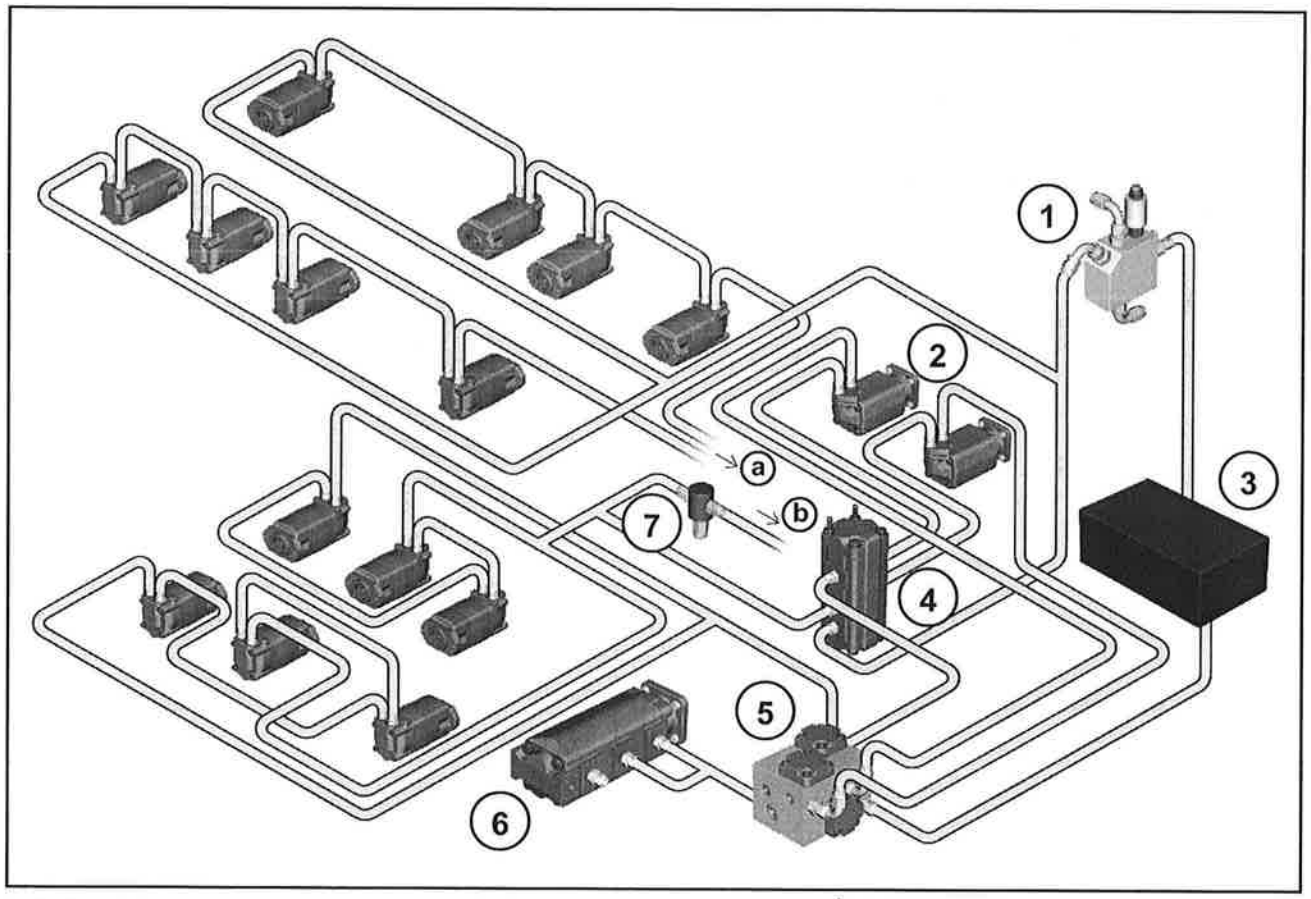

22

1 - Rollers Valve
2 - Chopper Motors
3 - Tank
4 - Flow Divider
5 - Manifold Block
6 - P365 Pump (Center)
7 - BA 66 Valve

a - to the Manifold Block
b - to the Tank

DESCRIPTION

With the system in neutral, the P365 triple pump (Center), through the first and second sections, sends 102 gpm (386 liters/ min.) of oil to the chopper manifold block, which sends the oil to the hydraulic tank.

When the chopper is operated, the block closes the passage to the tank and sends the oil to the chopper motors.

The return of the oil from the chopper motors follows to the flow divider, which will perform the following oil distribution:

- Section 1 (2 1/2") sends 39.2 gpm (148.4 liters/min.) to the chopper block, which will direct the oil to the tank.
- Section 2 (2") sends 31.4 gpm (119 liters/min.) to the finned (feeder) roller, the first and second floating rollers and the knockdown roller. After operating these rollers, the oil returns to the tank.
- Section 3 (2") sends 31.4 gpm (119 liters/min.) to the rollers train. After operating the rollers, the oil will return to the chopper block, which sends it to the tank.

The finned roller, knockdown roller, and the first and second floating rollers circuits are protected by the BA66 valve.

Connected between the chopper flow divider and the rollers train, there is a proportional flow control valve (Valvistor), which varies the quantity of oil supplied to the roller trains, specifying the rollers speed and, consequently, the billet length.

The valve is electronically controlled by a parameterized command in the monitor. A cartridge-type relief valve, assembled in the manifold block with the proportional flow control valve, protects the feed rollers from any excessive pressure build up in the cutting system.

Operation of the chopper manifold control block

In neutral: In neutral position, the oil enters into the manifold block through ports P1 and P2, and returns to the tank through the opening T.

All the logical elements / cartridges 1.1, 1.2, 2.1, 2.2 and 3 are opened and allow a free flow to the tank.

The check valve 4 is provided to open a pilot section of the logical elements / cartridge 3 to the tank, in order to assure that it is opened in the neutral position.

Harvest direction: When the chopper circuit is activated in the harvest direction, the basecutter circuit pilot pressure will close the logical elements 2.1 and 2.2.

The oil flow will open, then, the logical element 1.1, and will flow to outside the block through ports A to the chopper motor and to the feed rollers and will return through the block's ports B1, B2, and B3.

The logical element 1.2 is opened and allows the oil flow to return to the tank.

In reverse: When the chopper circuit is activated in the reverse direction, the basecutter circuit pilot pressure will close the logical elements 1.1 and 1.2.

The oil flow will open the logical element 2.2 and will flow outside the block through ports B to the feed rollers and to the chopper motors through ports A.

The logical element 2.1 is opened and allows the oil flow to return to the tank.

The logical element 3 provides protection to the circuit.

The check valve 8 and the flow restriction 5 are assembled in order to prevent the relief valve section saturation of the the logical element 3.

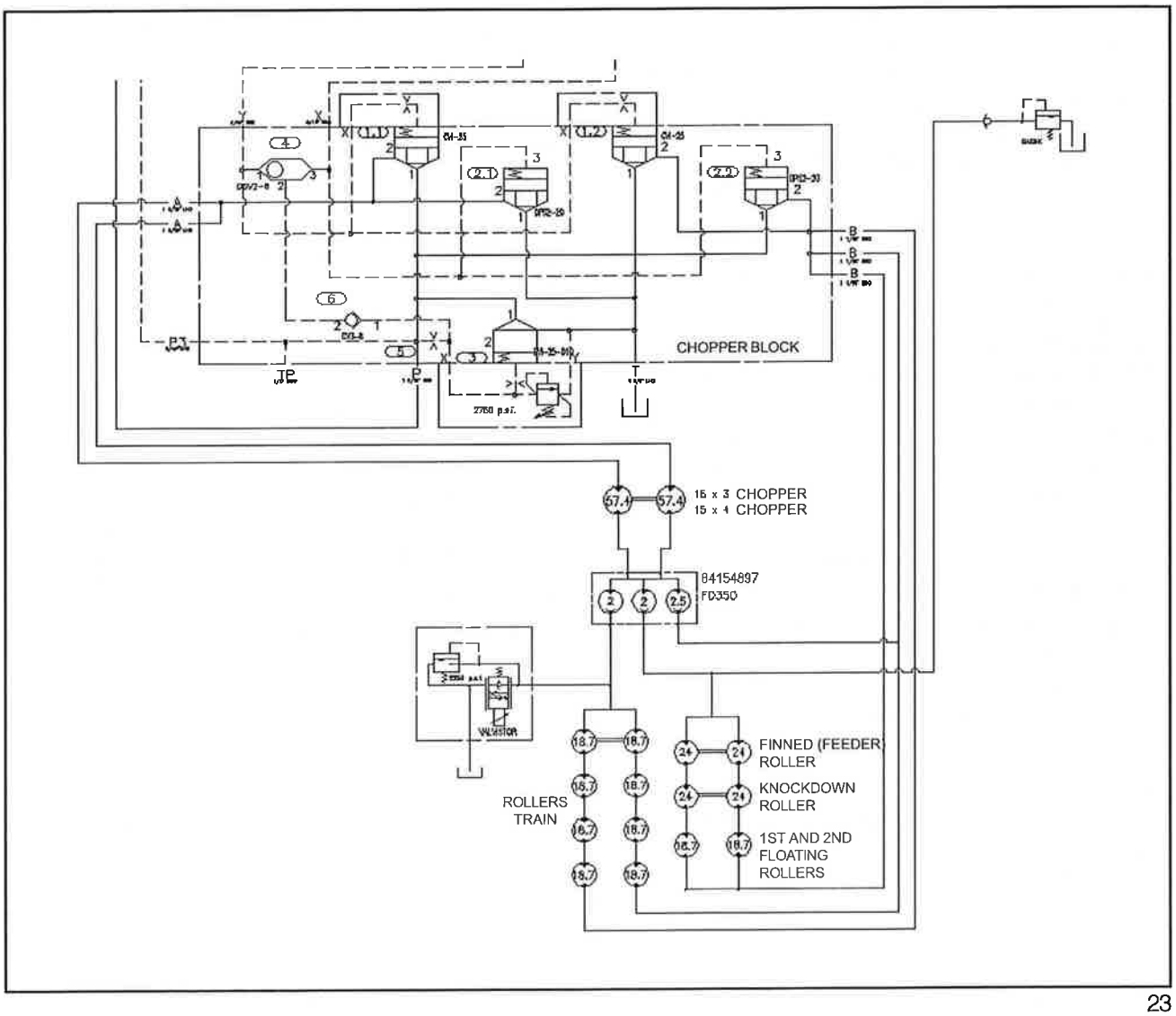

23

CHECKING THE PRESSURE OF THE CHOPPER, FEED ROLLERS, KNOCKDOWN ROLLER AND THE FIRST AND SECOND FLOATING ROLLERS CIRCUIT

Checking the chopper and upper feed rollers relief valves

NOTE: *Check if the billet length control is attached in long pieces during the pressure checking.*

To check the chopper circuit relief pressure, a 5000 psi (344.7 bars) pressure gauge must be installed in the test point of the chopper hydraulic block.

The chopper rollers must be locked in the harvest direction. Check the pressure obtained in the pressure gauge. The relief pressure must be 2750 ± 100 psi (189.6 ± 6.9 bars). In the cases in which the pressure is not within the specification, adjust the valve in the control. Tightening it increases the pressure, releasing the valve will decrease the pressure.

To adjust the rollers relief valve, proceed as follows:

- Connect the 5000 psi (344.7 bars) pressure gauge in the pressure test point in the rollers manifold block (block with the Valvistor valve). Block chopper rollers, loosen the chopper manifold block relief valve two turns, start the motor and wait the system to stabilize. Retighten the chopper manifold block relief valve two turns and, with the feeding system into the reverse, check the pressure reading in the manometer. The relief pressure is 2200 ± 100 psi (151.7 ± 6,9 bar).
- Unlock the chopper rollers and remove the pressure gauge.
- Connect a 5000 psi (344.7 bars) pressure gauge in the test point in the proportional flow control valve (Valvistor) block.
- Lock the chopper rollers in reverse and adjust the upper feed roller relief valve (Valvistor block) to 2200 ± 100 psi (151.7 ± 6.9 bar).
- Remove the pressure gauge from the test point in the Valvistor block and assemble it in the test point in the chopper control.
- Release the chopper roller from reverse and lock the chopper rollers in the harvest direction.
- Adjust the chopper control relief valve opening to 2750 ± 100 psi (186 ± 6.9 bar).
- Release the chopper roller and remove the pressure gauge.

  The bottom rollers are protected by the BA66K relief valve, assembled in the machine's left side, next to the return block.

NOTE: *There is a restrictor with a 1 mm hole located under the check valve of the chopper's valve block. If this restrictor is not installed, the choppers will rotate (slowly) when they are in neutral position.*

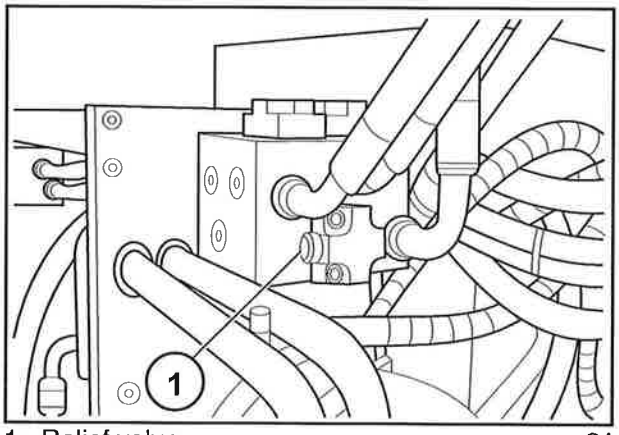

1 - Relief valve 24

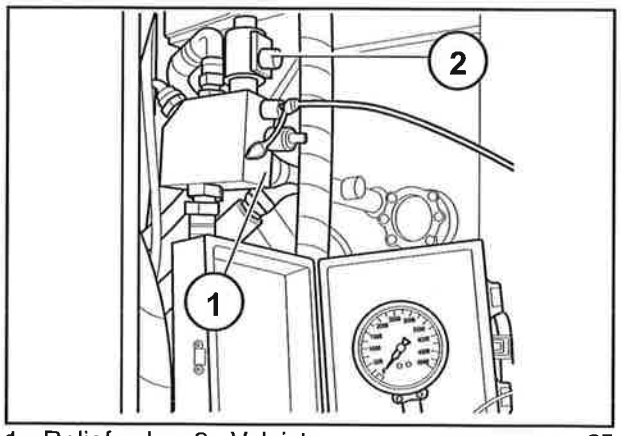

1 - Relief valve; 2 - Valvistor 25

PRIMARY EXTRACTOR CIRCUIT

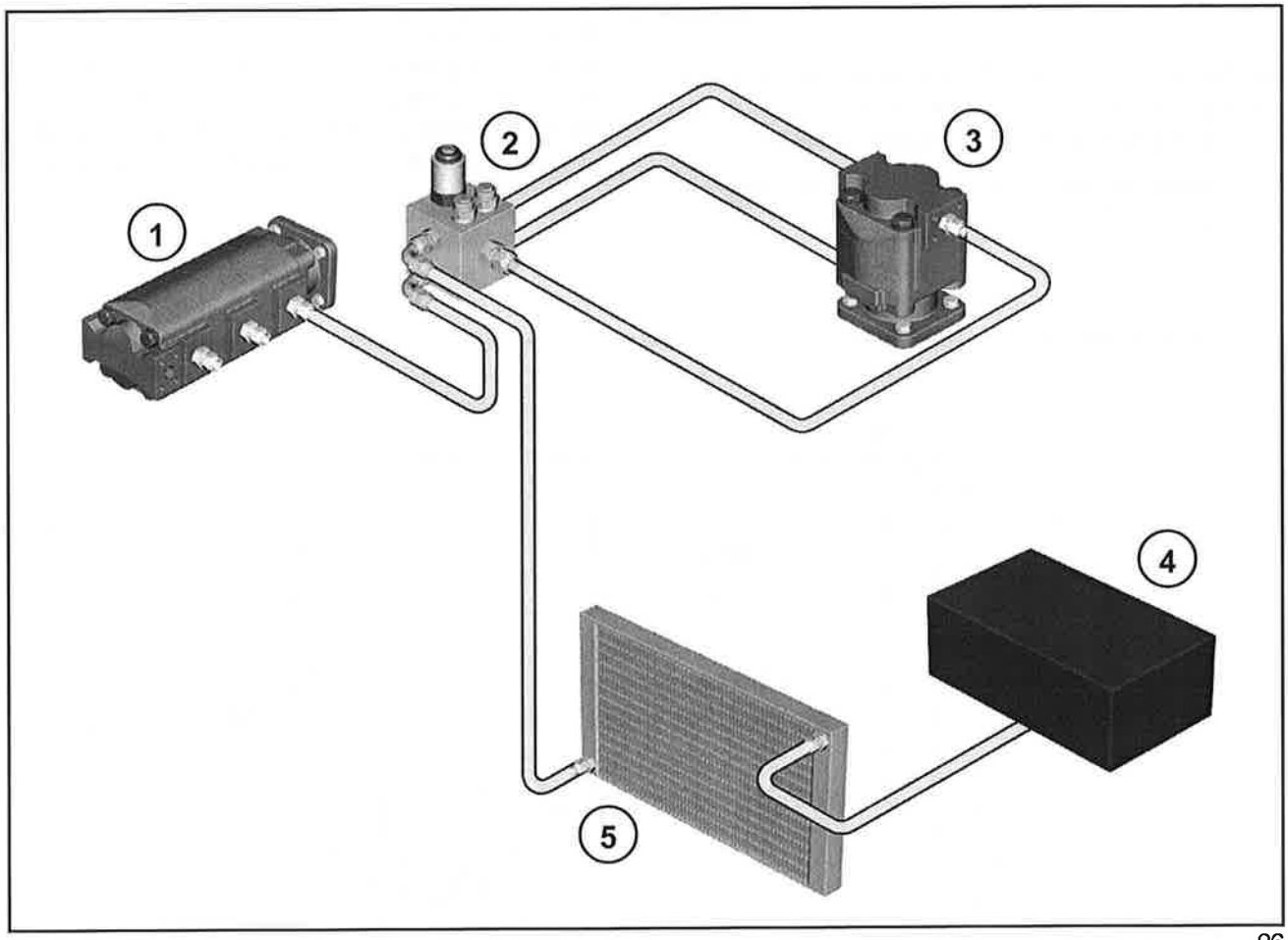

26

1 - P365 Pump (lower)
2 - Primary Extractor Block
3 - M365 Motor
4 - Tank
5 - Radiator

DESCRIPTION

With the system in neutral, the P365 triple pump (lower), through the first section, sends 45 gpm (170.3 liters/min.) of oil to the primary extractor manifold block, which sends the oil to the oil radiator and after to the hydraulic tank.

By activating the primary extractor, the oil volume flows to the primary extractor motor and another volume flows through the flow regulation valve, which will control the extractor speed. After activating the extractor motor, the oil flows through the radiator and returns to the tank.

OPERATION OF THE PRIMARY EXTRACTOR MANIFOLD BLOCK

In neutral, the oil flows through the relief valve and through the primary extractor motor. The oil flows through the radiator before going to the tank.

By operating the extractor, the pilot valve is energized, closing the oil flow.

This causes a pressure increment and closes the relief valve, forcing the oil flow to go to the extractor motor and to the Valvistor, which also receives an electric signal to relieve the oil passage through it. This oil flow is adjusted by the operator through the monitor.

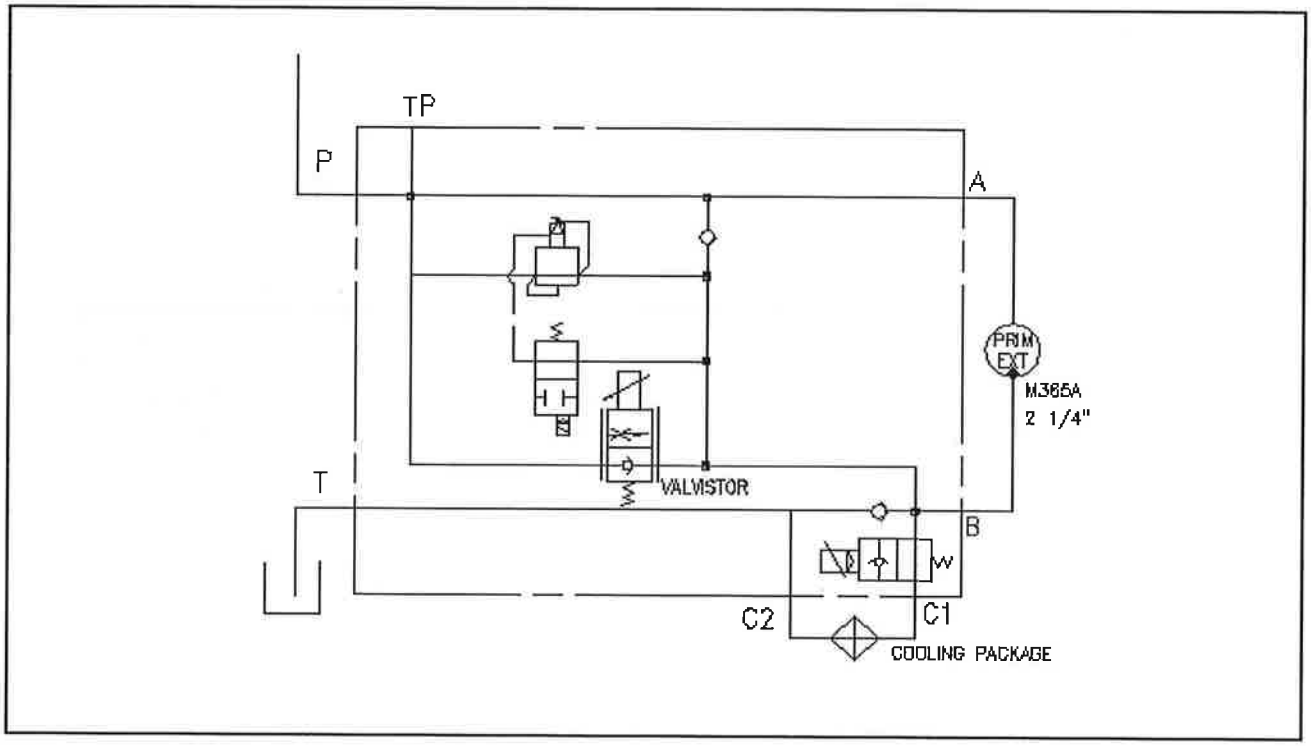

27

CHECKING THE PRESSURE OF THE PRIMARY EXTRACTOR CIRCUIT

Connect a 5000 psi (344.7 bar) pressure gauge in the test point of the Valvistor block. Close and plug the pressure hose in the extractor motor. Operate the extractor fan and adjust the relief valve to 3500 psi (241 bar). Reconnect the hose and remove the pressure gauge.

NOTE: *The extractor speed must be fixed to the maximum during the test.*

Adjust the main relief valve to 3500 psi (241 bar).

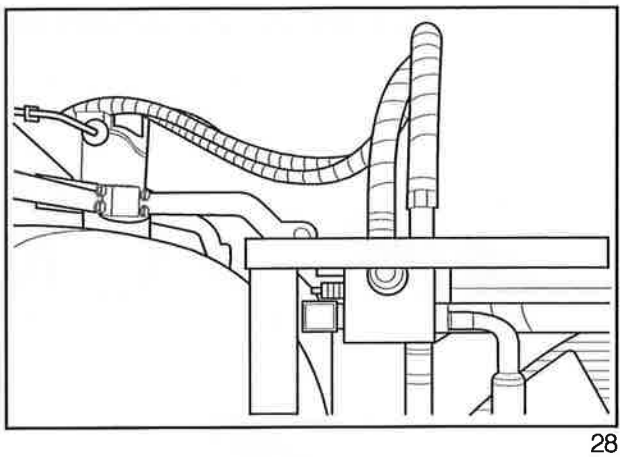

28

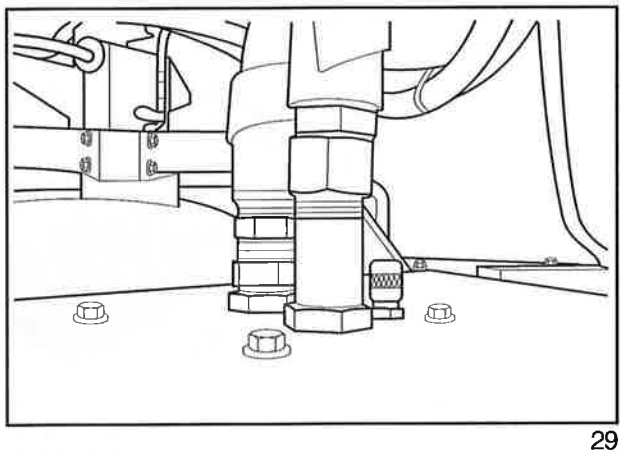

29

ELEVATOR, SECONDARY EXTRACTOR AND BIN FLAP CIRCUIT

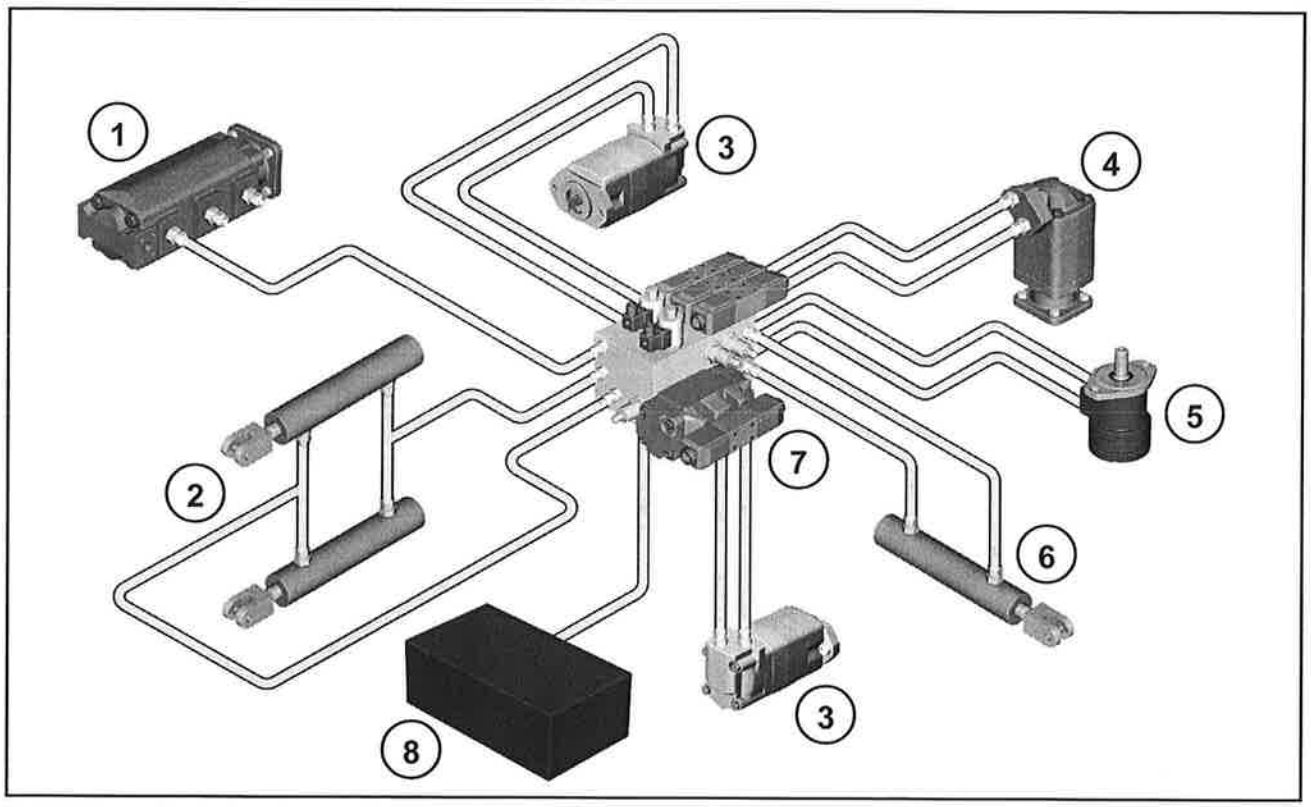

1 - P365 Pump (Center)
2 - Elevator Cylinder
3 - Discharge Conveyor Motor
4 - Secondary Extractor Motor
5 - Secondary Hood Slew Motor
6 - Bin Flap Cylinder
7 - Elevator Block
8 - Tank

30

DESCRIPTION

With the system in neutral, the P365 triple pump (center), through the third section, sends 29 gpm (109.8 liters/min.) of oil to the elevator manifold block, which sends the oil to the hydraulic tank.

When the elevator block functions are activated, the oil is directed to operate the implements in the following sequence:

a - Secondary extractor

b - Conveyor motors

c - Secondary extractor hood slew motor

d - Bin Flap Cylinder

e - Elevator lift cylinder

Operation of the elevator circuit's valve block

In neutral: In neutral position, the solenoid valves (1, 2 and 7) are in the open position.

This allows the flow through the three valves and the return to the tank.

Operation functions: The operation functions switches are located in the cabin. When any of these functions is activated (elevator lift valve - 10; elevator hood slew - 9, or secondary extractor hood slew valve -8), the drive pressure is also supplied to close the valve (1). With the valve (1) closed, the flow will pass through the sequence valve (5), which will increase the pressure in the service channel to 1750 psi (120.6 bar).

This pressure adjustment is controlled by the valve (5). This pressure will be kept in the channel for the operation functions, and the flow excess will continue through the valve (5), returning to the tank, to the secondary extractor or to the elevator, in the case they are deployed.

If the elevator or the secondary extractor is being operated, the sequence valve (5) will only be activated to raise and lower the elevator when there is enough counterpressure generated by these functions in order to operate the bin flap and the secondary slewing hood.

Sequence valve adjusted to 1750 psi (120.6 bar).

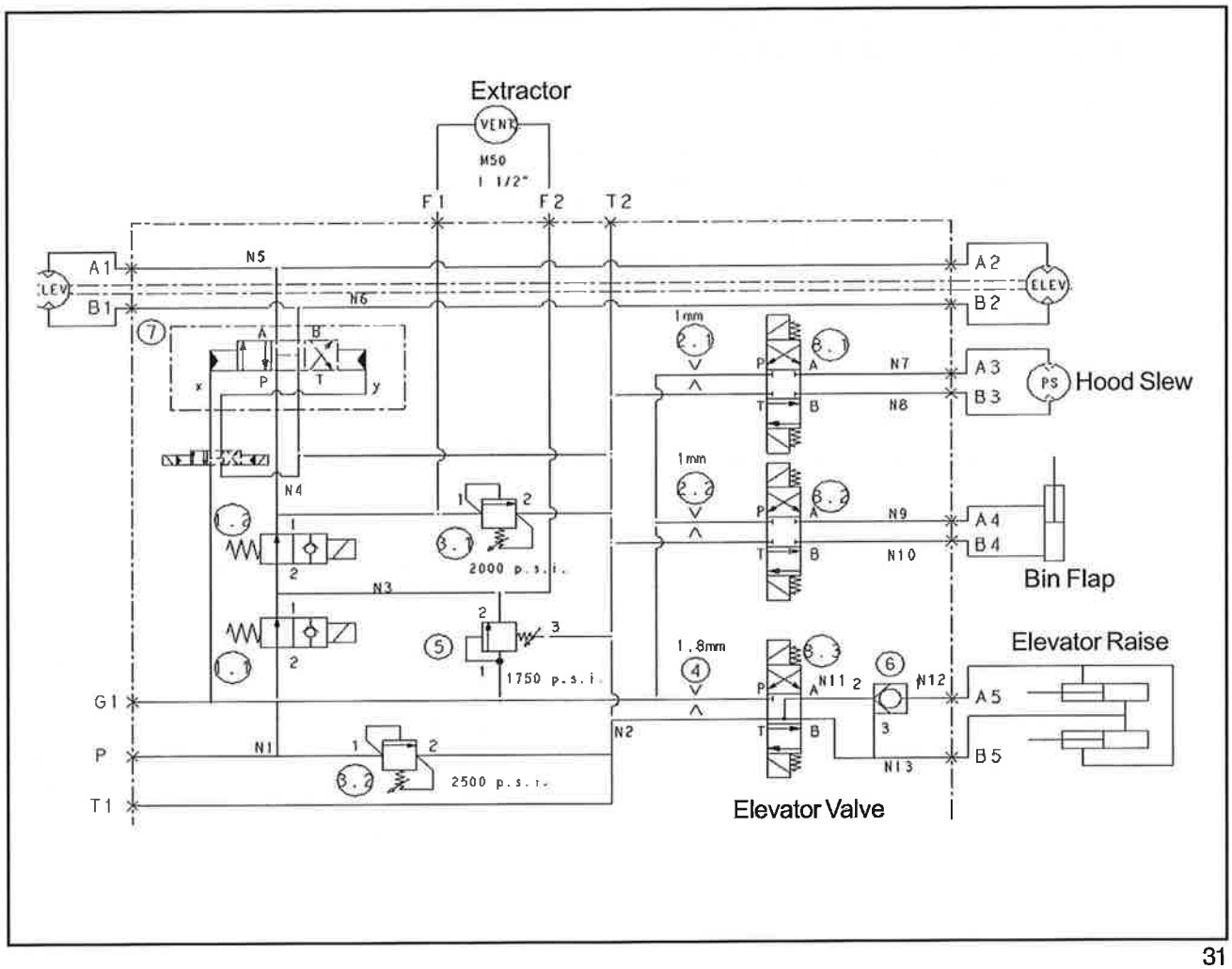
Extractor
VENT
M50
1 1/2"
F1
F2
T2
A1
B1
LEV
N5
N6
A2
B2
ELEV
1mm
N7
N8
A3
B3
PS
Hood Slew
N4
2000 p.s.i.
N3
1mm
N9
N10
A4
B4
Bin Flap
1750 p.s.i.
1.8mm
N11
N12
Elevator Raise
A5
B5
G1
P
T1
N1
N2
N13
2500 p.s.i.
Elevator Valve

31

CHECKING THE PRESSURE OF THE ELEVATOR, SECONDARY EXTRACTOR AND BIN FLAP CIRCUIT

Checking the elevator relief valve

Install a 5000 psi (344.7 bar) pressure gauge in the test point of the elevator valve block. Disconnect and plug a hose on both elevator's transmission motors. Operate the elevator and adjust the relief valve (3) to 2000 psi (138 bar).

Reconnect the hoses and remove the gauge.

NOTE: *A hose must be simultaneously plugged on both motors. If only one hose and one motor are plugged, the elevator will still keep on slewing.*

Adjust the main relief valve to 2000 psi (138 bar).

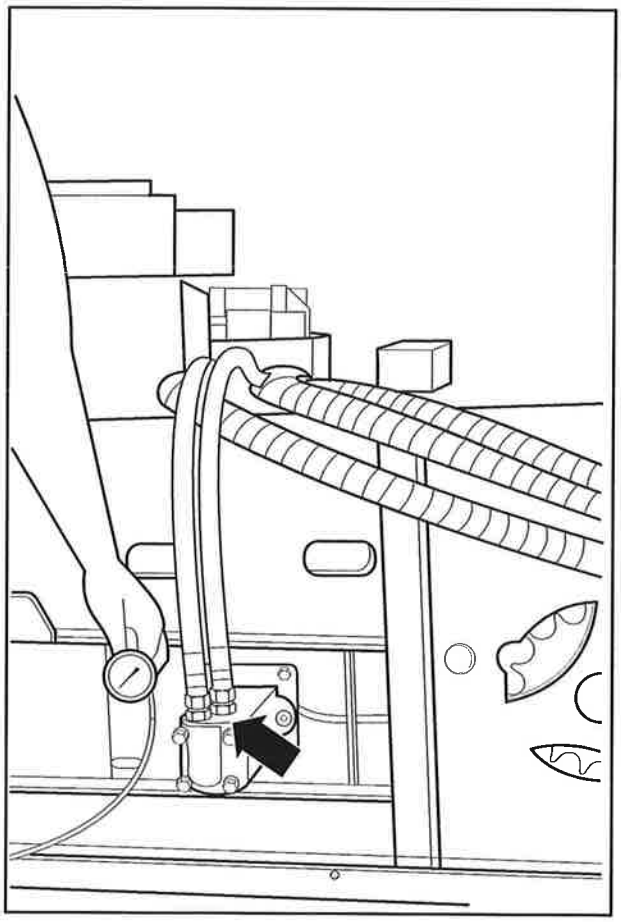

32

Checking the sequence valve adjustment

Install a 5000 psi (344.7 bar) pressure gauge in the test point of the elevator valve block. Operate the bin flap cylinder until it reaches the end of the course.

Adjust the sequence valve (5) to 1750 psi (120.6 bar).

Remove the gauge.

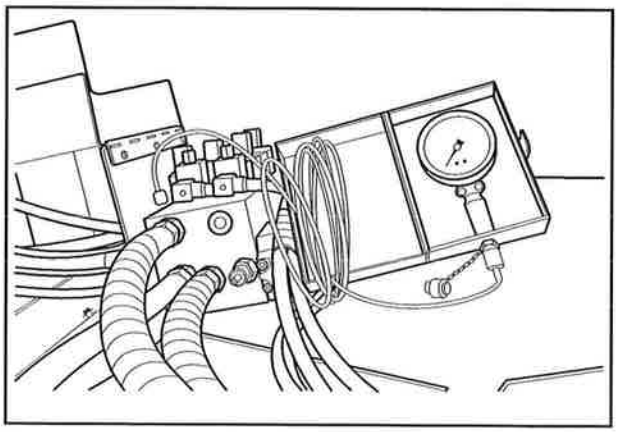

33

Checking the secondary extractor relief valve

Install a 5000 psi (344.7 bar) pressure gauge in the test point of the elevator valve block. Lock the extractor fan and adjust the relief valve (4) to 2500 psi (172.3 bar). Release the extractor fan and remove the pressure gauge.

CYLINDERS CONTROL CIRCUIT (A8000)

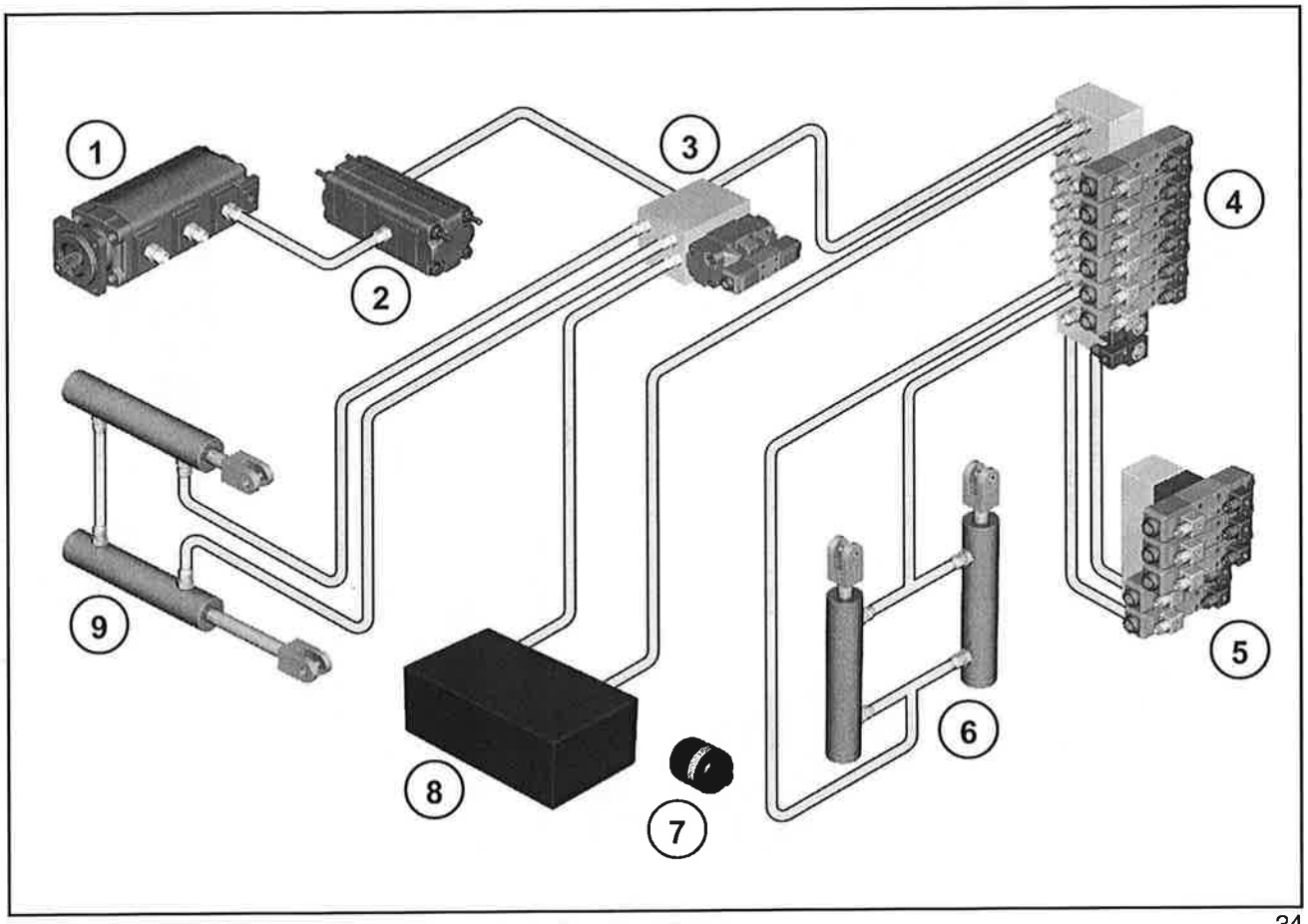

34

1 - P365 Pump (lower)
2 - Flow Divider
3 - Steering Block
4 - Vickers Block
5 - Auxiliary Control
6 - Suspension Cylinder
7 - Accumulator
8 - Tank
9 - Steering Cylinder

CYLINDERS CONTROL CIRCUIT (A8800)

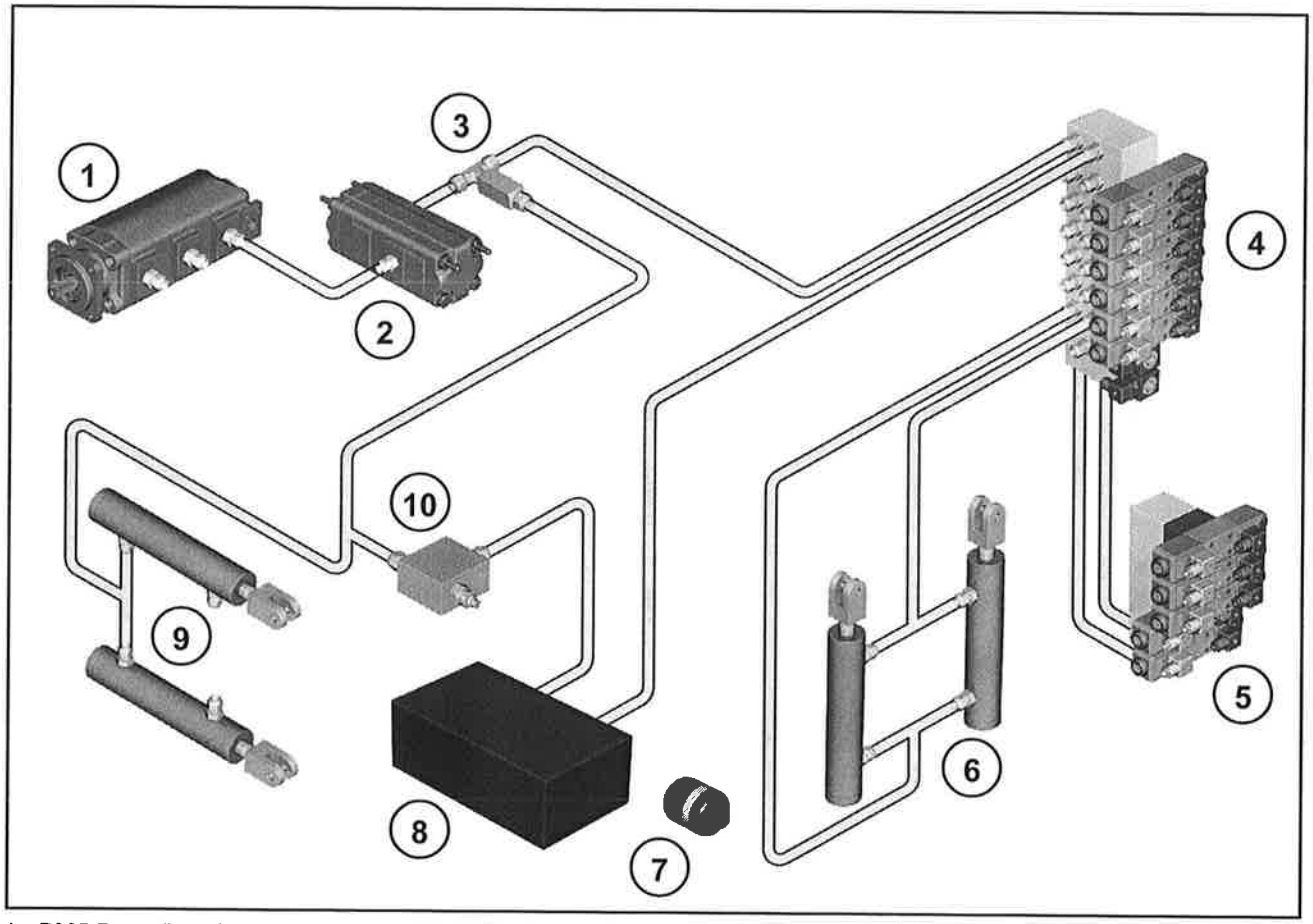

35

1 - P365 Pump (lower)
2 - Flow Divider
3 - Check Valve
4 - Vickers Block
5 - Auxiliary Control
6 - Suspension Cylinder
7 - Accumulator
8 - Tank
9 - Track Cylinder
10 - Track Cylinder Valve

DESCRIPTION

The Vickers block receives 12 gpm (45.4 liters/min.) in the section 1" of the flow divider.

In track machines (A8800), the flow goes directly from the flow divider to the Vickers control.

In tire machines (A8000), the oil flow 12 gpm (45.4 liters/min.) leaves the flow divider and goes to the steering manifold block, which directs the oil to the Vickers control.

When the machine is installed with optionals (crop dividers and basecutter tilt, and the side trim and knockdown roller raise and lower), the oil flow continues from the six-function Vickers control to a five-function Vickers control (depending on the options package, this control can operate four, five or six functions).

Operation of the elevator circuit's valve block

The six-function Vickers control operation is represented in the following diagrams.

The relief valve (2) protects all the functions.

When no functions of the cylinder are being used, the valve with the pressure sensor (4) is opened and the oil flow returns to the tank.

When any function is operated, one or two pilot valves (1) are activated. This generates a drop of pressure around the valve with pressure sensor (4), which after closes the reservoir line and the flow is suppressed through the pressure rail in the valve, to the function being used.

For the basecutter, the topper and the elevator slew, both the pilot valves (1) are activated, which will completely close the valve with pressure sensor (4), and the total flow of 12 gpm (45.4 liters/min) is suppressed to these functions.

When the crop dividers raise or the primary hood slew are being used; only one pilot valve is activated, suppressing 6 gpm (22.7 liters/min).

NOTE: *When the right side crop divider is used, only one of the pilot valves is used, and when the left side is used, the other one is used. This supplies 12 gpm (45.4 liters/min) when both crop dividers are operated together.*

The restrictor (9) is between the pressure lines and the tank, to remove any residual pressure in the pressure line in neutral, so that the piloted restriction valves (3) installed in the basecutter raise, topper and right and left crop dividers will work as counterbalance valves.

The same piloted restriction valves (3) are installed on the function of the elevator slew, and work as the cross line relief. The Cetop for the elevator slew is of the open center type, which allows it to work as relief for the crossed lines.

NOTE: *Screw the relief valve (2) to the INSIDE direction, in order to INCREASE the pressure. Unscrew the checking pilot valve (3) (counterbalance valves and relief valves of the elevator's cross line) to the OUTSIDE direction, to INCREASE the pressure.*

Vickers Block (Cylinders)

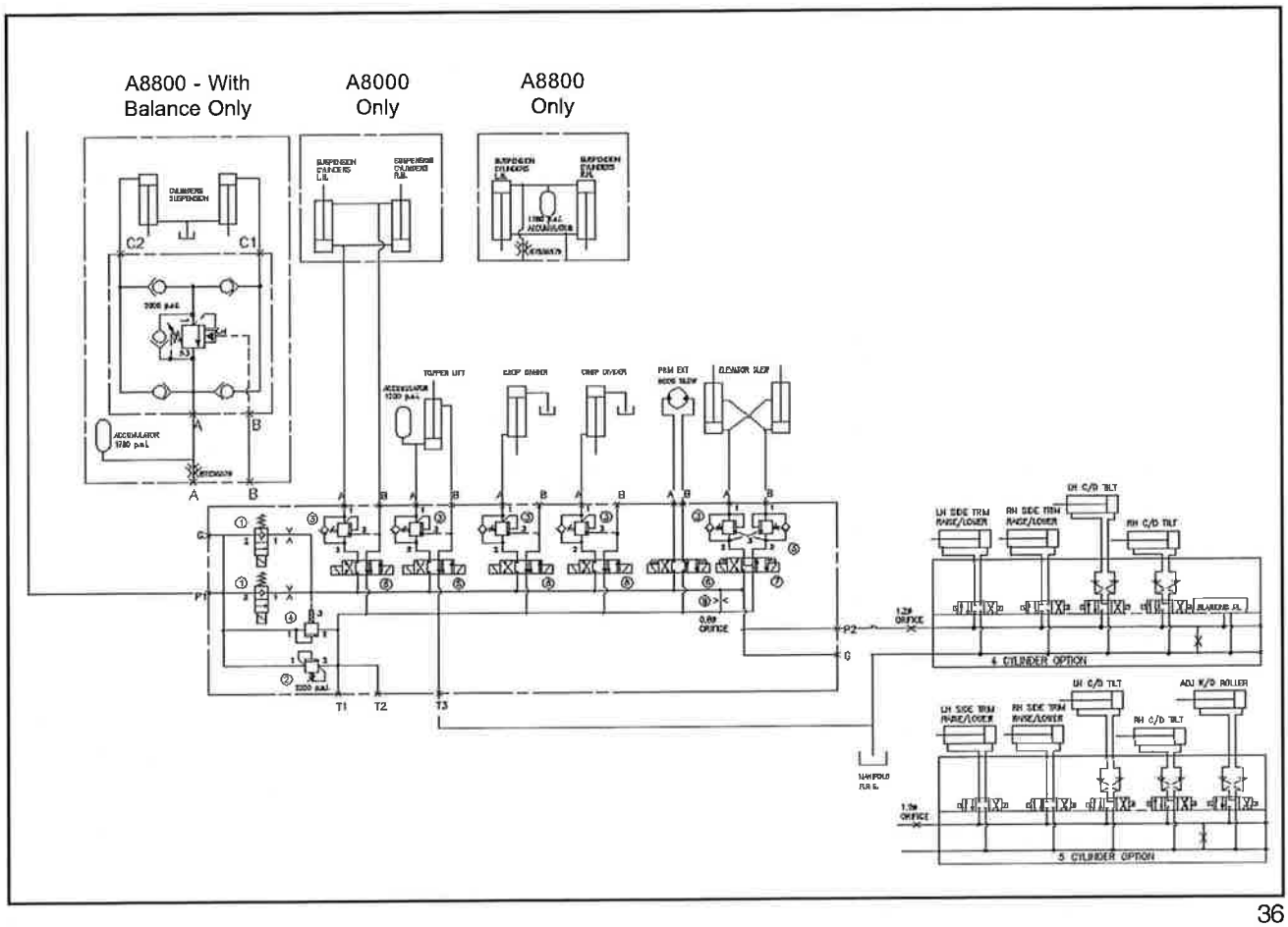

36

OPERATION OF THE STEERING MANIFOLD BLOCK (A8000)

When the steering is not being activated, the oil enters into the steering manifold block (1), flowing through the proportional priority valve, reaching the point "P" of the direction valve. As this valve is with its center closed, an overload will be generated in the system, which will drive the proportional priority valve, directing the oil to the cylinders' control.

When one of the steering cylinders is activated, the direction valve will be electrically piloted, directing the oil to one of the cylinders.

When the cylinders reach the end of the route, a pressure overload will be generated, which will make the check valve to direct the oil to the relief valve, and once the system pressure gains the pressure adjusted in this valve, it will be open, sending the oil to the tank.

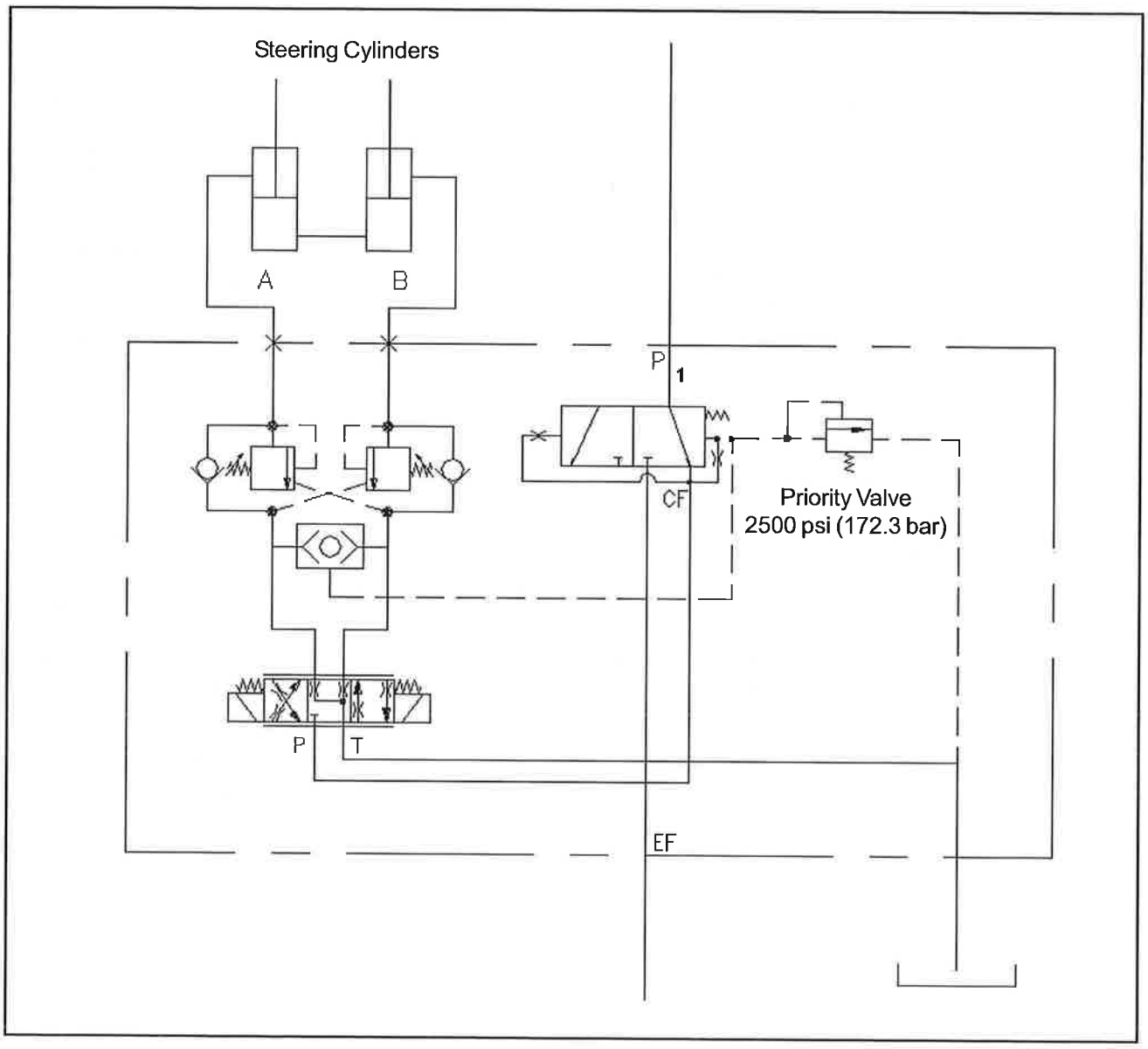

Checking the cylinders' control valves

Main relief valve

Connect a 5000 psi (344.7 bar) pressure gauge in the test point between the pump and the cylinders control. Operate any of the cylinder function, except the elevator slew, until the cylinder reaches the end of its course. Adjust the main relief to 2200 psi (151.7 bar). Remove pressure gauge.

Adjustment of the main relief valve: 2200 psi (151.7 bar)

Adjusting the elevator (internal type) counterbalance and cross line relief valves, located under the right platform.

IMPORTANT NOTES:

To **INCREASE** the pressure, adjust the regulator to the **OUTSIDE** direction, to **DECREASE** the pressure, adjust the regulator to the **INSIDE** direction.

To increase the system pressure to 3000 psi (206.8 bar), you must follow the procedures below:

A8800 Model: In the first section of the flow divider that feeds the cylinder control, you must remove the hose that leaves the restriction and put a plug (1/4"). This way, you can increase the main relief pressure from 2200 psi (151.7 bar) to 3000 psi (206.8 bar). After the tests / checking, lower again the pressure to 2200 psi (151.7 bar), remove the plug and reinstall the hose in the valve again.

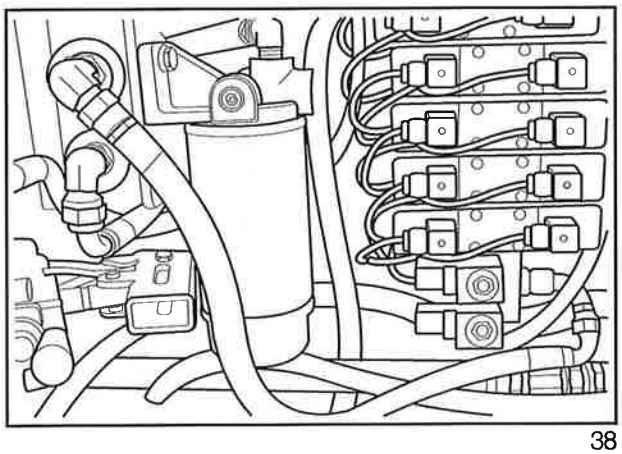

38

A8000 Model: You must remove the inlet and outlet oil hoses from the priority valve and connect them. This way, you can increase the main relief pressure from 2200 psi (151.7 bar) to 3000 psi (206.8 bar). After the tests / checking, lower again the pressure to 2200 psi (151.7 bar), and reinstall the hoses in the priority valve again.

1. Place a block under the basecutter legs and lower the machine until it sets over the block.
2. Adjust the main relief valve of the main manifold block to 3000 psi (206.8 bar).
3. Remove both hoses from the section of the elevator slew and plug the hoses.
4. Completely lower the topper, remove the hose from point "A" of the topper's section and plug it.
5. Remove the elevator slew hose from the point "A" and plug it.
6. Connect a small hose from the point "A" of the topper to the point "A" of the elevator slew.
7. Install a 5000 psi (344.7 bar) pressure gauge in the test point of the manifold block.

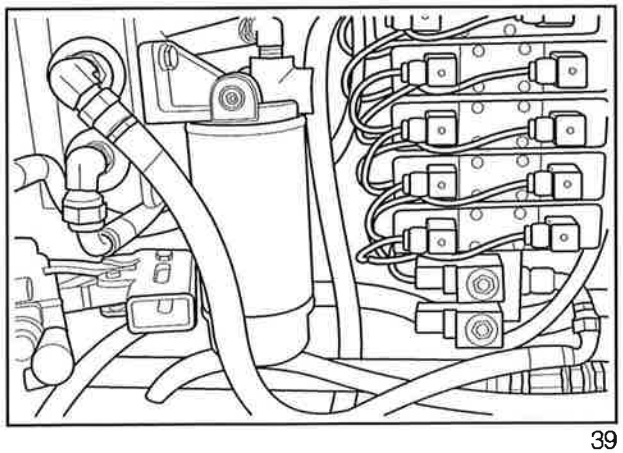

39

8. Operate the function to raise the topper. This will test the counterbalance valve that is assembled for the right side elevator slew (valve next to the chassis), between the two that are on the top of the cylinders control.

Adjustment of the right side elevator slew relief valve: 2800 psi (193 bar).

9. T o adjust the second relief line of the elevator crossing (LH valve), replace the left side valve by the right side valve and proceed with the test (Item 6).

10. To adjust the topper counterbalance valves and the sections of the crop dividers left and right sides, remove the counterbalance valve of these functions, connecting it in the right-side elevator line counterbalance valves, and proceed with the test (Item 6); for these valves, use the pressure of 2100 psi (144.8 bar). For the suspension valve, proceed the same way, adjusting it to 2800 psi (193 bar).

11. Remove the small hose that is connected from the point "A" of the topper to the point "A" of the elevator, reconnecting the cylinders' hoses.

12. Readjust the main relief valve of the auxiliary manifold block to 2200 psi (151.7 bar).

13. Remove pressure gauge from the valve.

Adjustment of the elevator slew and suspension valve: 2800 psi (193 bar)

Adjustment of the topper and crop divider counterbalance valve: 2100 psi (144.8 bar)

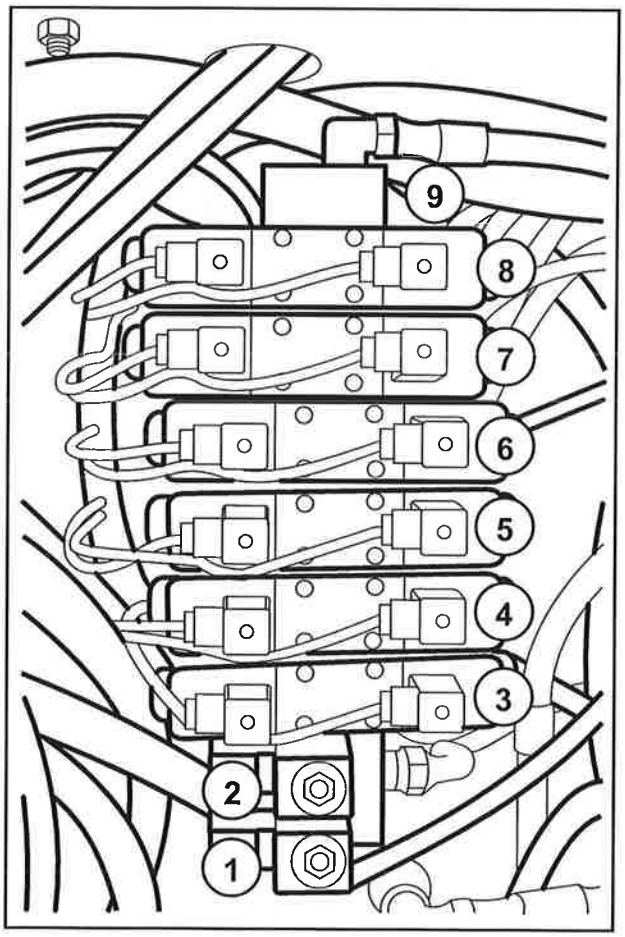

40

1. Pilot valve
2. Pilot valve
3. Basecutter
4. Topper
5. Crop dividers (RH)
6. Crop dividers (LH)
7. Primary extractor hood slew
8. Elevator slew
9. Elevator cross line relief valve

Track Adjusting Cylinder (A8800)

The tracks are automatically adjusted, when any function of the cylinder is used.

A check valve is assembled in the flow divider line to the cylinder control valve.

The check valve hose is connected to the track adjusting cylinders.

The drive track tension is adjusted by varying the quantity of grease in one of the cylinders ends.

The relief valve is assembled between the control and the track adjusting cylinder to protect the circuit.

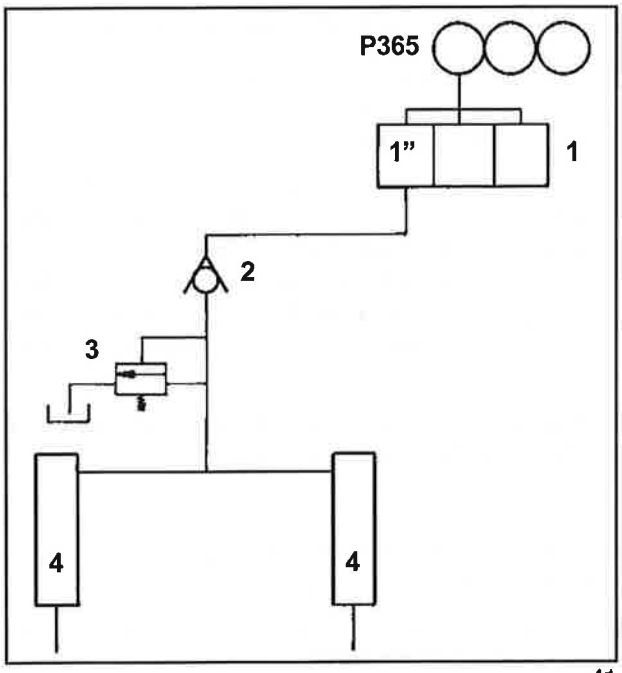

41

1. Flow divider
2. Check valve
3. Relief 2500 psi (172.3 bar)
4. Cylinder

Checking the track adjusting relief valve

Connect a 5000 psi (344.7 bar) pressure gauge in the test point between the pump and the cylinder control valve.

1. Raise the auxiliary control main relief above 2500 psi (172.3 bar).
2. Operate any of the cylinder function, except the elevator slew, until the cylinder reaches the end of its travel.
3. Continue operating the cylinder function and adjust the track relief valve, if necessary, to 2500 psi (172.3 bar).
4. Readjust the auxiliary control main relief valve to 2200 psi (151.7 bar).

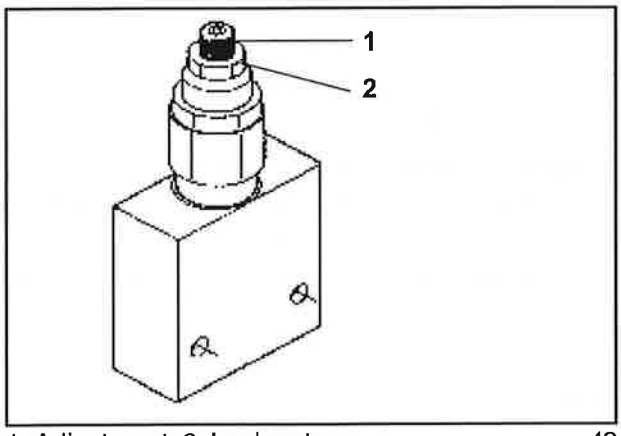

1. Adjustment; 2. Lock nut 42

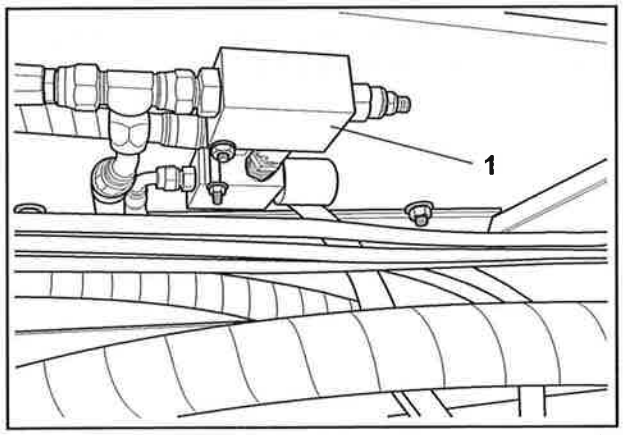

1. Track relief valve 43

Counterbalance (A8800) for the stability kit

The counterbalance valve connects the basecutter lift cylinders to the auxiliary control through the check valves and a relief valve.

During the lifting, the oil flows freely to the cylinders. In uneven ground, the oil of one lift cylinder must flow first through the relief valve before to enter into the other. This prevents the machines' front side from lowering. In getting lower, the pilot valve is opened, which allows the oil to freely return from the cylinders to the tank.

Adjustment of the counterbalance valve in the stability for the track's traction.

NOTE: *The counterbalance is located in the machine's right side, near to the finned roller.*

1. Support the machine on the basecutter or under the chassis front side.
2. Remove the hoses from the counterbalance valve to the basecutter lift, and plug the cylinder's hoses.
3. Completely lower the topper, and remove both hoses from the auxiliary control, plugging them.
4. Connect a small hose from the point "A" of the topper to the counterbalance valve (point "C").
5. Remove the hose from the point "A" in the remote counterbalance valve, and connect the valve to the tank.
6. Install a 5000 psi (344.7 bar) pressure gauge in the test point.
7. Operate the topper raise function to raise it. This will test the counterbalance valve. Adjust the pressure to 1000 psi (69 bar).
8. Reconnect the topper, the counterbalance and the front suspension hoses.

IMPORTANT NOTE:

*To **INCREASE** the pressure, adjust the regulator to the **OUTSIDE** direction, **RELEASING IT**. To **DECREASE** the pressure, adjust the regulator to the **INSIDE** direction, **TIGHTENING IT**.*

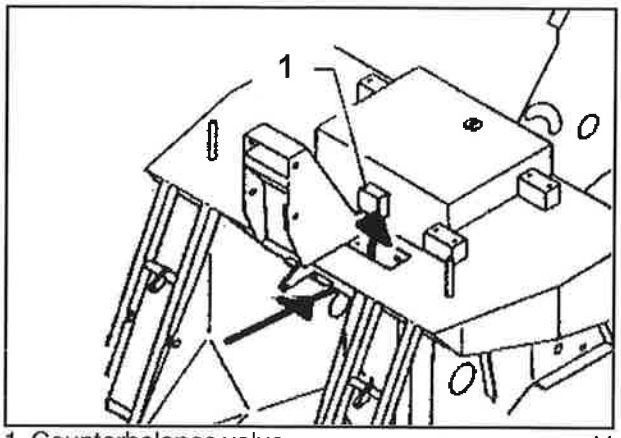

1. Counterbalance valve 44

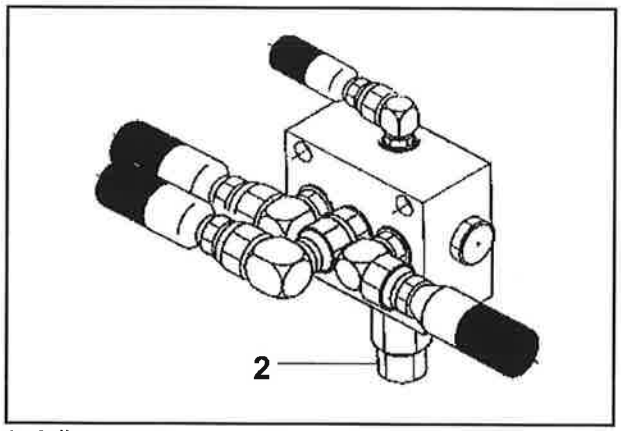

2. Adjustment 45

TRANSMISSIONS AND BRAKES

TRANSMISSION AND BRAKE CIRCUIT (A8800)

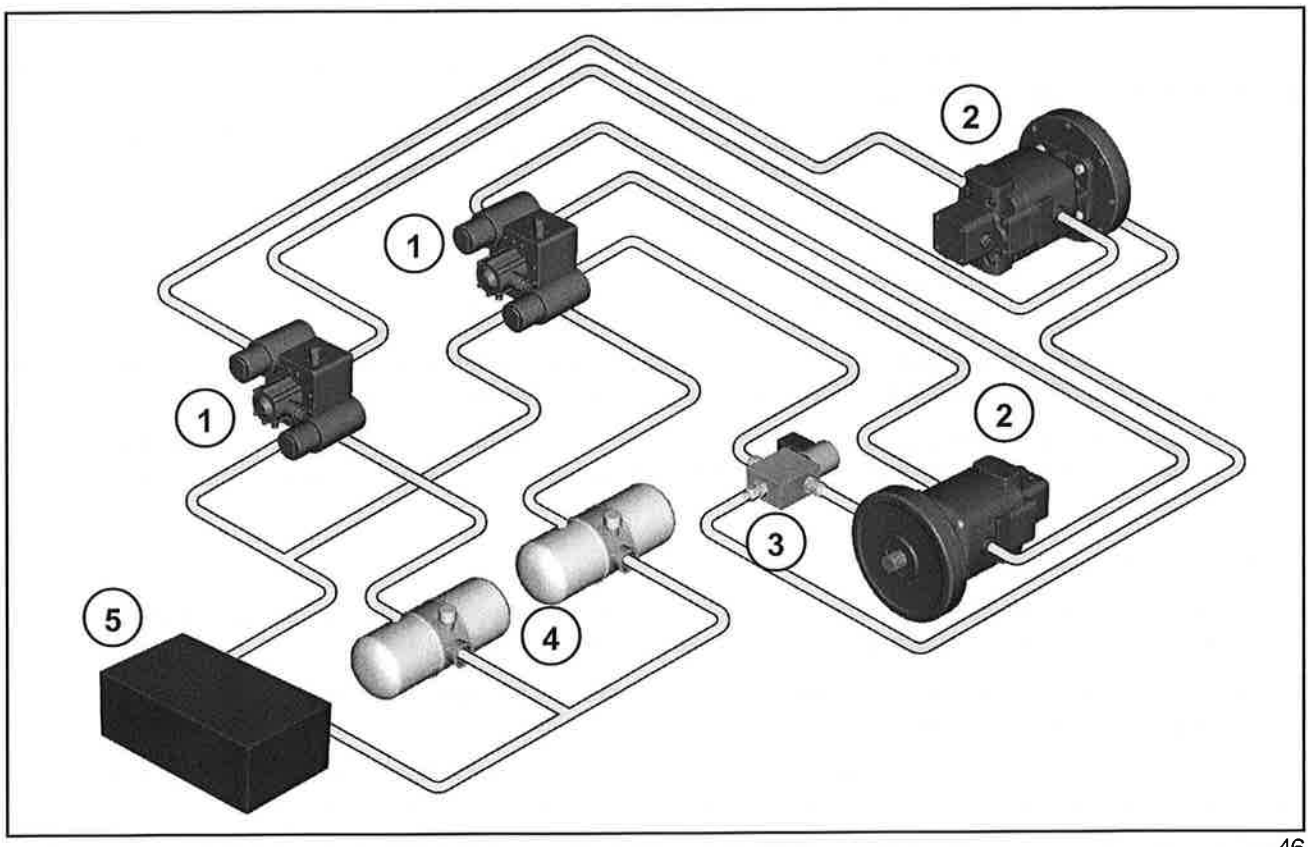

1 - Pump 2 - Motor 3 - Brake Valve 4 - Filter 5 - Tank

46

TRANSMISSION CIRCUIT (A8000)

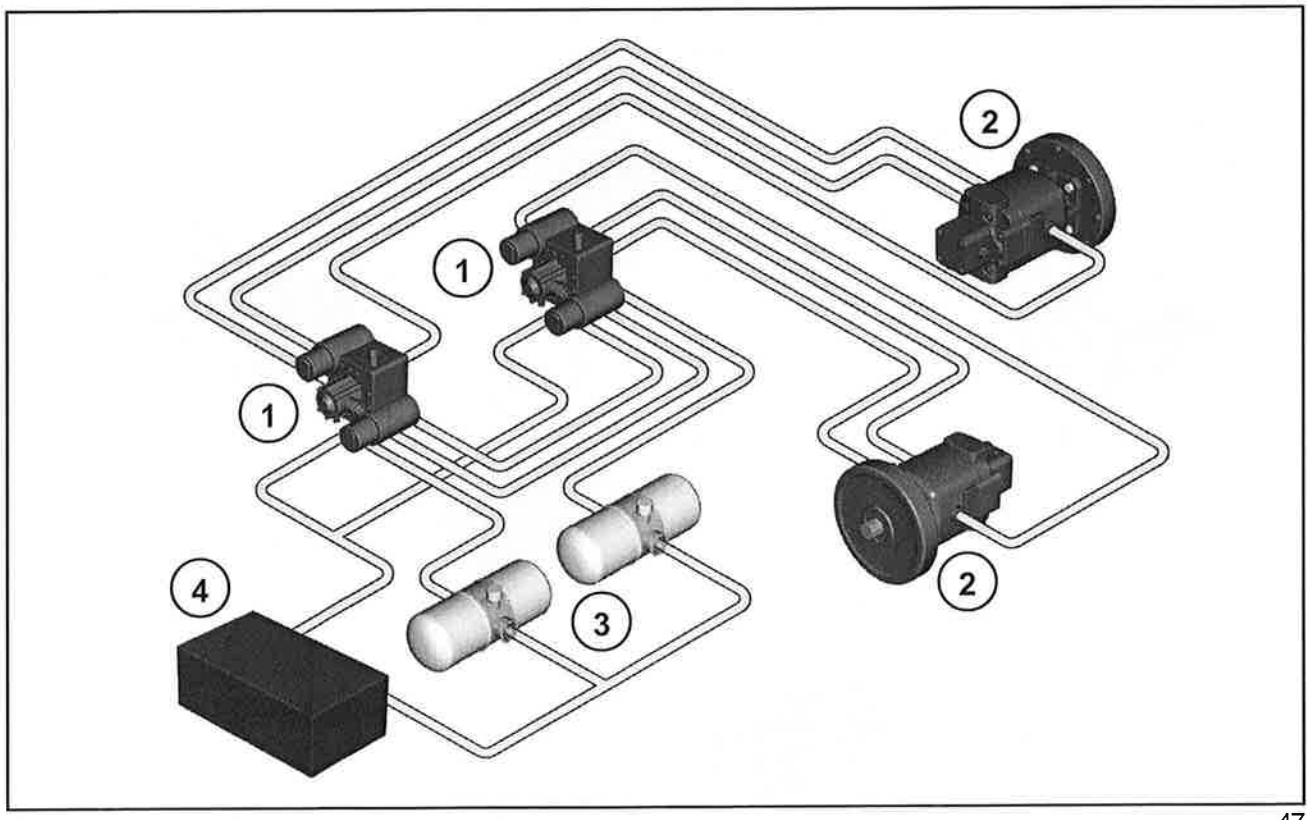

1 - Pump 2 - Motor 3 - Filter 4 - Tank

47

DESCRIPTION

The transmission is composed by two pumps with variable displacement supplying oil to two fixed displacement motors (a combination motor/pump to each drive wheel).

Both the circuits on A8000 machines (tire) are electrically connected by parallel-operated solenoids in order to provide a differentiated capability to the transmission.

Under conditions of difficult traction, the positive traction can be used by operating a switch in the cabin.

Brakes (A8800)

The A8800 harvester (track) brakes are NOT "oil bath". They are applied by springs, releasing hydraulic pressure by the transmission loading pressure [330 to 270 psi (22.7 to 18.6 bar)].

To allow the brake to be applied when the motor is running, there is a switch that activates a solenoid-driven valve, which deviates the oil from the loading pump of the brake pistons, allowing the springs to apply it.

The machine is equipped with a parking brake that consists of a switch that activates a solenoid-driven valve, which deviates the oil from the charge pump of the brake valve, allowing the springs to apply the brake.

Brakes (A8000)

The A8000 harvester (tire) brakes are "oil bath", of the spherical ramp type, applied by springs, releasing hydraulic pressure by the transmission loading pressure [330 to 270 psi (22.7 to 18.6 bar)].

By starting the motor, the loading pressure in the transmission pump supplies oil to the cylinders in the brake set, which compresses the springs and releases the brake.

The double section of the control valve assembled in the cabin floorboard allows the operator to apply the brake, releasing hydraulic pressure from the cylinder, allowing the springs to apply the brake.

The machine is equipped with a parking brake that consists of a switch that activates a solenoid-driven valve, which deviates the oil from the charge pump of the brake valve, allowing the springs to apply the brake.

BRAKE CIRCUIT (A8000)

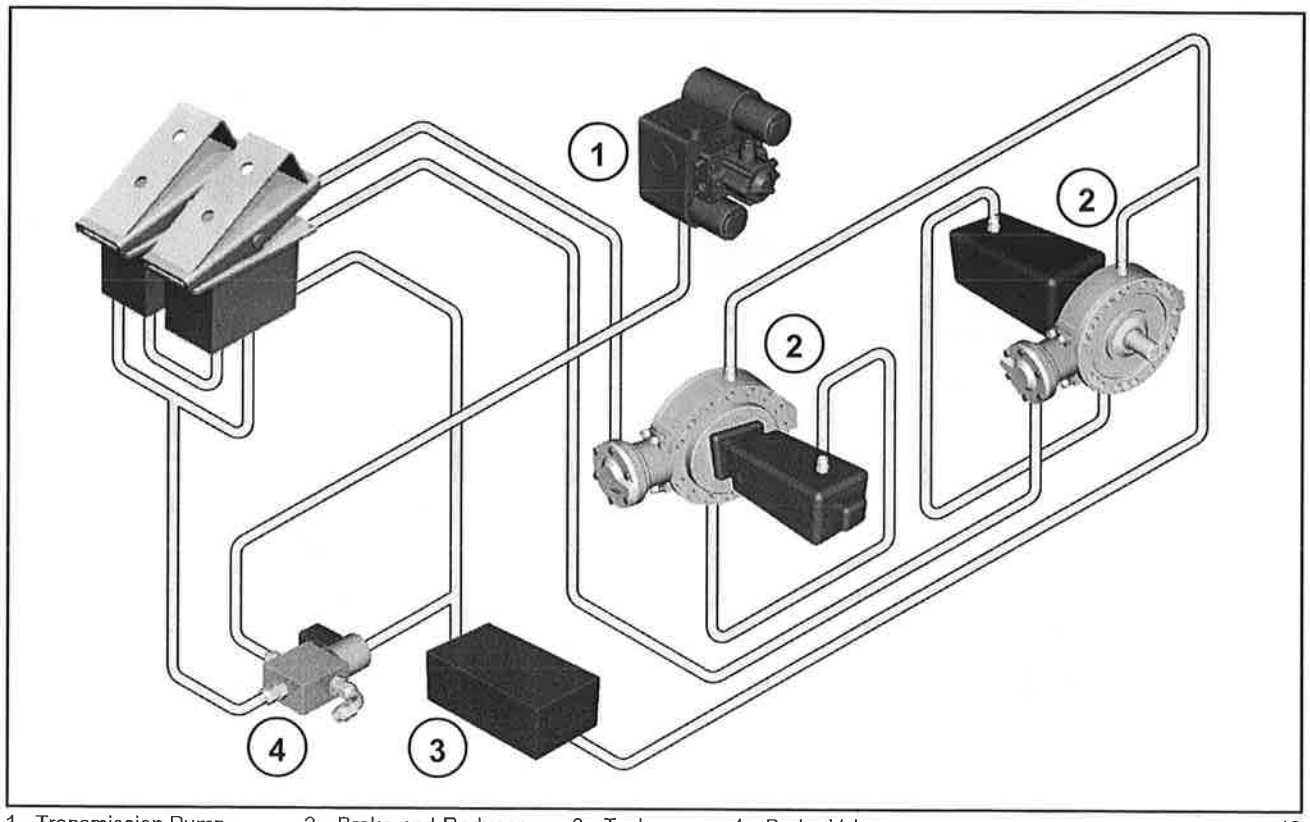

1 - Transmission Pump (Load Pump) 2 - Brake and Reducer 3 - Tank 4 - Brake Valve

CHECKING THE TRANSMISSION VALVES (A8000/ A8800)

NOTE: *All tests in the transmission must be performed with hydraulic oil at 40° C (104° F).*

For engines with high HP output, with maximum load at 2100 RPM, the tests must be performed with the engine running at 1500 RPM. For engines with low HP output, with maximum load at 2500 RPM, the tests must be performed with the engine running at 1800 RPM.

Tests on A8000 machines (tire) must be performed with the positive drive switch activated or, alternatively, disconnect and plug the solenoid valves hoses, in order to separate both circuits.

The values of vacuum for the load pump section must be checked (a testing nipple of 9/16" jic is assembled in the pump's inlet suction pipe).

The vacuum level must be smaller than 7" Hg, if it is higher, the suction filters must be replaced.

Load pump relief valve (low pressure relief valve)

Connect a 500 psi (34.4 bar) pressure gauge in the load pressure point of the load pump.

With the engine running at the correct speed and the traction lever in neutral, the pressure gauge must indicate 330 ± 25 psi (22.7 ± 1.7 bar).

An adjustment can be made by using calibrated shims in order to adjust the low pressure valve located in the load pump top.

Put shims to increase the pressure, and remove them to decrease it.

NOTE: *The low pressure relief valve in the motor's manifold block must also be checked at this moment.*

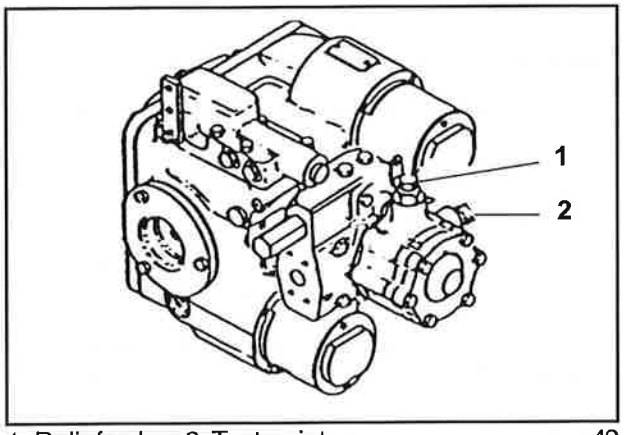

1. Relief valve; 2. Test point 49

Low pressure relief valve (motor manifold block)

NOTE: *Disconnect wiring harness from the brake coil.*

With a 500 psi (34.4 bar) pressure gauge connected as previously described, apply the brakes or block the wheels / tracks and, gradually, move the traction lever to the drive position.

The high pressure generated in the loop will move the selection valve, which will open the low pressure loop (load pressure) to the low pressure relief valve of the motor assembly.

There is a selector spring in the motor valve block rear side (assembled in the machine), which will improve the machine driving.

NOTE: *It is not necessary to move the lever until the end of its course. The pressure gauge must indicate 270 ± 25 psi (18.6 ± 1.7 bar). The pressure adjustment can be made through calibrated shims; adjust the relief valve located in the motor manifold block. Put shims to increase the pressure, and remove the shims to decrease the pressure.*

NOTE: *It is important that the relief is adjusted to a minimum of 40 psi (2.75 bar) below the first pump adjusting valve, in order to keep a flow of cooling oil inside the high pressure loop.*

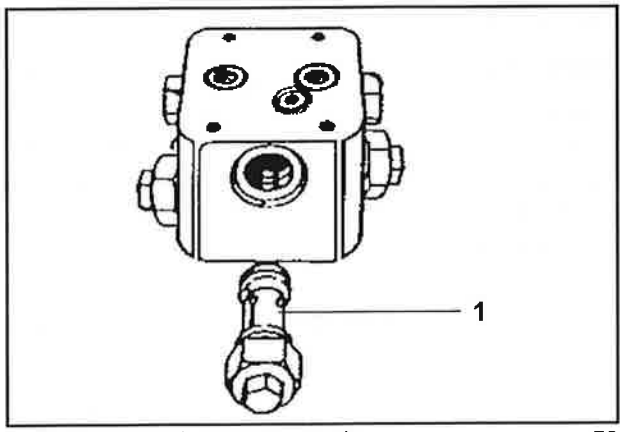

1. Relief valve (Low pressure) 50

When performing the adjustments with shims in any of the transmission relief valve, remove completely the cartridge from the motor valve block. Make the adjustments on a bench vise, and then assemble the complete cartridge again.

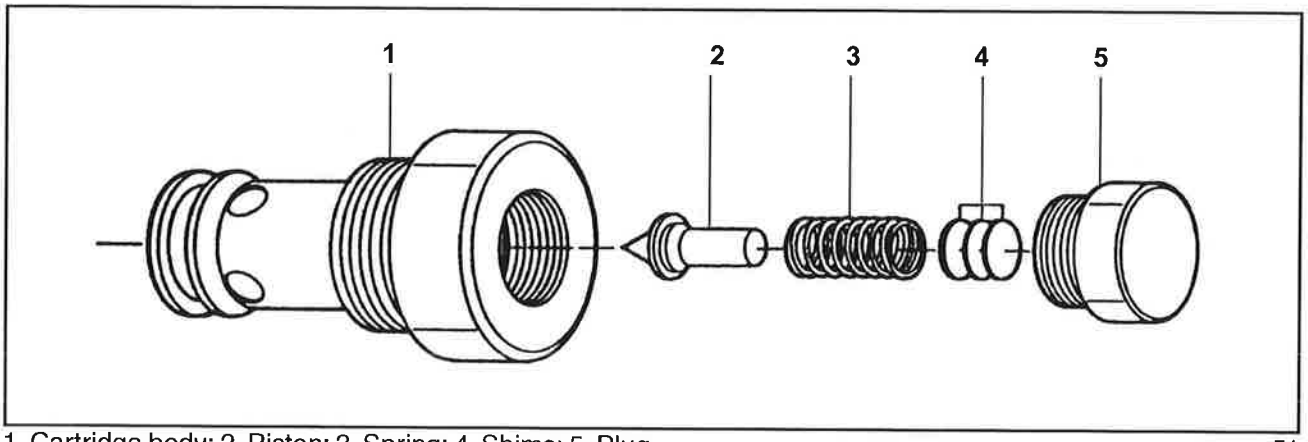

1. Cartridge body; 2. Piston; 3. Spring; 4. Shims; 5. Plug 51

Transmission return (High pressure)

The transmission return is protected by two high pressure relief valves, located in the motor valve block.

The valve block is assembled directly in the transmission drive motor end.

The high pressure relief valves are assembled in opposite order to the valve block.

The test points are located in the valve block in the opposite side to the relief valve tested by them.

The high pressure relief valve turned to the machine front side protects the return's reverse side, while the one turned to the rear side protects the machine forward.

Testing of the high pressure relief valves

NOTE: *Disconnect wiring harness from the brake coil.*

Connect a 10000 psi (689.5 bar) pressure gauge in one of the high-pressure test points for the motor transmission block. Put the shims (approximately 2.5 mm) in the IPOR valve, located in the cover of the transmission pump.

Check if these shims are marked, so that they can be removed after the test conclusion. This increases the IPOR pressure above the high pressure relief adjustment.

NOTE: *Be careful removing the IPOR cover, in order to prevent the spool and the sensing pins from dropping from the body.*

Block the wheels / tracks with the engine running at the correct speed. Slowly move the traction lever to the travel direction to which the pressure gauge was installed.

The pressure gauge must indicate 6500 psi (+250/-100 psi) [448 bar (+17.2/-6.9 bar)]. Adjustments can be made with calibrated shims in the high pressure relief valve. Put shims to increase the pressure, remove them to decrease it.

Change the pressure gauge to the opposite direction: the pressure gauge must indicate the same pressure previously read to the other side. Adjust it if necessary. Remove the extra shims from the IPOR valve and repeat the procedure to the other transmission's motor/ pump assembly.

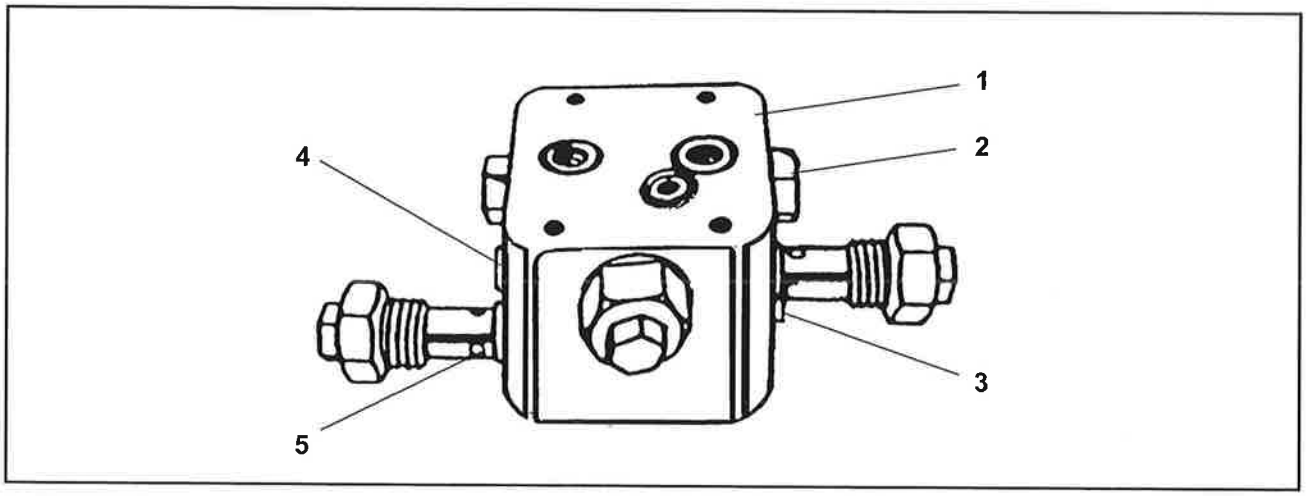

1. Valve block
2. HIGH PRESSURE (Relief valve 1)
3. HIGH PRESSURE (Test point 1)
4. HIGH PRESSURE (Test point 2)
5. HIGH PRESSURE (Relief valve 2)

52

IPOR (Internal pressure control)

The IPOR control is assembled in the transmission pump cover. Its function is to prevent the high pressure relief valves from operating continuously. That is possible restricting the flow to the displacement control, thus reducing the pump's pumping.

Adjustment test for the IPOR control

Connect a 10000 psi (689.5 bar) pressure gauge in any point of the high pressure test located in the for transmission motor valve block.

With the engine running at the correct speed, slowly move the traction lever until it reaches the end of its course to the direction in which the test pressure gauge was assembled. The pressure gauge reading must be of 5300 ± 100 psi (356.4 ± 6,9 bar). Adjustments can be made with calibrated shims in the IPOR valve. The shims are placed behind the spring in the IPOR cover.

NOTE: *Be careful removing the IPOR cover, in order to prevent the spool and the sensing pins from dropping from the body.*

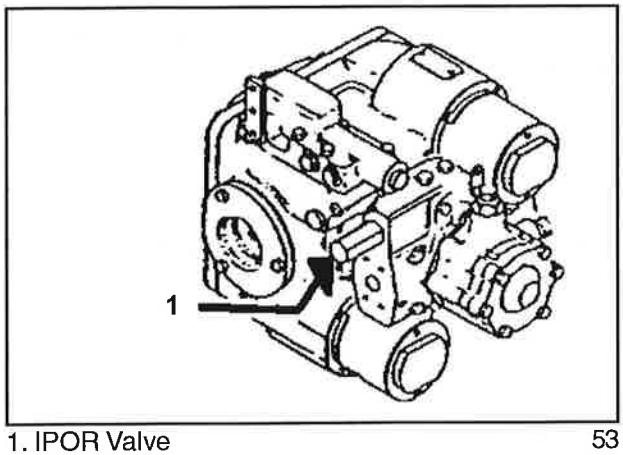

1. IPOR Valve 53

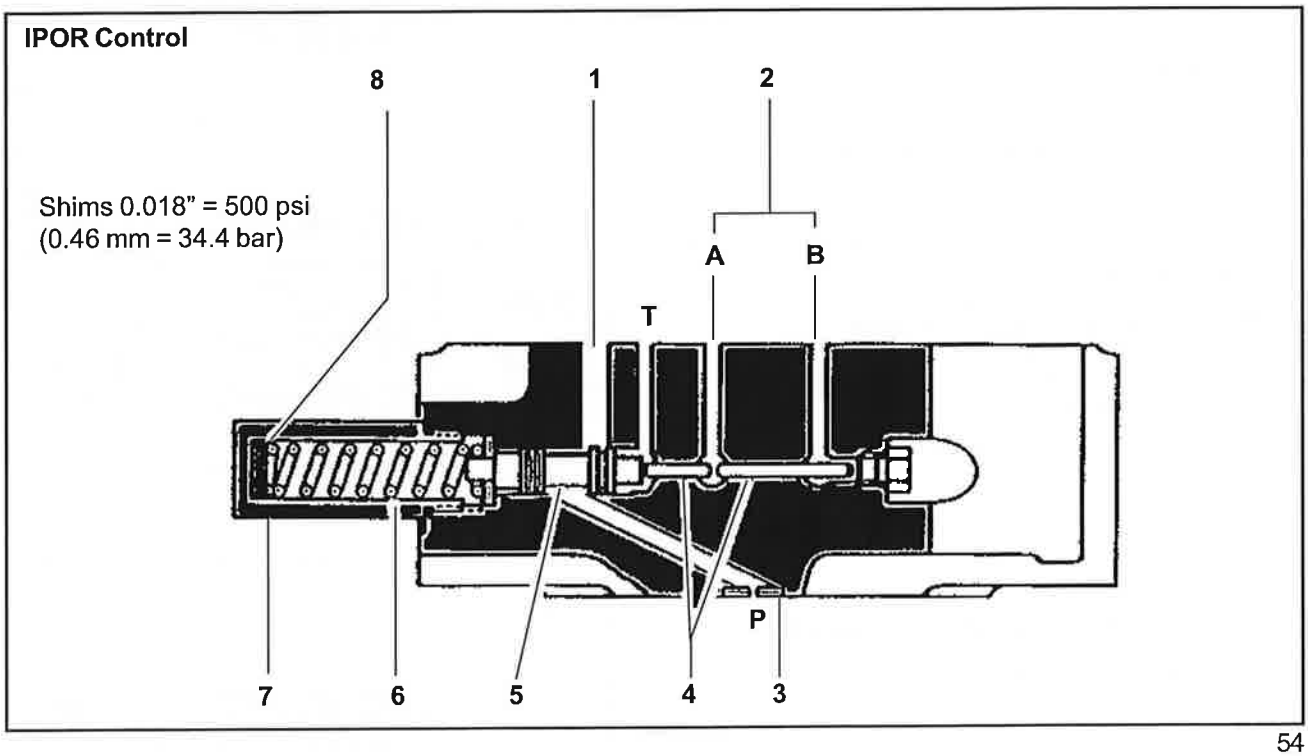

54

1. Internal load pressure - Valve control point
2. Pressure system
3. Plate-type hole
4. Sensing pins
5. Spool
6. Spring
7. Cap
8. IPOR pressure - Adjusting Shims

TRANSMISSION PUMP CALIBRATION

Powertrain calibration

ATTENTION: *The calibrations below must only be performed after replacing some components directly related to the electronic transmission pump system, such as solenoid, pump, governor, sensor and steering cylinders for the A8000.*

It is necessary to be in an open area without people or obstacles around. The parking brake must not be applied.

All calibration can be aborted and, to start a new calibration, all the steps must be performed again from the beginning.

In all the cases in which the calibration is not successful, an aborted calibration information will be displayed to the operator, and thus the calibration must be restarted from the beginning.

NOTE: *Follow the instructions displayed in the monitor.*

To access the calibrations follow:

1. On the main screen choose the *Calibration* icon.
2. Select the *Calibration* key.
3. Choose the desired calibration.

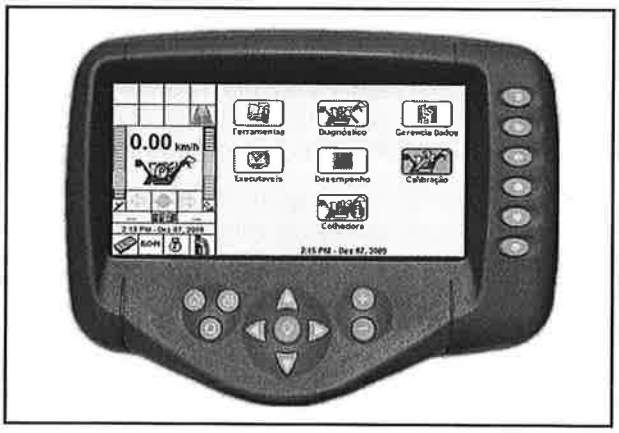

55

Calibration of the pump displacement

1. Select *Pump displacement.*
2. Put the machine in the maximum forward displacement and press *Continue.*
3. Stop the machine and press *Continue.*
4. Next, the software will inform the operator the calibration status.

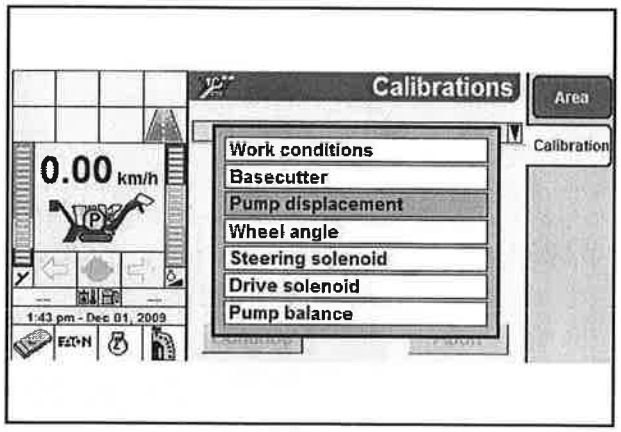

56

Calibration of the pump "Drive solenoid"

1. Select *Drive solenoid.*
2. Align the machine.
3. Put the machine to forward at the speed which the machine starts its constant displacement and press *Continue.*
4. Put the machine to backward at the speed which the machine starts its constant displacement and press *Continue.*
5. Next, the software will inform the operator the calibration status.

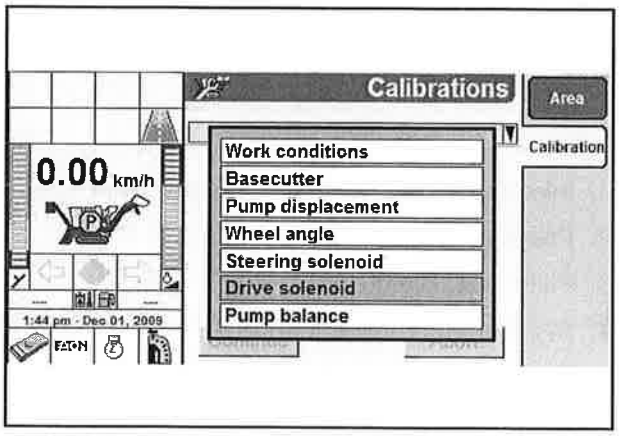

57

Calibration of the wheel angle (A8000)

1. Select *Wheel angle.*
2. Align the wheels and press *Continue.*
3. Turn the machine all the way to the right. When the machine starts the curve, press *Continue.*
4. Turn the machine all the way to the left. When the machine starts the curve, press *Continue.*
5. Next, the software will inform the operator the calibration status.

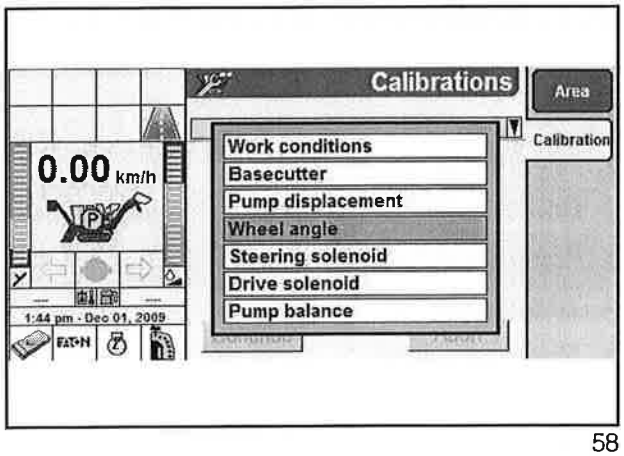

58

Calibration of the machine alignment - steering solenoid (A8000)

1. Select *Steering solenoid.*
2. Align the machine.
3. Put the machine in a constant speed and press *Continue.*
4. Turn the machine to the left. When the machine starts the curve, press *Continue.*
5. Turn the machine to the right. When the machine starts the curve, press *Continue.*
6. Next, the software will inform the operator the calibration status.

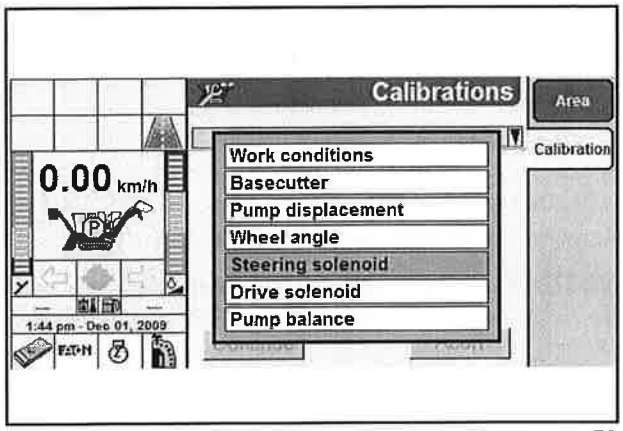

59

Calibration of the machine alignment - Pump balance (A8800)

1. Select *Pump balance.*
2. Align the machine and mark a fixed point.
4. Put the machine to run at a constant speed.
5. Check the alignment and, if necessary, correct it with the joystick.
6. When the machine is running in a straight line, press *Continue.*
7. Next, the software will inform the operator the calibration status.

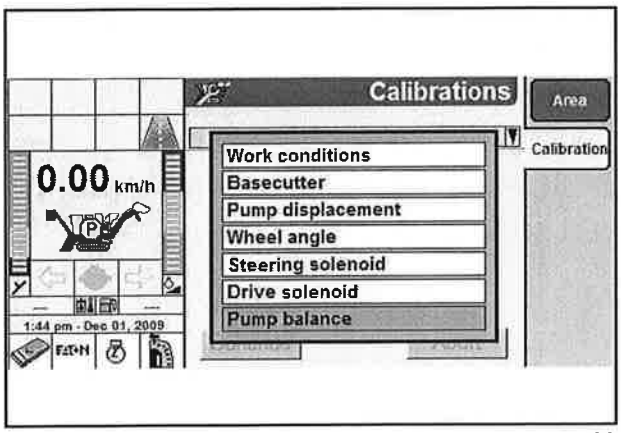

60

Recommended sequence for the calibration

- **A8000**

1. Pump displacement
2. Drive solenoid
3. Pump displacement (repeat)
4. Wheel angle
5. Steering solenoid

- **A8800**

1. Pump displacement
2. Drive solenoid
3. Pump displacement (repeat)
4. Pump balance

NOTE: *Make the pump displacement calibration with the Cruiser engaged.*

CHECKING THE ACCUMULATORS NITROGEN LOAD

Accumulators

The A8800 machine is equipped with two accumulators, one in the basecutter suspension circuit, and another in the topper circuit, which actuate dampening chocks in the hydraulic circuits.

The A8000 machine is equipped with one accumulator only in the topper circuit.

The following procedure presents the steps that must be performed to check and adjust the last type of accumulator used on CASE IH Austoft harvesters.

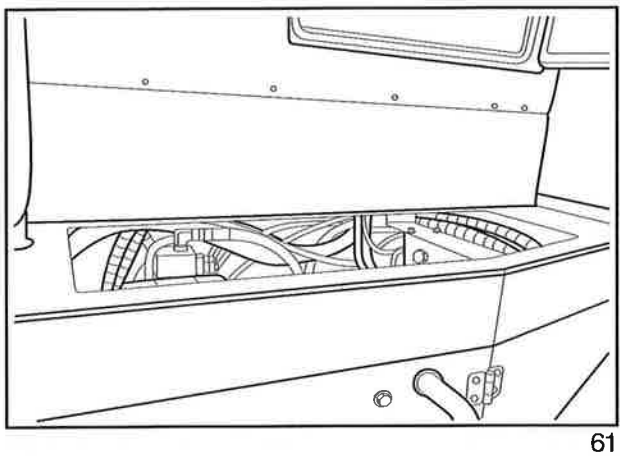

61

Basecutter suspension circuit

1. Shim the machine over the basecutter leg and lower the machine until it is rested over the shim. This will relieve any pressure in the circuit.
2. Remove the anti-slipping cover from the platform to access the accumulator's area.
3. Remove the accumulator connector cover.

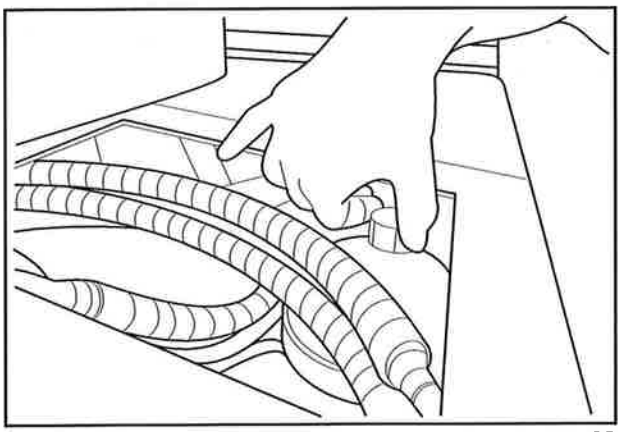

62

4. Unlock the valve slightly from the connector, allowing the device to be connected.

IMPORTANT: *Release the torque with ONLY 1/4 of turn.*

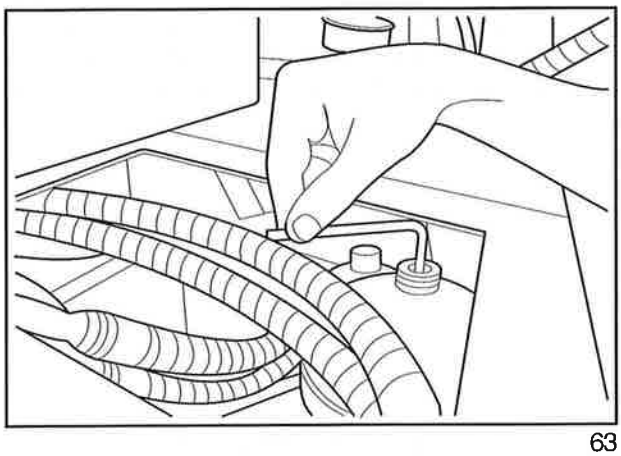

63

5. Disconnect the inlet hose from the accumulator, in order to totally relieve any residual pressure.

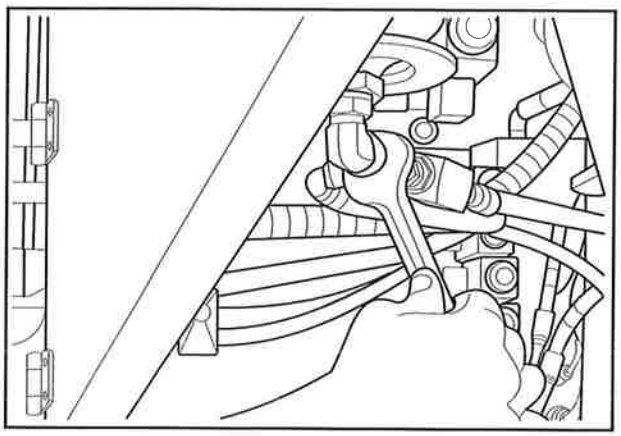

64

6. Release the accumulator support, in order to make the connection with the pressure gauge easier.

NOTE: *If you prefer, remove the accumulator completely and continue the test on the workbench.*

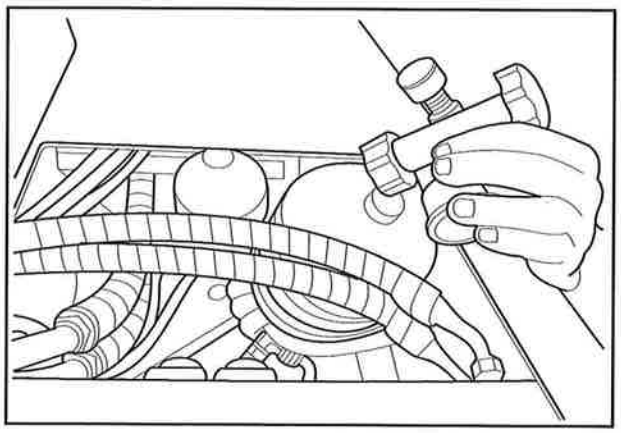

65

7. With the support released, position the accumulator in order to make the pressure gauge fix easier in the accumulator's upper side. The Allen key must be adjusted in the accumulator valve (item 4), so that the gas can be relieved by turning the button "A".

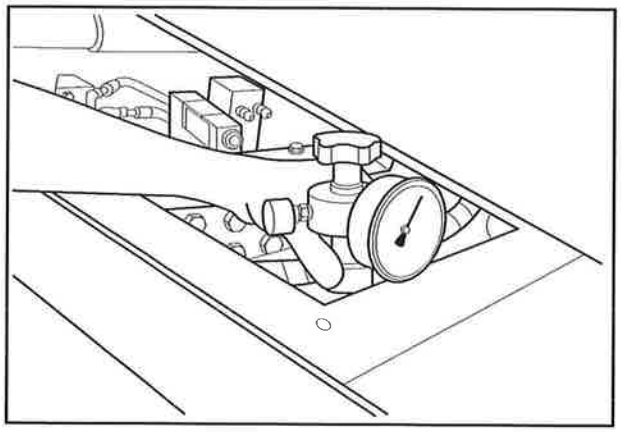

66

8. With the pressure gauge fixed and the hand valve "B" closed, open the hand valve "A" and check the pressure indicated in the pressure gauge.
9. After checking the pressure, adjust the pressure according to the correct calibration, adding or removing gas.

IMPORTANT: *Nitrogen pressure:*

- *Narrow-front machine: 850 psi (58.6 bar)*
- *Large-front machine: 1700 psi (117.2 bar)*
- *Topper: 1200 psi (82.7 bar)*

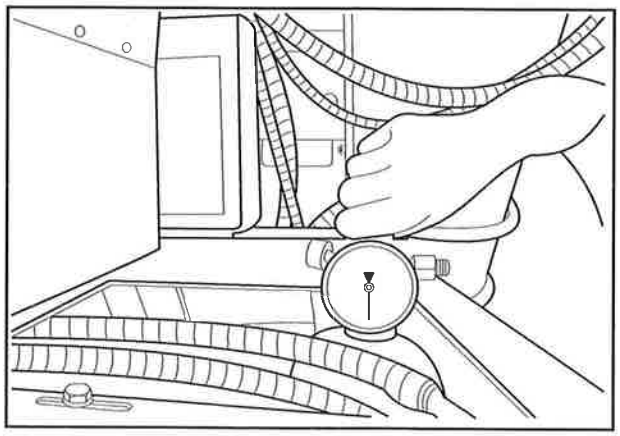

67

To remove the gas, open the hand valve (A) in order to obtain the pressure gauge reading, and then open the hand valve (B) slowly, to relieve the pressure.

By closing the hand valve (B), the pressure gauge will indicate the pressure. When the pressure is correct, close the hand valve (A) and remove the device.

To add gas, connect the nitrogen cylinder to the tools (through a hose).

Open the hand valve (A), in order to obtain the indication of the gas pressure in the accumulator. Open the hand valve (B), to introduce the gas from the cylinder to the accumulator; when the pressure indicated in the pressure gauge is the correct, close the hand valves (B) and (A), disconnect the cylinder and remove the tool.

Reinstall the accumulator cover and reinstall the accumulator in the machine, following the inverse procedure to the removal.

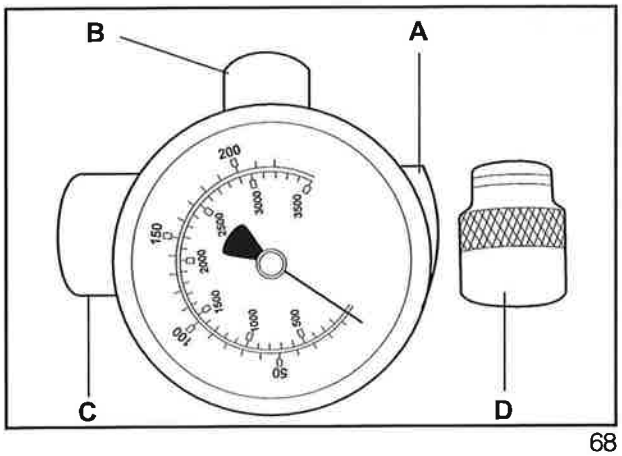

68

A. Button to relieve the valve

B. Button to add / remove gas

C. Connector to the accumulator

D. Adaptation to other accumulators

NOTES:

SECTION 03 - HYDRAULIC COMPONENTS REPAIR

CONTENTS

Section	Description	Page
03	Basecutter Control Manifold	3
	Primary Extractor Manifold	4
	Chopper Control Manifold	5
	Steering Control Manifold (A8000)	6
	Gear Motors (Commercial)	7
	Start-Up Procedure for Pumps	10
	Flow Testing	11
	Hydrostatic Transmission	14
	Eaton Repairs	15
	Charge Pump and Check Valves	17
	Electronic Displacement Control	20
	I.P.O.R. Valve	21
	Steering Cylinder (phasing)	22
	Cylinders	27
	Char-Lynn Motor & Steering Control	35
	Track Adjuster Relief Valve	40
	Accumulator	41
	Counter Valve Balance (A8800) - optional	43
	Positive Drive Valves (A8000)	44
	Topper Manifold	45
	Elevator Manifold	46
	Primary Extractor Manifold	48
	Top Feedroller Proportional Flow Control Manifold	49
	Vickers Manifold - 4 and 6 banks	50
	Notes	52

WARNING: *When performing any service or maintenance on the harvester, always turn off the main switch, located on the floor on the left side of the operator's seat. Before performing any service/repair by using electric welding, turn off the main switch and, if possible, disconnect battery cables.*

BASECUTTER CONTROL MANIFOLD

To overhaul the manifold

1. Remove the manifold.
2. Remove all components from the manifold.
3. Check all 'O' rings and seals as required.
4. Reassemble the manifold and refit to the machine.

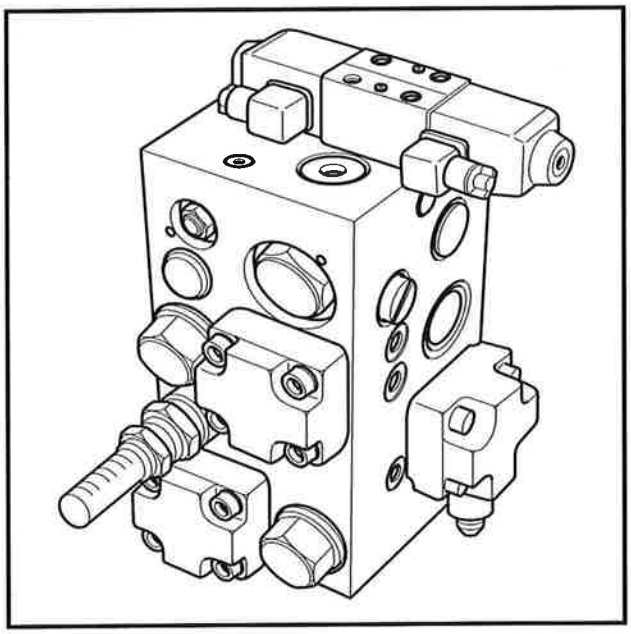

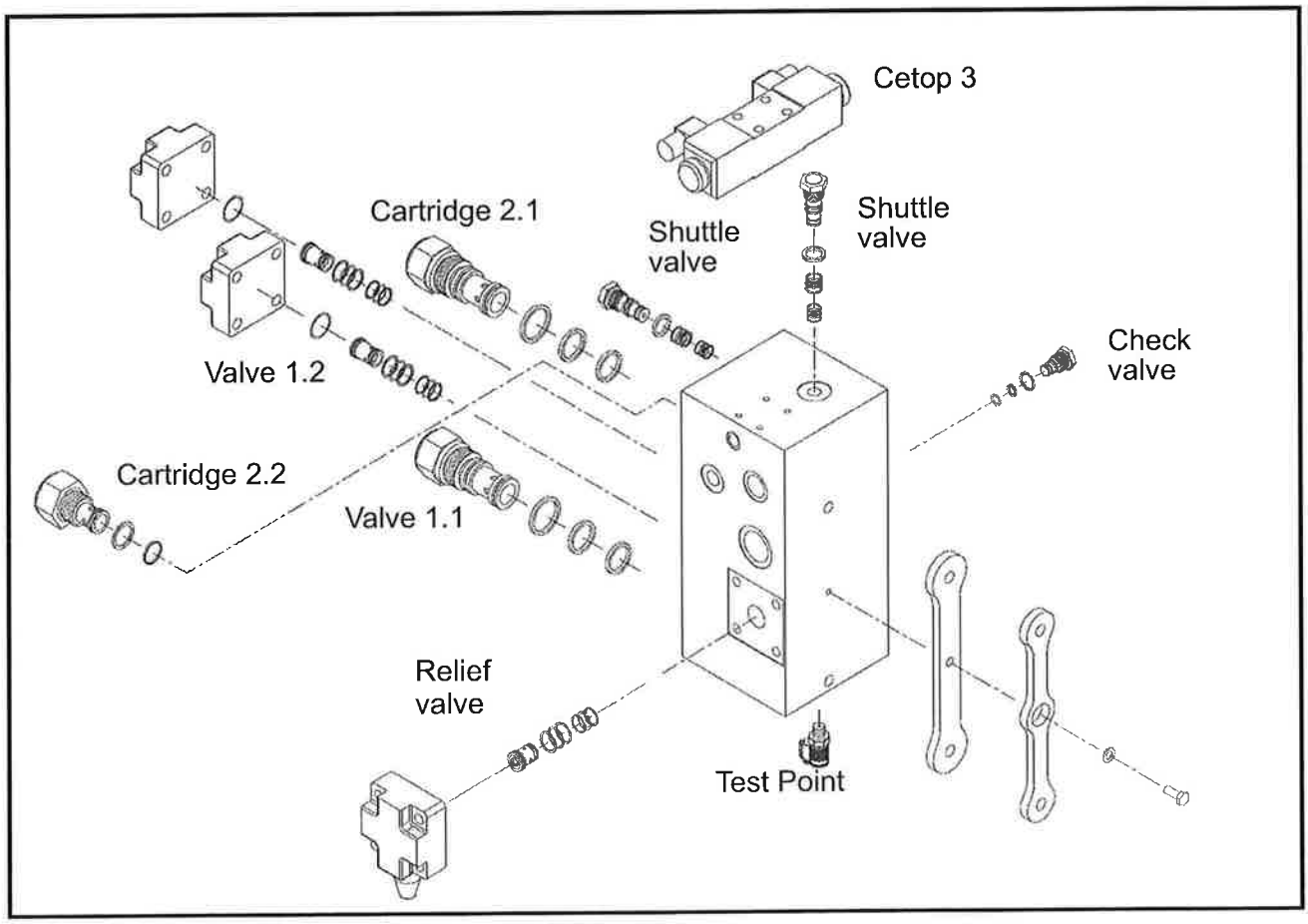

PRIMARY EXTRACTOR MANIFOLD

To overhaul the manifold

1. Remove the manifold.
2. Remove all components from the manifold.
3. Check all 'O' rings and seals as required.
4. Reassemble the manifold and refit to the machine.

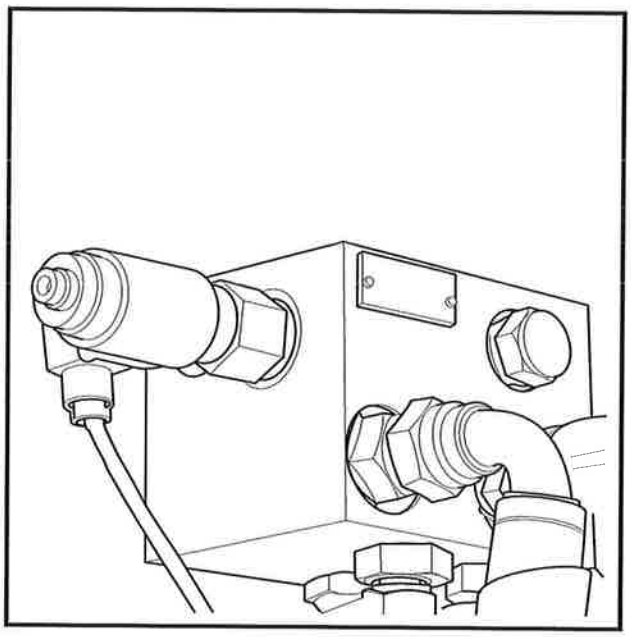

CHOPPER CONTROL MANIFOLD

To overhaul the manifold

1. Remove the manifold.
2. Remove all components from the manifold.
3. Check all 'O' rings and seals as required.
4. Reassemble the manifold and refit to the machine.

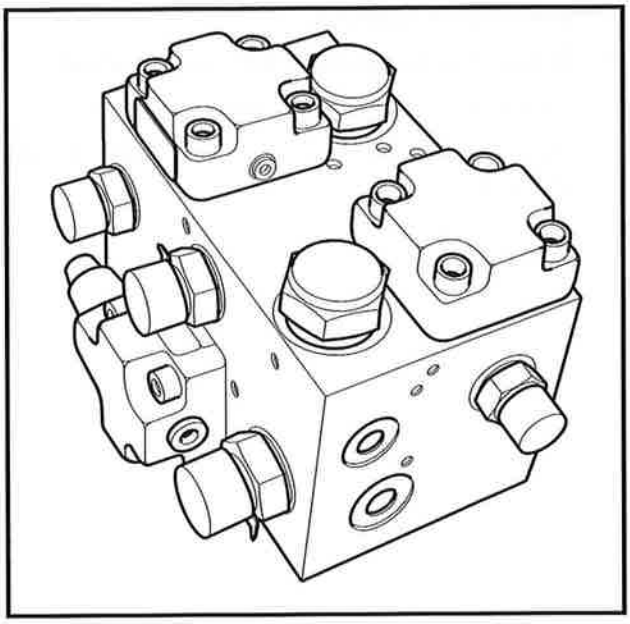

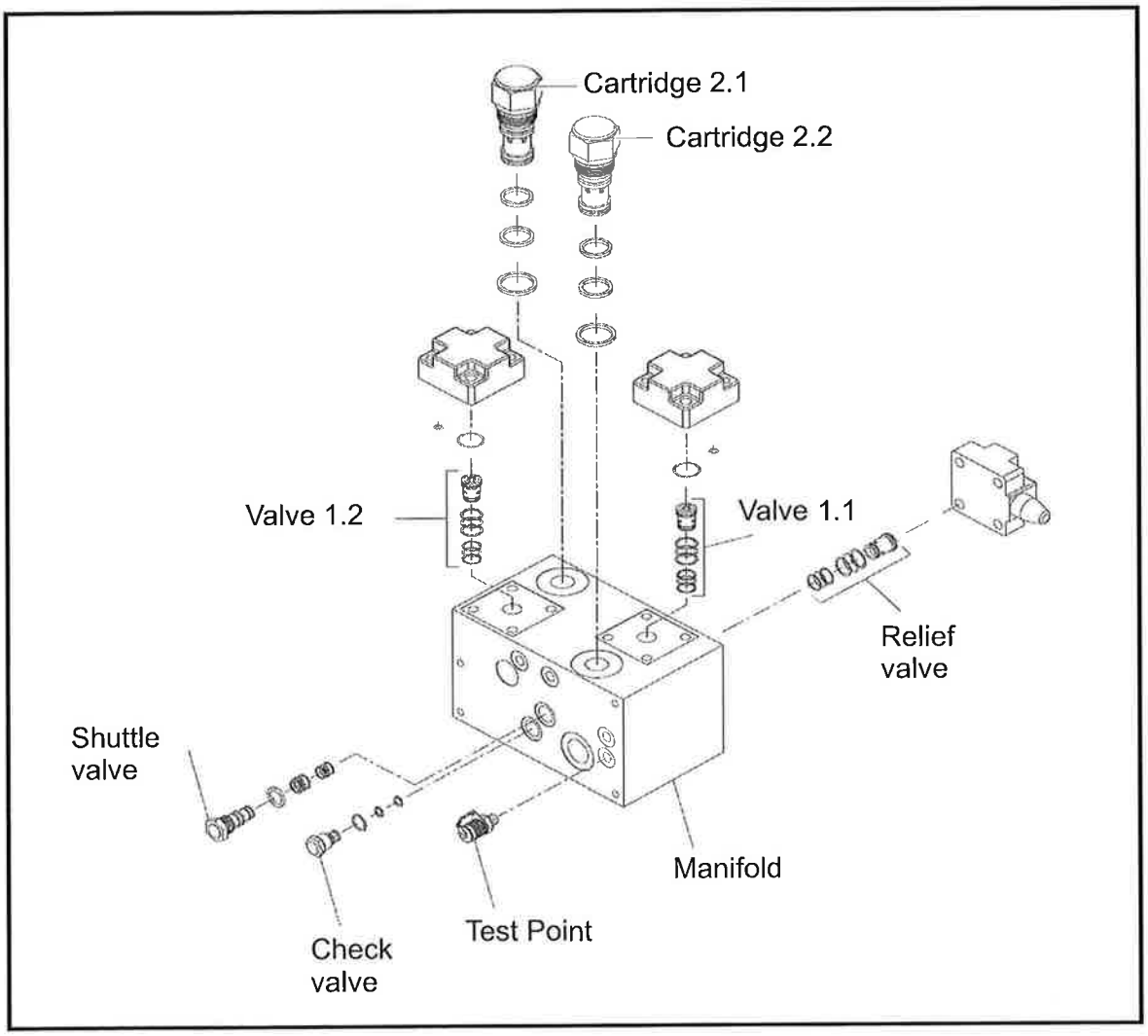

STEERING CONTROL MANIFOLD (A8000)

To overhaul the manifold

1. Remove the manifold.
2. Remove all components from the manifold.
3. Check all 'O' rings and seals as required.
4. Reassemble the manifold and refit to the machine.

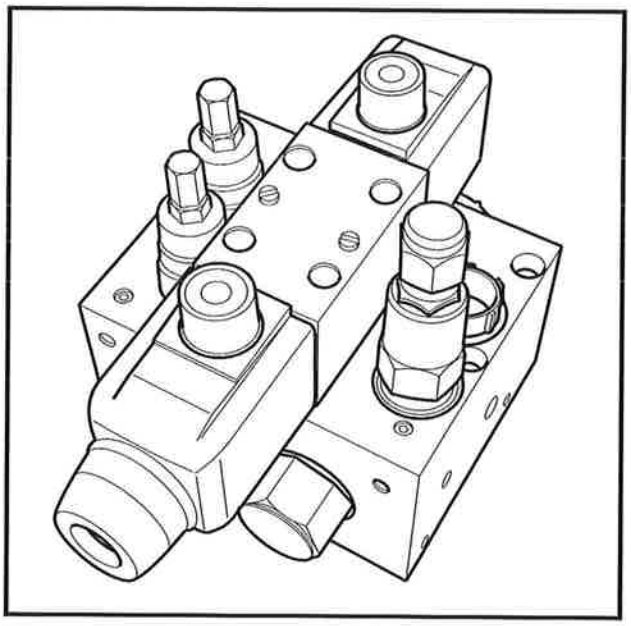

GEAR MOTORS (COMMERCIAL)

These components are used in various locations throughout the harvester in single and multiple bank units acting as flow dividers. The operating principal and general construction of all Gear pumps/motors used on the harvester are similar.

The unit comprises of a set of hardened steel gears, meshing together and running in a cast housing. The gears are supported by either bushes or bearings depending on the model. The ends of the gears are sealed by pressure compensated thrust plates.

To dismantle a unit

Place the unit in a vice with the drive shaft pointing down. Match mark all sections for easy assembly. Undo the 4 retaining bolts/nuts, and dismantle the pump, section by section making sure to keep all matched components together.

To assemble a unit

Clean all components ensuring that they are free from damage or wear (no nicks or burrs). Replace all seals, bearings and thrust plates where necessary.

Place the mounting flange in the vice, and assemble the unit from the bottom up, ensuring that match marks line up. If new housings are fitted, ensure these are installed correctly.

When the assembly is completed, torque the bolts/ nuts to 200 Ft. bs. (30, 50, 51, 350.) and 450 Ft. lbs (M365).

NOTE: Each through bolts on multiple units have 3 'O' rings at every bearing section to prevent failure. Please ensure these are refitted during overhaul.

NOTE: Before fitting unit to working position apply either Loctite never-seize, CASE IH Austoft Part Number CM801158 or Molybdenum Disulphide Grease to the drive splines. This minimizes spline wear and aids in easy removal.

Wear tolerances for components:

Gear Drive Shafts:
0,002" in seal area of drive coupling.

Thrust Plates:
0,002" wear on faces or damage.

Bushings:
Should be replaced if gears are replaced. Installed .002" - .003" below the face of the housing.

Bearings:
Damage or pitting (service life)

Gear Housings:
M350, M365 - 0,007" cut out in suction side.

Gear Housings:
M50/30 - 0,005" cut out in suction side.

Stack Clearances:
M350 - 0,004" to 0,007".

For additional informations abour Commercial engines repair, consult the manufacturer Service Manual.

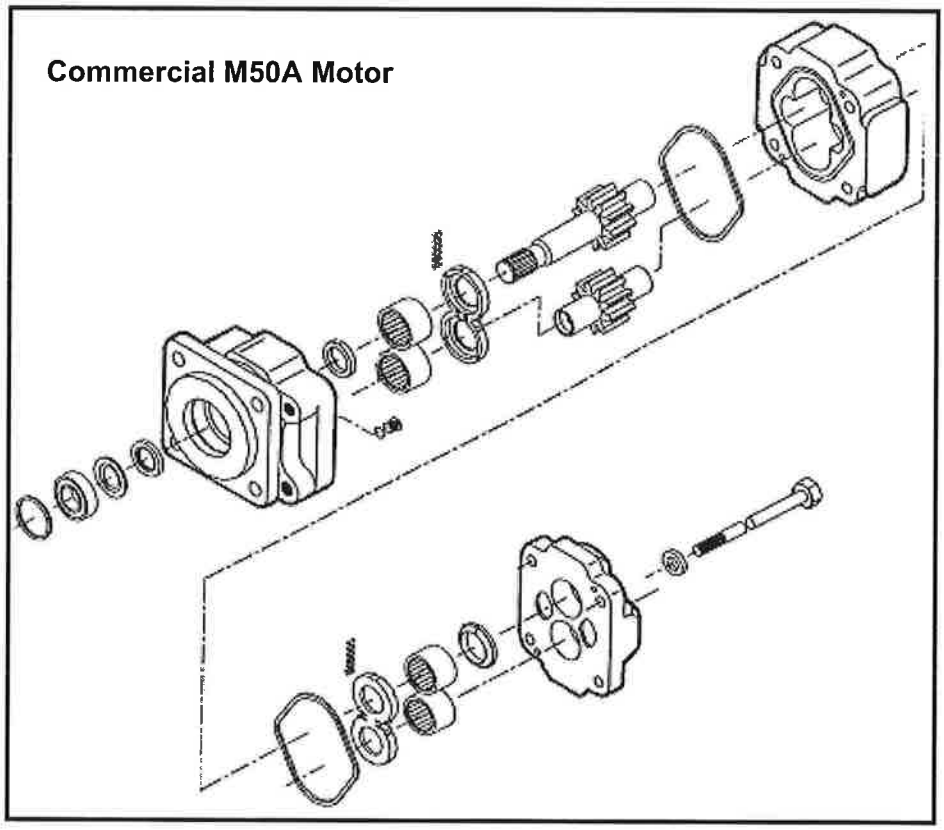
Commercial M50A Motor

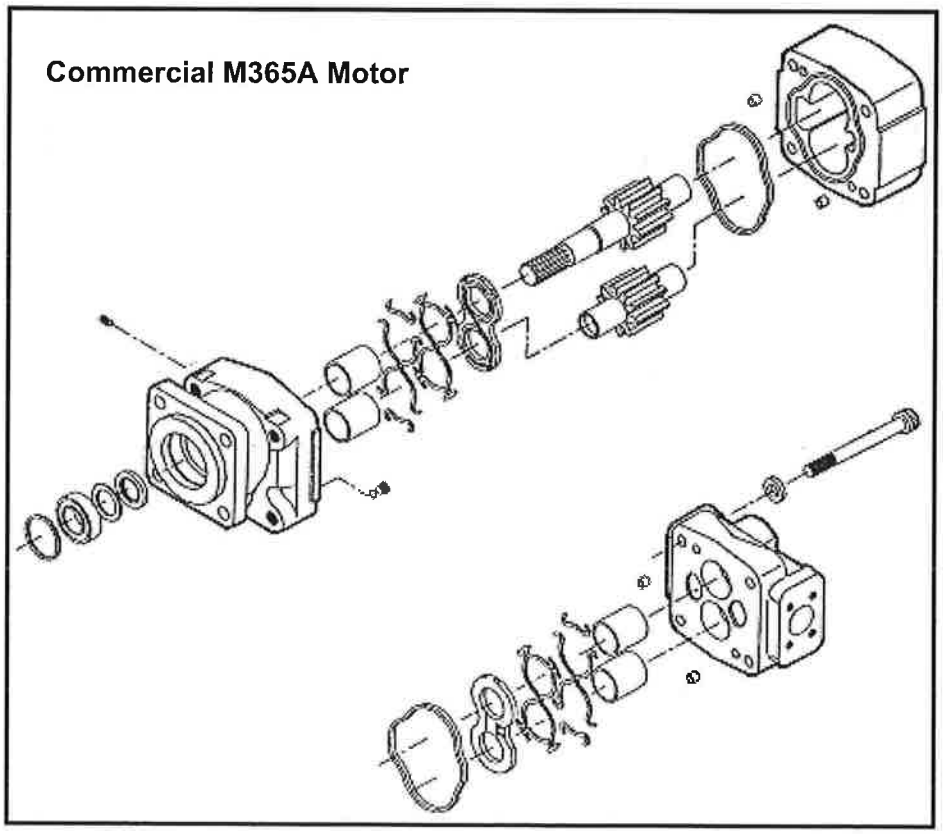
Commercial M365A Motor

Commercial M31 Motor

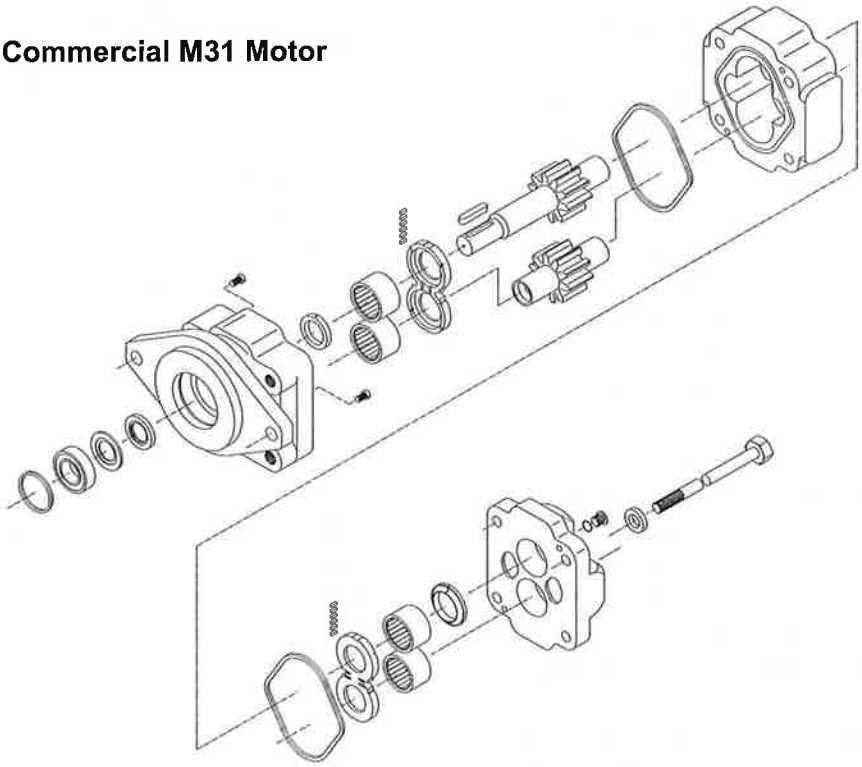

Commercial M51B Motor

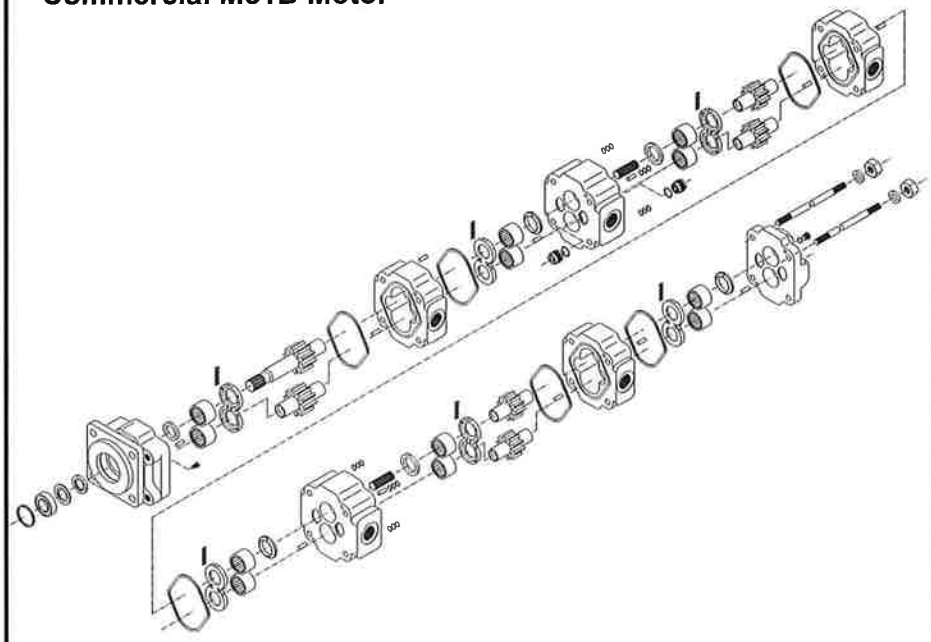

START-UP PROCEDURE FOR PUMPS

All pumps MUST be started by this procedure:

1. Lubricate drive splines with Loctite Never-seize. Aust. Part Number CM801158.

NOTE: *Clean all flange threads and mounting bolts.*

2. Apply Loctite Ultra Blue silicon sealant to the pump flange.
3. Mount the pumps to the gearbox.
4. Connect the hydraulic pipes and hoses ensuring that all fittings and hose clamps are tight to prevent oil and air leaks. Ensure the 2 header tank valves are open.
5. Fill the oil tank to the correct level with clean hydraulic oil.
6. Remove the 9/16" JIC cap from the top of the hydraulic suction manifold, and release all the air trapped in the manifold. Replace the cap.
7. Remove the 9/16" JIC cap from the top of the transmission suction pipe and, release all of the trapped air in the pipe. Replace the cap.
8. Check the oil level in the header tank and top up if necessary.
9. Crank the engine over for a short period with stop out to prevent starting (5 - 10 secs). Then check the bleed nipples as in [6] and [7], to remove any air which has been trapped in the pipes. Crank the engine again (5 - 10 secs) then check the bleed nipple for air, if air is still present crank the engine and bleed the system until no air is present before continuing.
10. Thoroughly check all suction pipes and clamps for any signs of leaks.
11. Start the engine and run at idle for about 5 - 10 minutes, checking for leaks at all connections, both pressure and suction.
12. Stop the engine and check the pump bolt tension is correct - 200 ft.lbs. (Commercial).
13. Start the engine and run the system in neutral nothing engaged. Increasing the engine revs in steps of 500 RPM until high idle is reached. Run for approximately 5 minutes each step.
14. Lower the engine revolutions to approx. 1200 RPM , and slowly engage the various circuits one by one until all functions are operating (free running pressure).
15. Increase the engine revolutions in steps of 200 RPM holding the revolutions for approximately 5 minutes between each step until high idle is maintained.
16. After completing the procedure detailed previously, the oil should be within operating temperature 60 - 90ºC. If not, continue with functions engaged until operating temperature is reached. If so, place the controls in neutral and lower the engine revolutions to low idle and stop the engine as detailed in the Operator's Handbook.
17. Recheck the fittings and suction clamps for leakage or looseness.
18. The machine can now be put to work.

NOTE: *Where possible, do not overload any of the circuits.Operate at a slower rate to ensure working pressures are not in the upper levels. The pumps do "run in" and experience has shown that after approx. 200 tonnes the pumps will be capable of maximum performance.*

NOTE: *Do not stall any circuits to increase oil temperature as this aerates the oil excessively which will damage pumps.*

NOTE: *Do not use flow meters to load circuits.*

FLOW TESTING

Flow testing hydraulic circuits is the only accurate method of determining the condition of various hydraulic components within the system.

To test flow successfully, you will need an accurate flowmeter, and a means of measuring oil temperature and engine RPM. When using the flowmeter, all relevant data should be recorded so that it can be compared to the manufacturers specifications when assessing the components.

As well as determining hydraulic pump conditions, the flowmeter can be used to measure leakage through valves, motors etc., to assist in resolving hydraulic problems.

When connecting the flowmeter into the circuit, be sure that your meter can be back pressured. If not, a line must be returned directly to tank. A flowmeter which can be placed within the existing circuits is preferable.

When connecting the meter, try to install it "next in line" to the pump. This will eliminate any loss of flow through other components. Where more than one oil path exists, positively plug or cap the alternative lines.

With the meter connected "next in line" to the pump, there will be no relief valve between the pump and the load cell of the meter. Always ensure that the load cell is fully open and that there is a clear path from the meter to tank.

NOTE: *Some meters have a safety disc which will rupture to prevent damage to the meter, however this safety factor is generally above the limits of the hydraulic pump.*

With the flowmeter installed, the test can be commenced. Start the engine, and set the throttle to obtain the specified RPM.

Run the machine until the oil has reached a suitable temperature. Record the engine RPM temperature, pressure and flow. At this point, the pressure should be zero or minimal pressure.

Increase the pressure by adjusting the load cell. When the pressure has reached a predetermined figure, { eg. 1000 PSI } record all the data as before.

Carry out this procedure several times in set increments of pressure, until the maximum operating pressure of the pump is reached.

At each step, record all data as before. After the test has been completed, compare the figures obtained during the test to the specifications supplied in this manual.

From this information a decision on the condition of the pump can be made.

As a rule more than 10% loss in pump efficiency indicates that the pump requires overhauling.

All flow tests should be carried out with hydraulic oils at 82°.

Engine Revolutions for Flow Tests:

Scania DS11: 2100 rpm

CASE 10.3 l : 2100 rpm

Cummins M11 : 2100 rpm

Cummnis QS11: 2100 rpm

WARNING: *There is no relief valve protection offered to the hydraulic pump when a flow meter is placed 'next in line' in the circuit. Always ensure that load cell in the flow meter is fully open and there is no restriction to the tank.*

When flow testing hydraulic circuits, to monitor pump performance, the following steps should be observed:

1. Connect the flow meter into the circuit to be tested. Refer to flow meter testing circuits.
2. Before starting the machine, check the following:
   c. Check that the load cell (knob) on the flow meter is fully open.
   d. Check that the flow meter is set correctly (see adjust).
   e. Check that the hydraulic oil level is correct.
   f. Check that all connections are tight.
   g. Check that the header tank taps are turned.
   h. Crank the engine, without starting, for ten (10) seconds and recheck hosing and leaks.

3. Start the engine and set the throttle to the desired RPM.

NOTE: *Check hydraulic oil temperature, if low run other machine functions until correct oil temperature is obtained.*

WARNING: *Do not stall circuits or load up circuits with the flow meter valve to heat up the oil. This causes aeration of the oil and subsequent hydraulic pump damage.*

4. Increase the load shown on the flow meter pressure gauge by slowly turning the load cell knob in.When 1000 PSI load is reached record the flow shown on the flowmeter gauge.

NOTE: *As each increase in load is read it is also necessary to adjust the engine RPM accordingly, so each flow is recorded at the same (desired) engine RPM.*

Record flows at 0, 1000, 1500, 2000, 2500, 3000 P.S.I. and finally again at zero P.S.I.

5. Remove the flow meter from the circuit and reconnect hoses.

NOTE: *If further pump flow tests are to be performed leave the flow meter outlet connected to the return manifold as this position is suitable for further tests.*

6. After reviewing the flows obtained by testing the pumps, the conclusion to whether the pumps need repair or not is known.

To further diagnose problems the flow meter can be used to determine flow loss through controls valves etc. by measuring flows both sides of the suspect component.

Hydraulic Pump Flow Test Report

Machine Serial Nº: .....

Hydraulic Pump:

Model: ..... Pat Nº: ..... Serial Nº: .....

Type of oil: ..... Brand: ..... Grade: .....

TEST RESULTS

PRESSURE	FLOW	ENGINE RPM	TEMPERATURE
0 PSI			
1000 PSI			
1500 PSI			
200 PSI			
2500 PSI			
3000 PSI			
0 PSI FINAL CONTROL			
CASE IH SPECIFICATIONS			

REMARKS:

.....
.....
.....
.....
.....
.....
.....
.....
.....

Date of test: ..... / ..... / .....

Serviceman: .....

HYDROSTATIC TRANSMISSION

The transmission on the A8000 harvester is the Eaton hydrostatic type, using 2 FC54 variable displacement pumps driving 2 x FC54 fixed displacement motors (one pump / motor combination for each drive wheel). The both pumps are operated by one control lever.

The two circuits are connected in parallel through solenoid operated valves, to give a differential capability to the drive.

Positive drive is obtained by closing the solenoid operated valves and creating two independent circuits.

This allows equal, positive drive to both wheels.

The A8800 model harvester has two FC54 variable displacement pumps, driving two FC54 fixed displacement motors (one pump driving one motor).

Operation

When the control is actuated, oil is directed to servo cylinders which change the angle of the swash plate.

This increases the length of the stroke of the axial pistons, which displaces more oil thus increasing flow.

Flow is reversed by angling the swash plate the other way. The oil circuit is a closed loop system, the oil from the pump flowing to the motor then returning to the pump.

Charge Pump Circuit

Controlled oil loss from within the loop, is used to lubricate and cool the transmission circuit.

This controlled oil loss is replenished by the charge system, which charges the loop via check valves and also operates the servo control cylinders.

The charge pump is mounted on the end of the axial piston pump and is gerotor type, drawing oil supply through a double cartridge suction filter.

Pressure is controlled by two relief valves. One is located in the charge pump body and is set at 330 +-25 PSI.

This operates in neutral only and relieves oil in the main pump body to carry out its cooling function, then returns to tank.

There is a second relief mounted in the motor manifold block which is introduced to the low pressure side of the loop when the transmission pump is stroked in any direction, by way of a spring centred shuttle valve, also located in the motor manifold block. Note: the shuttle is biased by placing a heavier spring in the rear of the valve block.

This relief is set at 270 +-25 PSI, as there must be a minimum of 40 PSI difference between the two reliefs.

This allows charge oil to be dumped into the motor before returning to tank, via the main pump body, ensuring maximum cooling when the transmission is operating.

EATON REPAIRS

Shaft seal replacement (lip seal)

NOTE: The serial number of the Eaton pumps and motors changed when the lip type seal was introduced.

- 5.4 cu-ins. Pump Mechanical Seal. 5421- 611
- 5.4 cu-ins. Pump Lip Seal. 5423 - 761
- 5.4 cu-ins. Motor Mechanical Seal. 5431-110
- 5.4 cu-ins. Motor Lip Seal. 5433-110

To remove and install the lip type seal, use the following procedure:

1. Remove the pump or motor from the machine.
2. Seal all openings to prevent contamination from entering the component.
3. Clean and dry the input shaft/mounting flange area as required.
4. Remove the retaining ring from the body of the pump/motor housing bore that retains the shaft seal (figure 1).
5. Using a punch and hammer, carefully punch a hole in the old shaft seal metal retainer. Use care not to damage the input shaft (figures 2 & 3).
6. Using a 3" (76mm.) sheet metal screw with the point blunted, install the screw into the punched hole just enough to pull the existing seal out of the bore.
7. Remove the sheet metal screw.
8. With a flat screwdriver installed behind the seal, carefully pry the seal out. Be careful that the input shaft is not damaged by the screwdriver blade (figure 7).
9. Clean the shaft and housing bore as required.
10. Lightly grease the surface of the seal which contacts the input shaft.
11. Press the new greased seal over the installation tool bullet with the closed face of the shaft seal facing the closed end of the bullet.
12. With the shaft seal properly seated on the bullet, carefully slide the installation tool over the input shaft and up to the sealing surface area.
13. Using the installation tool driver and a mallet, push the seal into the bore untill the driver bottoms on the mounting flange.
14. The shaft seal kit comes with a shaft seal, retaining ring and spacer. The spacer is only required for units that have extensive use in the field. The purpose of the spacer is to put the seal in a new location on the shaft sealing area. If using the spacer, install the spacer between the shaft seal and the retaining ring.
15. Remove the installation tool and driver.
16. Install the new shaft seal retaining ring (included in the kit) into the housing bore. Using the installation tool driver and mallet, push the seal, washer (if required) and retaining ring into the bore until the retaining ring snaps into the groove.
17. Reinstall the pump/motor to the machine.

NOTE: *The new seal design CANNOT be used on units fitted with the mechanical seal.*

Seal installation tool P/N CAS 2867.

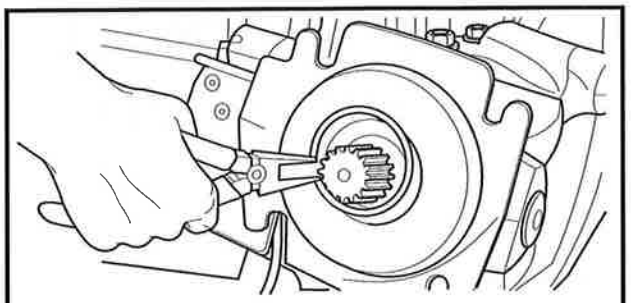

Figure 1

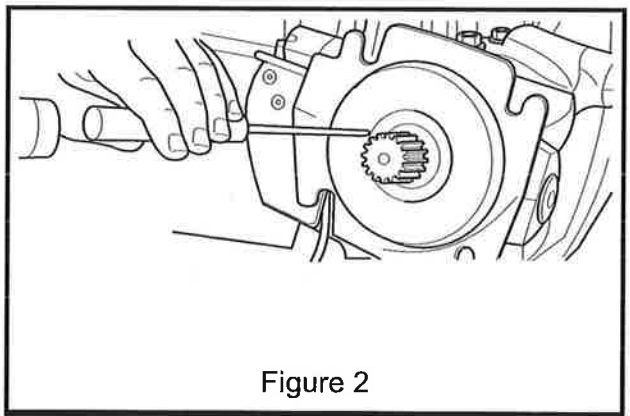

Figure 2

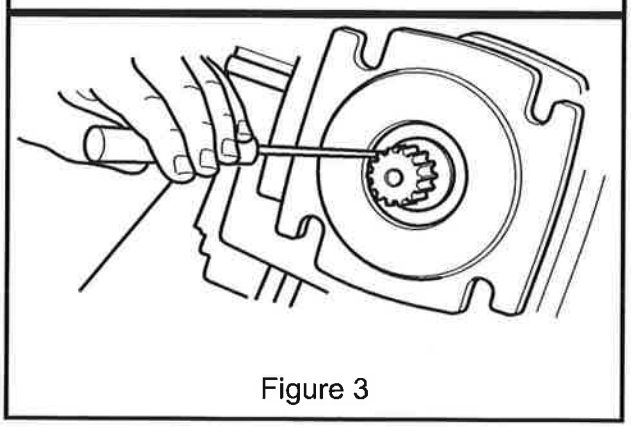

Figure 3

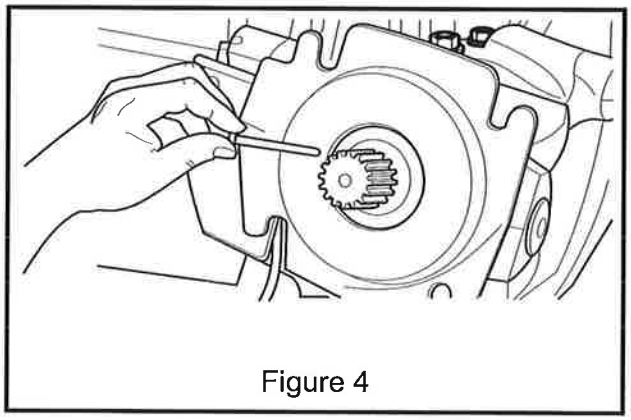

Figure 4

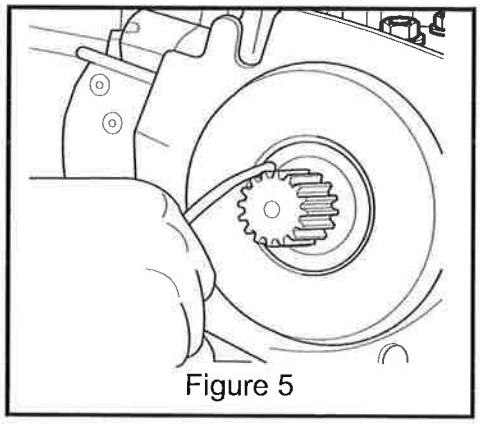

Figure 5

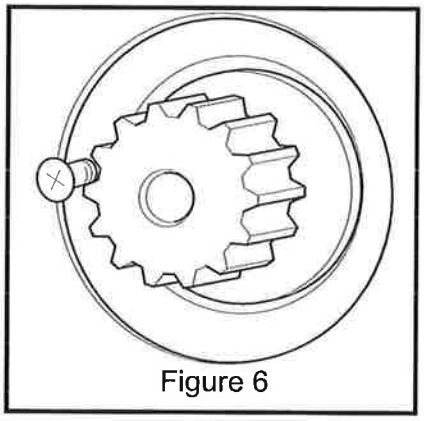

Figure 6

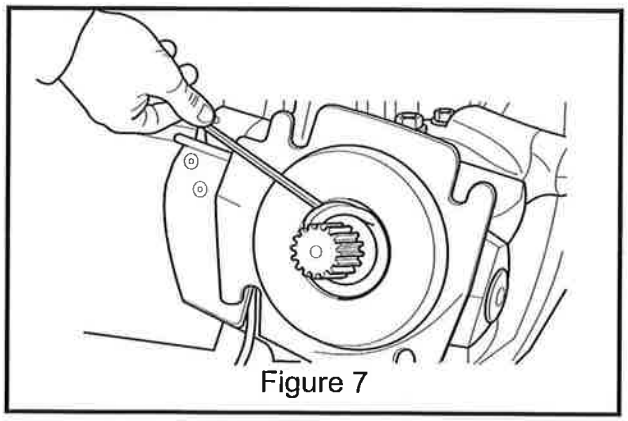

Figure 7

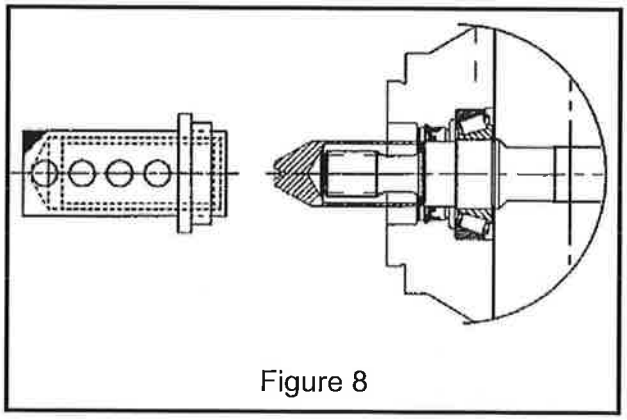

Figure 8

CHARGE PUMP AND CHECK VALVES

1. Remove only the four outside corner cap screws from charge pump (figure 1).

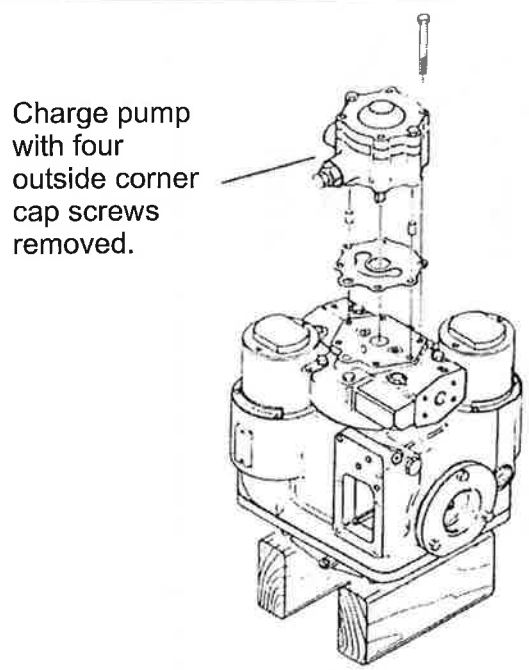

Figure 1

2. Remove charge pump assembly, charge pump gasket, and dowel pins from pump end cover.

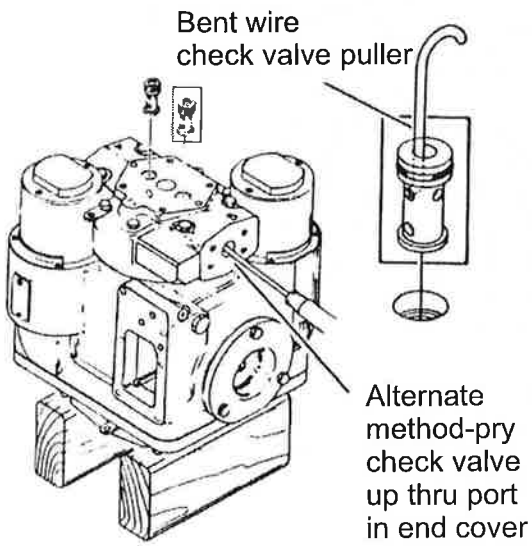

Figure 2

3. Remove the two check valve assemblies by inserting check valve puller (figure 2) into valve crosshole. Pull valve from pump end cover.
4. Remove O-Rings and back-up ring from check valve assemblies and discard.

NOTE: *Use extreme care when handling internal parts as they have close tolerances.*

5. Lubricate and install O-Rings and back-up rings on check valve assemblies. Back-up ring must be installed on outward side of O-Ring. See figure.
6. Reposition and support pump assembly on mounting flange. Install check valve assemblies in end cover. Check valves must be flush with cover surface.
7. Install two dowel pins in end cover. Install charge pump gasket, aligning gasket with end cover porting.
8. Install charge pump assembly, align it with dowel pins in end cover. Also align tang on end of charge pump shaft with slot in pump shaft subassembly.

NOTE: *Some optional charge pump assemblies are spline driven by a coupling located between pump shaft subassembly, and charge pump shaft.*

9. Install cap screws in charge pump and tighten them to 16 lb-ft [22Nm]. Torque screws in star pattern. Then torque each screw a second time to compensate for gasket compression set. For charge pump with A or B pad mount, tighten screws to 22 lb-ft [30 Nm] and torque screws a second time.

For further information regarding repair to the Eaton Transmission refer to the Eaton Repair Manual.

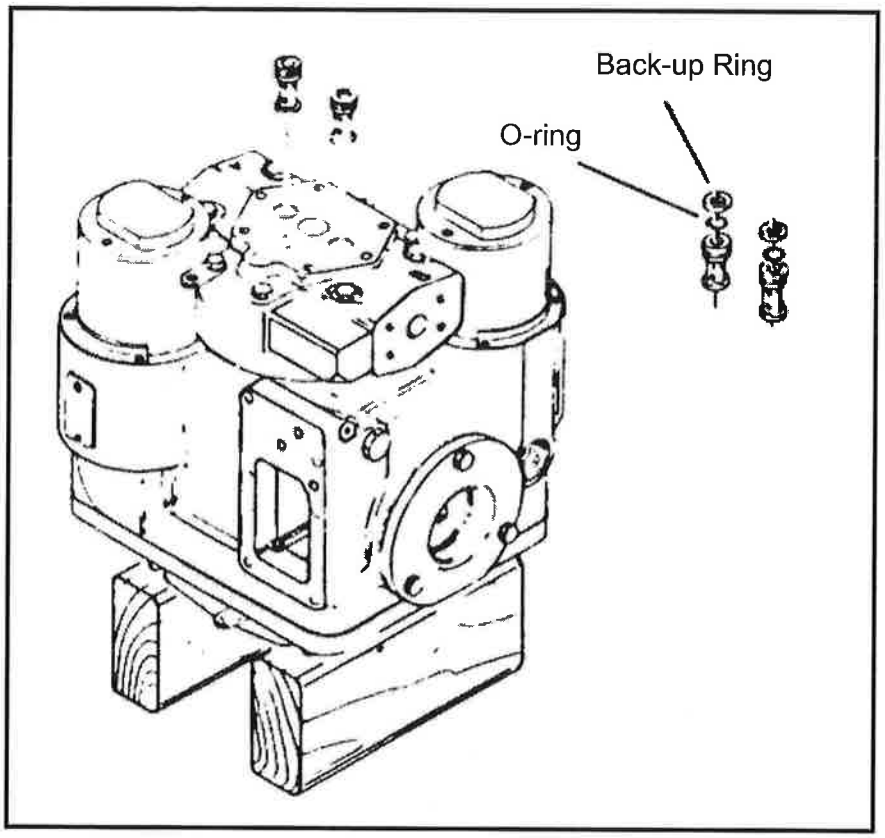
Back-up Ring
O-ring

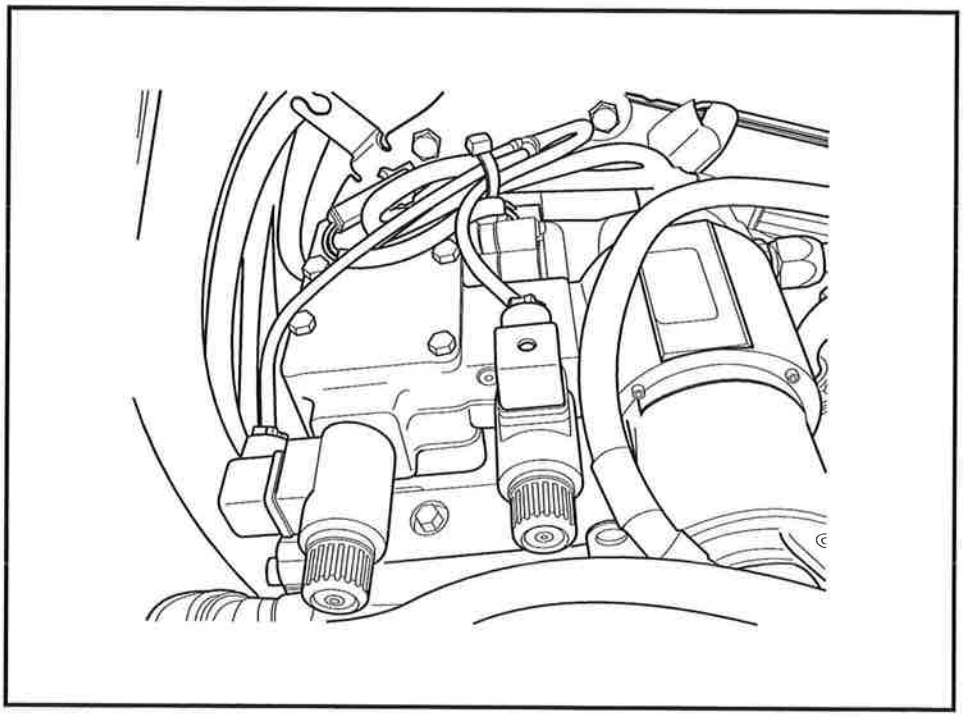

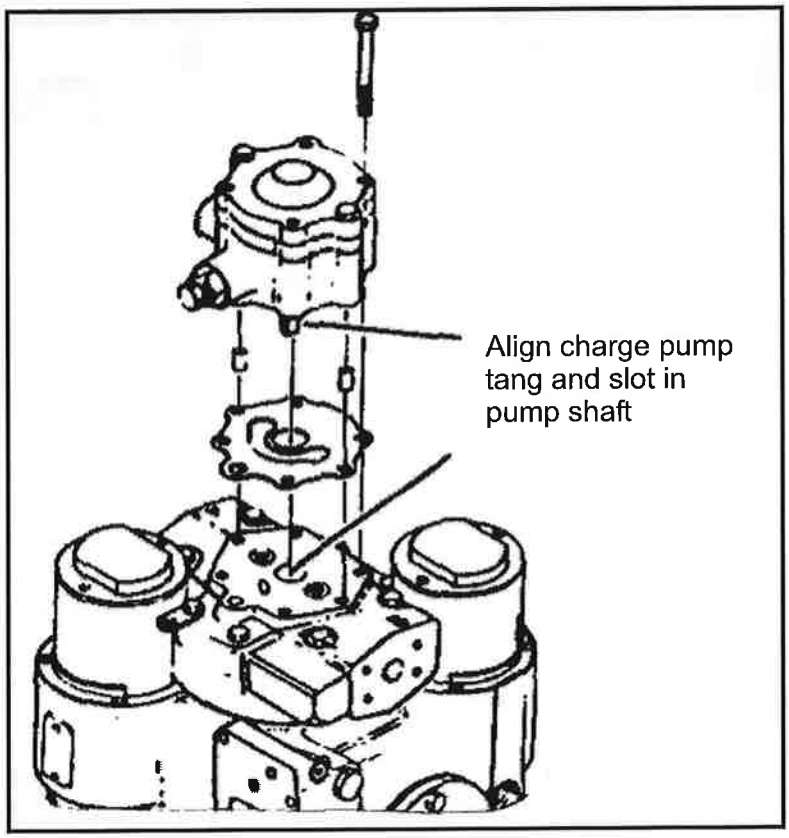
Align charge pump
tang and slot in
pump shaft

ELECTRONIC DISPLACEMENT CONTROL

The electronic displacement control is located on the transmission pump, and controls the oil flow to the servo cylinders.

When the machine traction is activated by means of an electronic signal received from the traction module, the oil comes into the governor through (P) and flows into the servo cylinder through ports (S1) and (S2), depending on the machine displacement requested by the operator.

Fitting instructions

Install control valve gasket on housing, align cap screw and porting holes. If control orifice was removed, insert it now in recess located in control body. Raised portion of orifice (top of hat) must point away from control housing.

Install square cut seal ring to keep orifice in place.

NOTE: *This orifice is located under the charge pump on Austoft applications.*

Install control valve assembly, aligning feedback linkage pin with swashplate link. Slide control valve assembly over to engage linkage assembly. Carefully set control valve assembly on housing, make sure swashplate link points toward end cover.

Install six cap screws in control valve housing and tighten them to 16 lb - ft [22 Nm]. Torque screws in star pattern. Then torque each screws a second time to compensate for gasket compression.

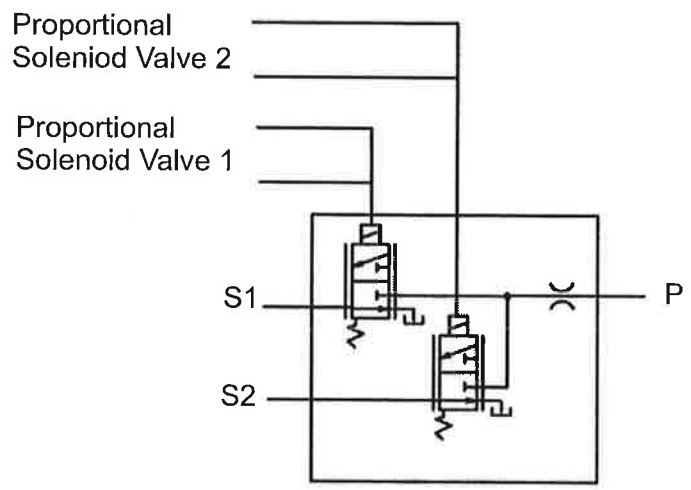

Solenoid Control

I.P.O.R. VALVE (INTERNAL PRESSURE OVERRIDE)

The internal pressure override is incorporated as an integral part of the pump end cover. Its function is to prevent the high pressure relief valves from operating continuously.

The IPOR valve is spring biased to the open position, with system pressure monitored in both directions by two sensing pins which act against the IPOR spool spring.

Control Pressure supplied by the charge pumps flows through an orifice in the pump end cover, then past the IPOR spool before reaching the manual displacement control valve.

The IPOR setting is 1200 PSI lower than the system relief valve setting.

Whenever system pressure exceeds the IPOR setting, system pressure reacting against the sensing pins will shift the IPOR spool closing off control pressure to the displacement control valve, therefore allowing servo pressure to drain back to tank.

Whenever control pressure is interrupted, the spring force of the servo pistons will return the variable swashplate back towards the neutral position.

As long as system pressure demand remains above the IPOR setting, the IPOR spool will meter the control pressure to maintain the IPOR system pressure setting.

When the system pressure demand is removed, the IPOR spool will return to the open position, allowing oil to flow to the displacement control which then returns the variable swashplate to its previously set position.

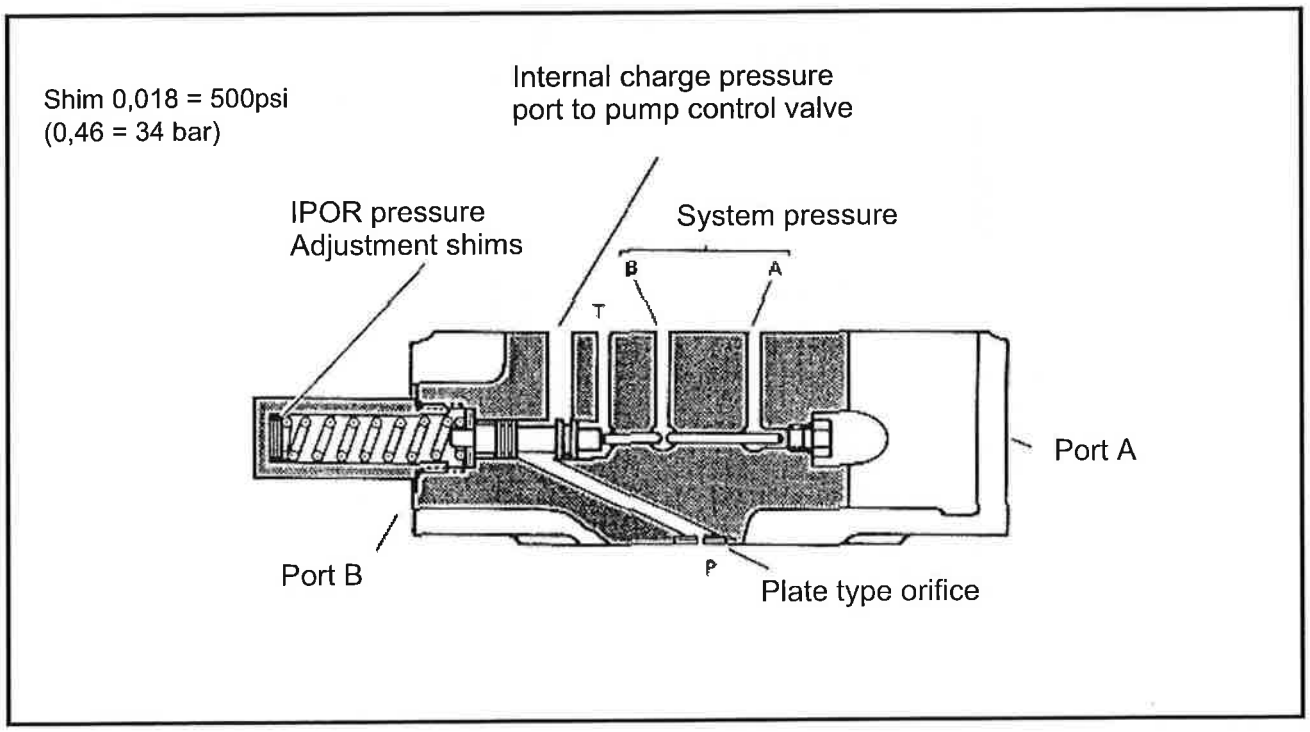

STEERING CYLINDER (PHASING)

The steering circuit on the A8000 (rubber tyred machines) are fitted with a steering manifold which supplies this flow to 2 phasing cylinders.

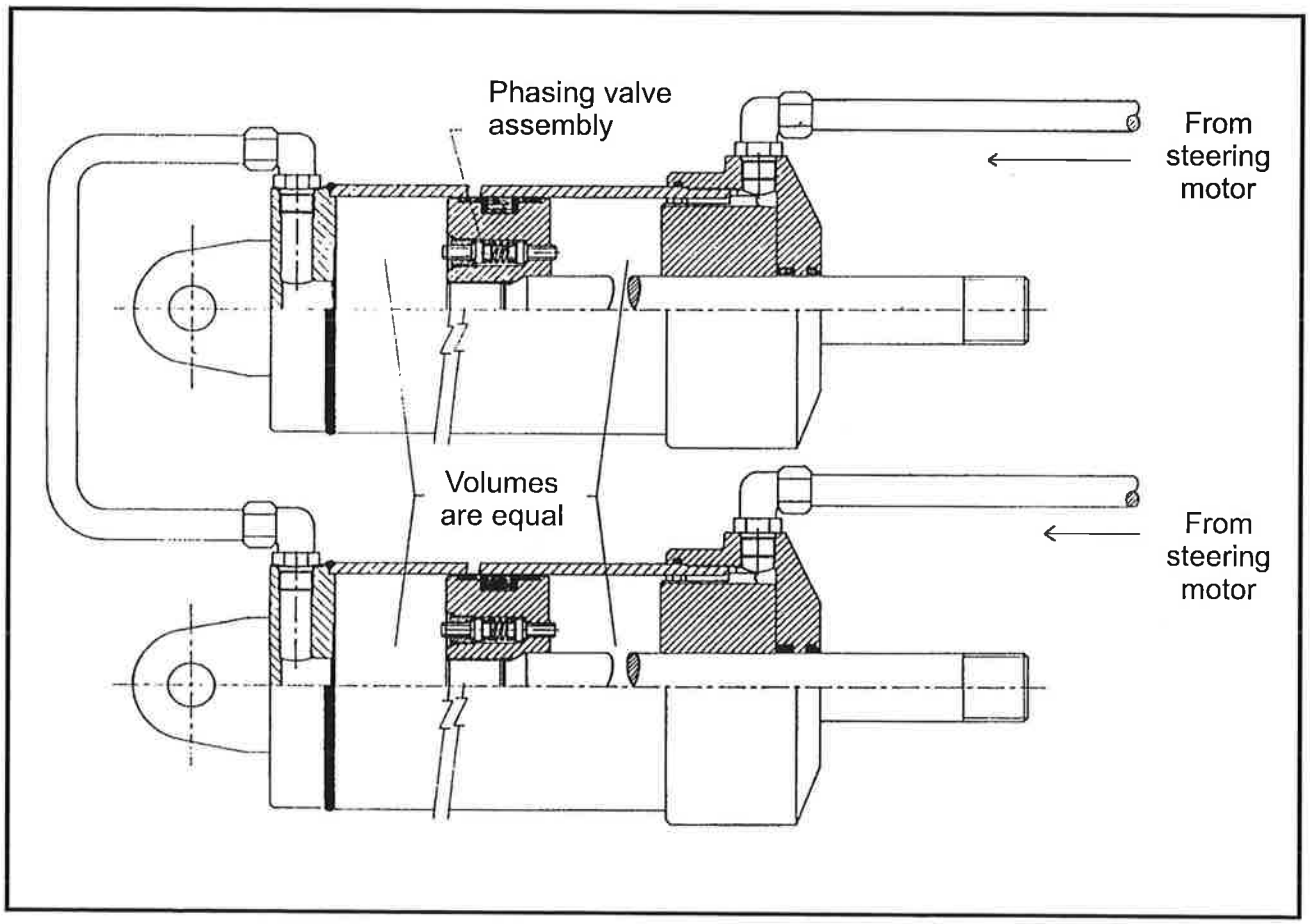

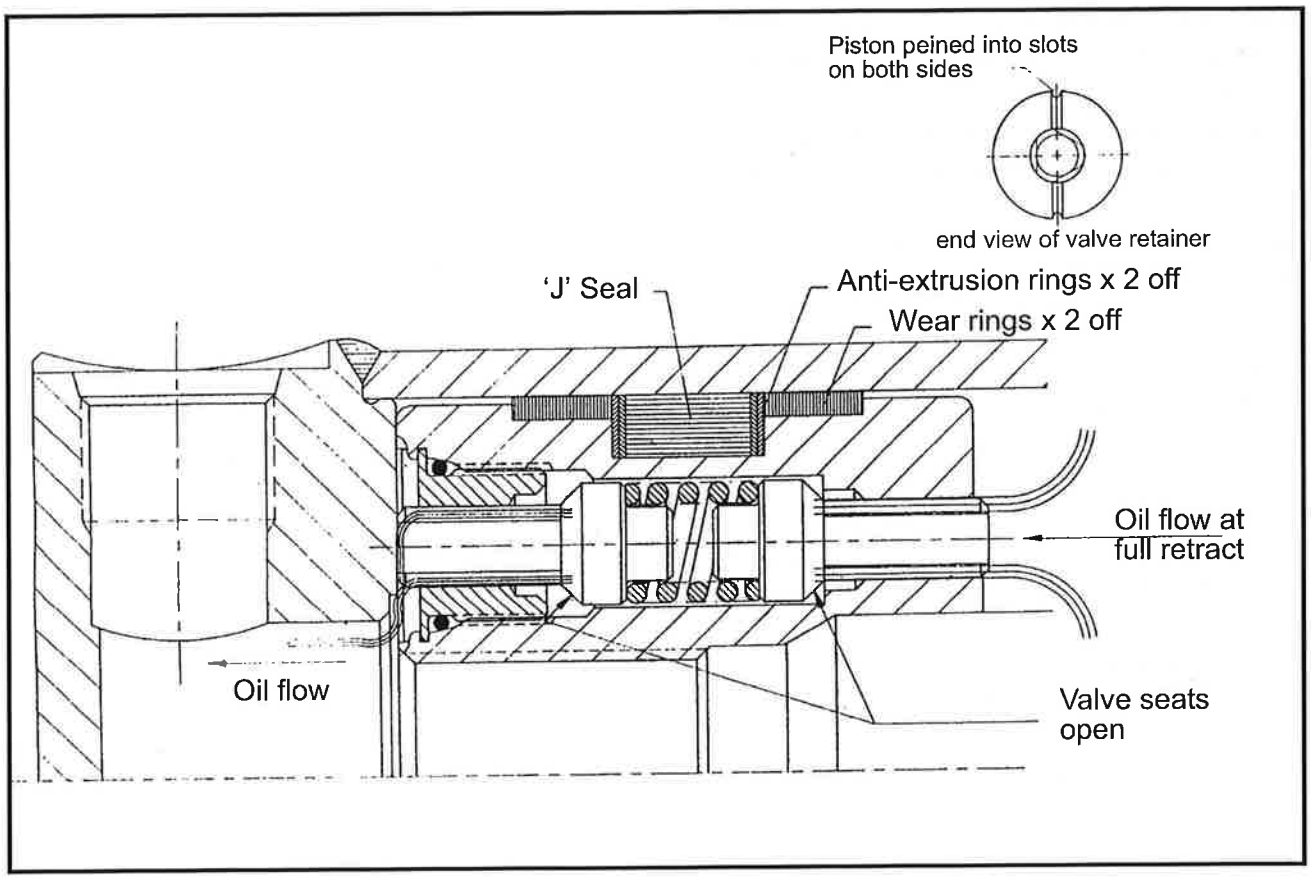
Piston peined into slots
on both sides
end view of valve retainer
'J' Seal
Anti-extrusion rings x 2 off
Wear rings x 2 off
Oil flow at
full retract
Oil flow
Valve seats
open

REPAIR OF THE PHASING CYLINDER

Maintenance: Stage 1

1. Screw a tommy bar into front port and secure firmly.
2. With barrel assembly held firmly and pinned through rear clevis, give the tommy bar a solid hit to loosen the thread.

NOTE: *Thread is R.H. Alternatively use a "C" spanner in the location provided.*

3. Once front cap has been loosened, continue to remove by hand.
4. On removing front cap from barrel assembly, keeping the shaft square, remove front cap assembly from barrel assembly.
5. If required, first remove the phasing valve from the piston using the modified screwdriver tool (1).
6. Case reccommends that fully tested piston assemblies be used in lieu of repairing/ replacing the valve only.
7. Remove the seals from the piston.

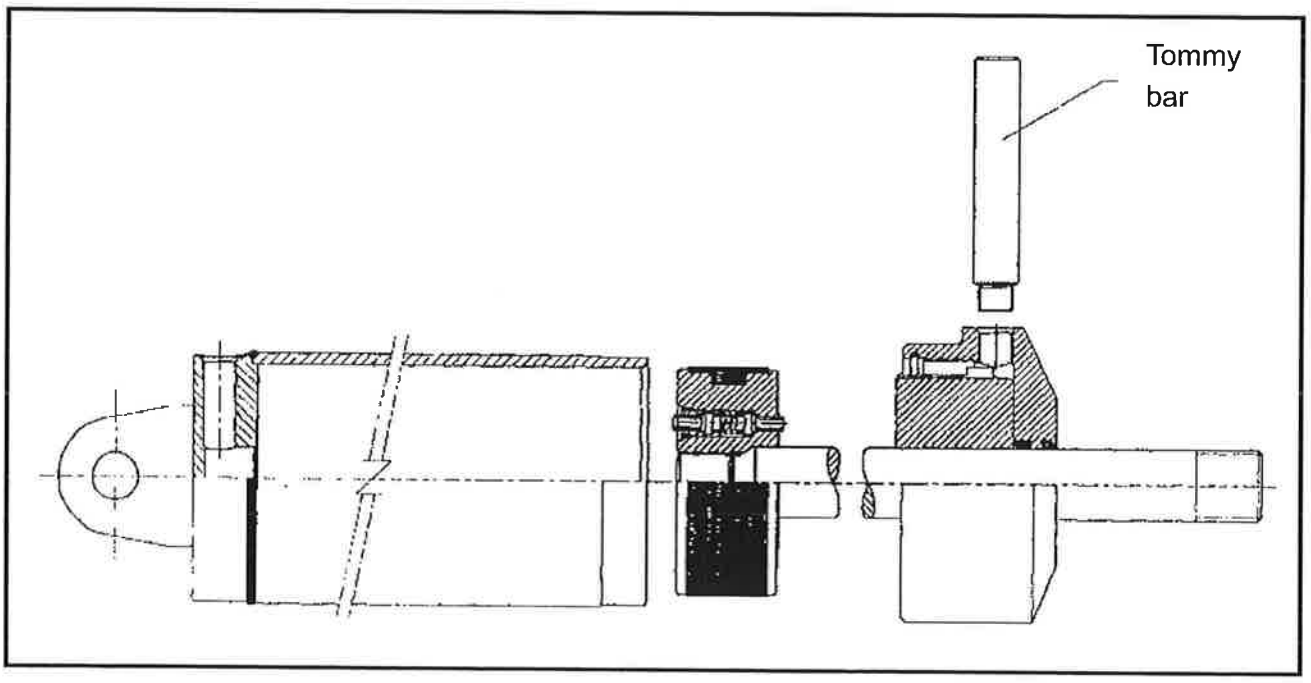

Maintenance: Stage 2

1. Apply heat to the piston / rod assembly to break the Loctite.
2. Using piston spanner (2) remove the piston from the rod.
3. Remove the front cap and bush from the rod by sliding eack component down over the piston thread end. Do not slide the components over the clevis thread end seals will be damaged.

NOTE: *Note rod seal orientation, which is critical because rod seal is single acting only (3).*

4. Seal kit part nº: SKAU080-17.

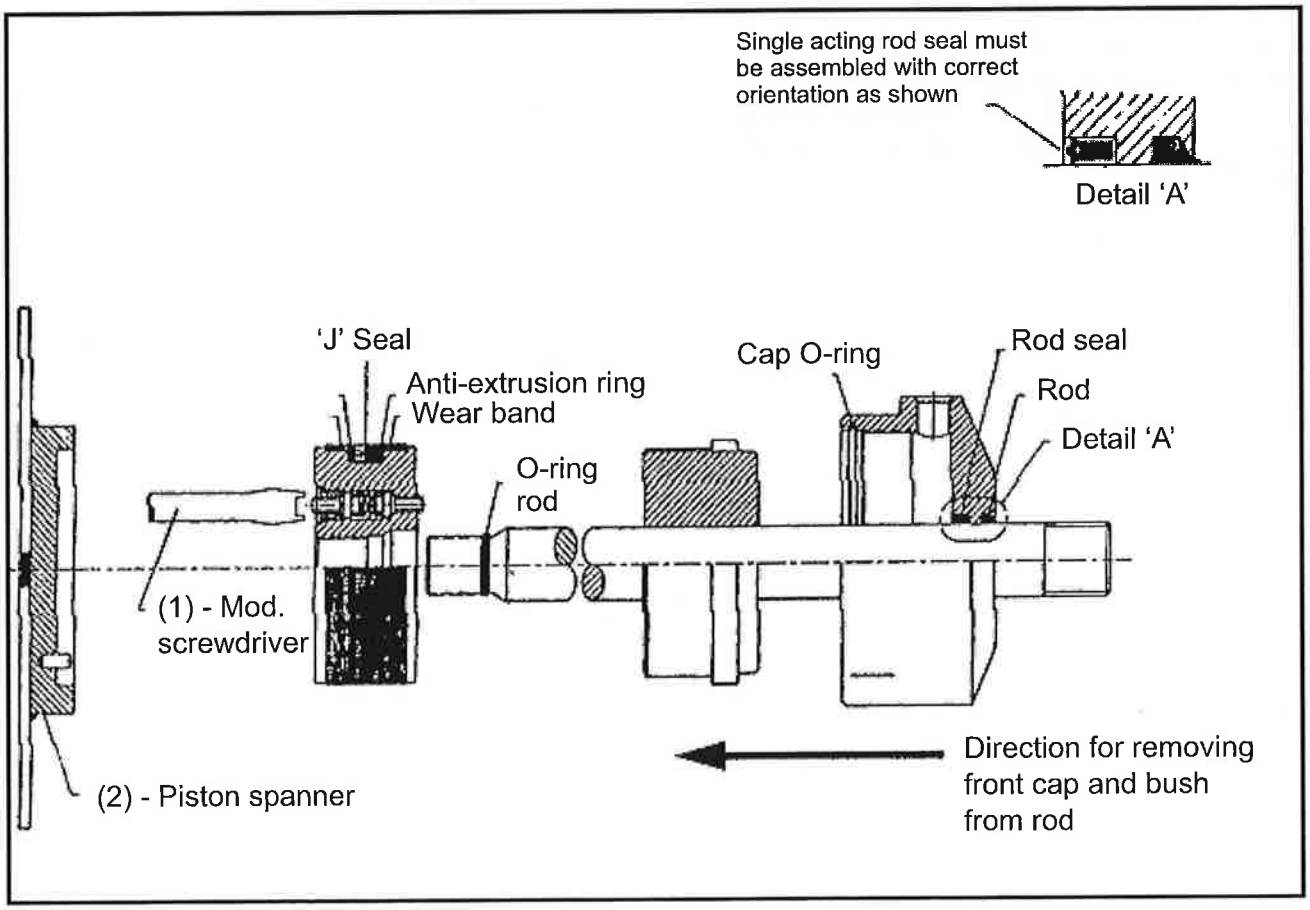

Procedure for bleeding and rephasing of the system

Most damage is likely to occur during initial commissioning after system servicing has taken place (eg. hose or component replacement).

It is therefore imperative that correct bleeding of the system should take place prior to operation of the equipment.

NOTE: *Bleeding of the system should not be confused with the rephasing of the cylinders as these are two separate operations.*

Bleeding the system

1. Cylinders assembled and plumbed into the machine system.
2. Steering is set with the cylinders at mid stroke.
3. With the steering at full lock in one direction, one cylinder will be at full extension with the other at full retraction. At this point, both cylinders will by-pass allowing air in the system to be returned to the tank. This operation is to be repeated to both steering locks until the air is removed.

NOTE: *Bleeding systems in this manner will not guarantee the removal of all the air. If the steering continues to feel spongy and unresponsive, repeat step 3. If unsuccessful, bleed cylinders individually by cracking the port fittings and allowing the trapped air to escape.*

Phasing the system

1. Cylinders assembled and plumbed into the machine system.
2. Steering is set with cylinders at mid stroke.
3. With the steering at full lock in one direction, one cylinder will be at full extension with the other cylinder at full retraction. At this point both phasing valves will be open allowing oil to by-pass. Cylinders will now be phased in one direction. Repeat this operation in the opposite lock. Cylinders will now be phased in both directions.

CYLINDERS

The CASE IH Austoft cylinders are a high quality cylinder which require minimum maintenance.

If maintenance is carried out when needed, the life of the cylinder is extended.

Front Suspension Cylinder

The cylinder consists of a barrel with the end cap containing the cylinder mount welded on.

The rod end cap is fitted into the barrel and contains the bush, rod seal and wiper seal.

The rod end cap to barrel is sealed by an ORing and is held in the barrel by 4 allen headed cap screws. There are no internal or external adjustments.

The piston seals and rod seal are **polypack seals**.

The front suspension cylinder and elevator slew cylinder, have similar construction, and use the same type of seals.

Nevertheless, the rod end cap is retained on tube with four "Allen" screws, and has an internal stop of 100mm.

Overhaul

Remove the unit from the machine and hold in a vice. Remove the rod end cap with a suitable spanner, and withdraw piston rod and piston.

Undo the piston rod nut and remove the piston and rod end cap (On a major overhaul discard all seals).

NOTE: *Where necessary remove roll pins from piston nuts and yokes.*

Inspection

Inspect the cylinder bore and piston rod for scoring and scratching.

Check the neck bush bore dimension against that of the piston rod. Replace if worn.

NOTE: *Excess wear in the bush will cause the shaft to foul on the rod end cap and damage the seal, resulting in a leak.*

Remove any nicks or burrs. Check the threads in porting.

Assembly is the reverse of disassembly.

Ensure the piston nut is tightened securely, ORings and seals are in the correct position, in correct way round and not twisted.

Elevator slew cylinders

The Elevator slew mechanism consists of a frame mounted to the back of the harvester on a pivot pin and is connected via 2 hydraulic cylinders to the chassis. The cylinders are trunion mounted and in operation shift the slew frame through 160° to position the elevator from one side of the machine to the other.

Disassembly

Clean the outside of the cylinder. If the hoses were removed with the cylinder, remove the hoses from the cylinder.

NOTE: *Refer to the attached illustrations.*

1. Fasten the barrel (18) In a vice or other holding equipment. Be carefull to prevent damage to the barrel.
2. Loosen and remove the lock screw (16) from the gland (5) and the barrel (18)
3. Use a gland wrench (Pin wrench) to loosen and remove the gland (5) from the barrel.
4. Pull the piston rod (1) straight out of the barrel (18) to prevent damage to the barrel.
5. Hold the piston rod eye (1) and support the piston rod (1) near the piston (12). Use a shop cloth between the piston rod (6) and the support to prevent damage to the piston rod.
6. Loosen and remove the cap screw (15) and hardened washer (14) that holds the piston (12). Use a torque multiplier for cap screws that have a high torque value.
7. Remove the piston (12) from the piston rod (1)
8. Remove the gland (5) from the piston rod (1).
9. Remove the wear ring (11), seal (10), back up ring (9), and piston ring (13) from the piston (12).
10. Remove the O-Ring (8), backup ring (7), wiper (3), buffer seal (4), and bushing (6) from the gland (5).
11. Remove the end cap (19) from the barrel (18).
12. Remove the backup ring (21) and O-ring (20) from the end cap (19).

Inspection

1. Clean the piston (12), gland (5), piston rod (1), barrel (18), hardened washer (14) and cap screw (15) in cleaning solvent. Make sure the orifice in the piston (12) is open.
2. Discard the parts that were removed from the piston (12), gland (5), and end cap (19).
3. Illuminate the inside of the barrel (18). Inspect the barrel for deep groves and other damage. If there is damage to the barrel, a new barrel must be used.
4. Check to be sure the piston rod (1) is straight. If the piston rod is not straight, install a new piston rod.
5. Remove small scratches on the piston rod, or in the barrel with emery cloth of medium grit. Use the emery cloth with a rotary motion.
6. Inspect the bushing (17) and the snap rings (22) in the piston rod eye (1) and bushings (17) on the trunnions of the barrel (18), replace as required.
7. Inspect the gland (5) for rust and clean and remove rust as required.
8.

Assembly

NOTE: *If a new gland (5) is being installed, put the part number of the cylinder on the new gland.*

1. Install the bushing (6) in the gland (5).
2. Install the buffer seal (8) in the gland (5). The side of the buffer seal (8) with the lip must be towards the small end of the gland. (5).
3. Install the wide seal (6) in the gland (5). The wide seal is to be installed so that the lips of the wide seal are towards the small end of the gland (5).The wide seal can be difficullt to install. Use tool shown on page 39.
4. Install a new wiper (3) in the gland (5). The lips of the wiper (3) must be towards the large end of the gland (5).
5. Install a new backup ring (7) in the groove on the outside of the gland (5). If both sides of the backup ring are not flat, the side that is not flat must be towards the small end of the gland (5).
6. Install the O-ring (8) next to the backup ring (7), as shown on page 39.
7. Fasten the piston rod eye (1) in the vice.
8. Remove any marks and sharp edges on the chamfer at the end of the piston rod (1).
9. Lubricate the bore of the gland (5) with clean oil.
10. Push the gland (5) onto the piston rod (1). If necessary use a soft hammer to drive the gland (5) onto the piston rod (1).
11. Put a support below and near the end of the piston rod (1). Use a shop cloth between the support and the piston rod to prevent damage to the system.
12. Put the piston (12) on the end of the piston rod.
13. Put the hardened washer on the cap screw.
14. Clean the threads on the end of the piston rod and the threads of the cap screw using Loctite cleaning solvent. Allow to dry. Apply Loctite 242 to the piston rod threads 6.4 mm from the open end of the piston rod, so that there is 12.7 mm of Loctite 242 on the piston rod threads. DO NOT apply Loctite to the first 6.4 mm of the piston rod threads.
15. Install the cap screw (15). Tighten the cap screw to 500 - 600 Nm. (660 - 820 Ft Lbs). A torque multiplier can be used to help tighten the cap screw.
16. Install a new piston ring (13) in the groove at the cap screw end of the piston (12).
17. Install a new wear ring (11) in the center groove on the outside of the piston (12).
18. Install a new backup ring (9) in the groove on the outside of the piston (12).
19. Install a new seal (10) on top of the backup ring (9).
20. Fasten the barrel (18) in a vice or other holding equipment. Be careful to prevent damage to the barrel.
21. Install a new backup ring (21) and O-ring (20) in the groove on the outside of the endcap (19).
22. Lubricate the O-ring (20) on the end cap (19) with clean oil.
23. Install the end cap (19) in the barrel (18).
24. Lubricate the inside of the barrel (18) and the piston (12) with clean oil.
25. Use a piston ring compresson tool to hold the new wear ring in place.
26. Push the barrel (18) straight onto the piston (12).

27. Start the barrel (18) onto the piston rod assembly. Push the barrel onto the piston rod assembly until the compression tool is pushed off the piston rod assembly. Be carefull not to damage the wear ring and seal.
28. Lubricate the O-ring (8) on the gland (5) with clean oil.
29. Tighten the gland (5) to 135 to 542 Nm. (100 - 400 Ft Lbs). If the lock screw (16) holes become aligned in this torque range, install the lock screw. Tighten lock screw to 2.3 Nm. (20 In Lbs). If the lock screw holes are not aligned, carry out steps 30 through 32.
30. Tighten the gland (5) to 135 to 542 Nm. (100 - 400 Ft Lbs).
31. Use a No. 26 drill and drill a hole half in the gland (5) and half in the barrel (18). Drill to a depth of 11 mm. Do not drill in line with a hole in the gland (5) for the gland wrench.
32. Install the lock screw (16). Tighten the lock screw (16) to 2.3 Nm. (20 In Lbs).
33. If the hoses were removed with the cylinder, install new O-rings, if equipped on the hose fittings. Lubricate the O-rings with clean oil.
34. Install the hoses.

Elevator slew cylinder

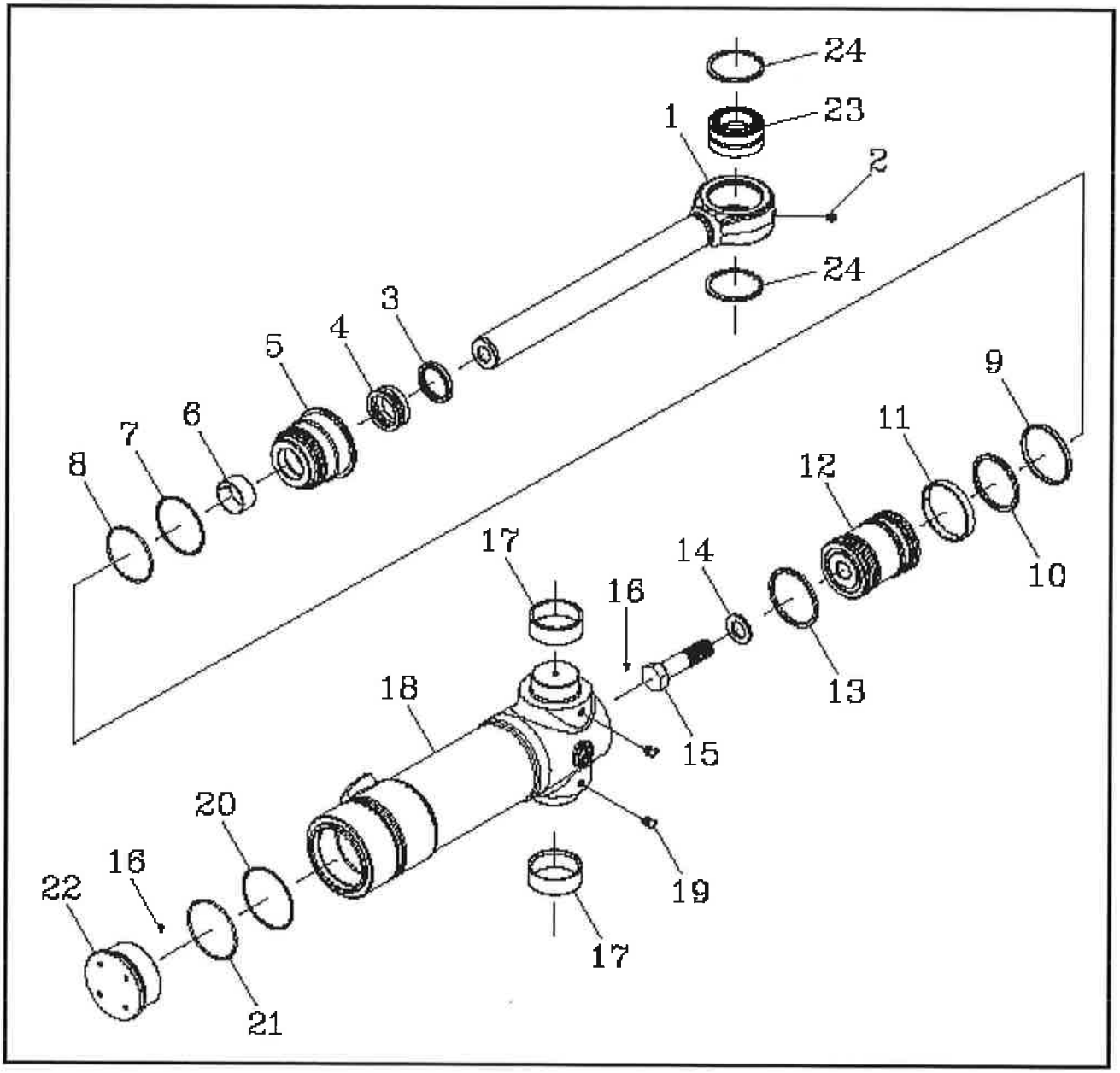

CROP DIVIDER LIFT CYLINDER WITH COUNTERBALANCE SPRINGS

Disassembly

1. Undo the locknut (1) and remove the cylinder bolt (8) remove the compensator tongue (2).
2. Extend the cylinder fully and remove nut (3) and washer. The spring tube (4) and spring (5) can now be removed.
3. The gland nut/housing (6) can now be removed from the cylinder body (7).
4. The piston is a two part type with a luprene type seal. It is sealed to the shaft by an O-Ring.

To remove the piston seal and wear rings, undo the retaining nut, the piston will come apart revealing an O-Ring on the shaft.

The seal and wear rings can be withdrawn from the piston when it is separated.

Inspection

The inspection is the same as the poly pack seal cylinder.

Assembly

Assembly is the reverse of disassembly. Replace seals and wear rings where necessary.

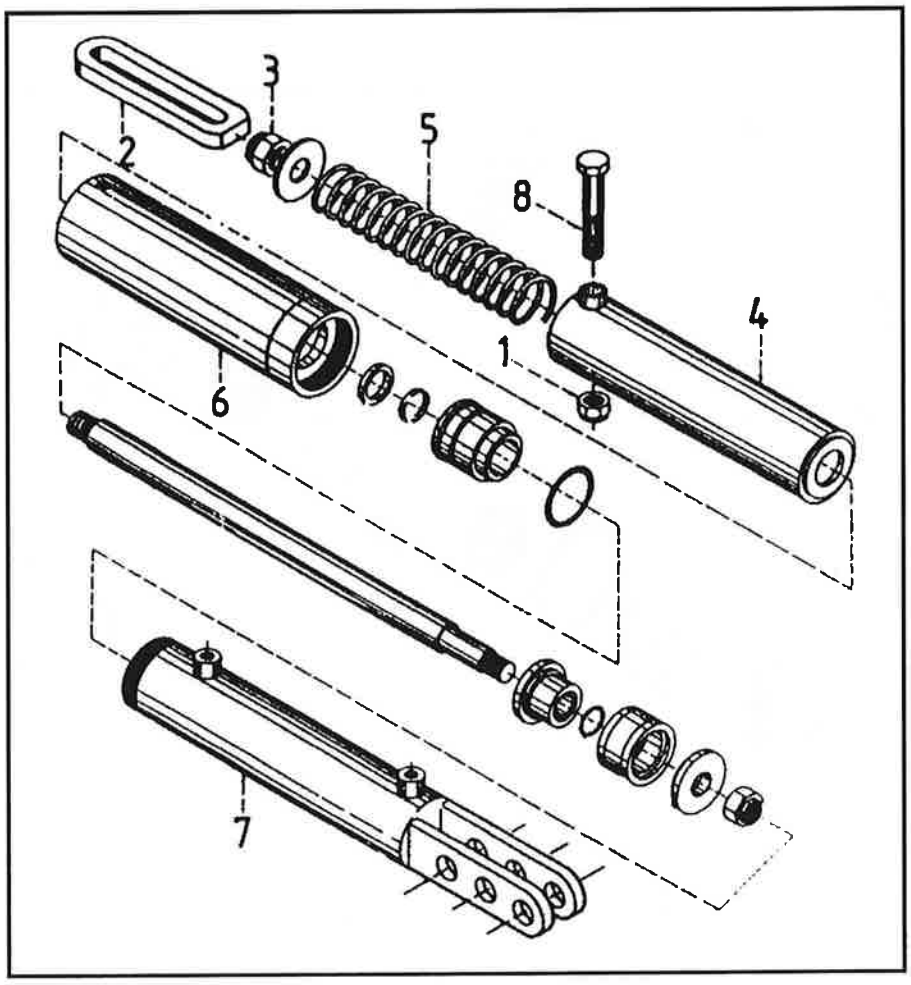

BIN DEFLECTOR CYLINDER

Disassembly

Undo the cylinder nut and remove the rod assembly from the barrel.

Remove the nut holding the piston to the rod.

Examine all seals and surfaces. Replace where necessary.

Assembly

Assembly is the reverse of the above procedure.

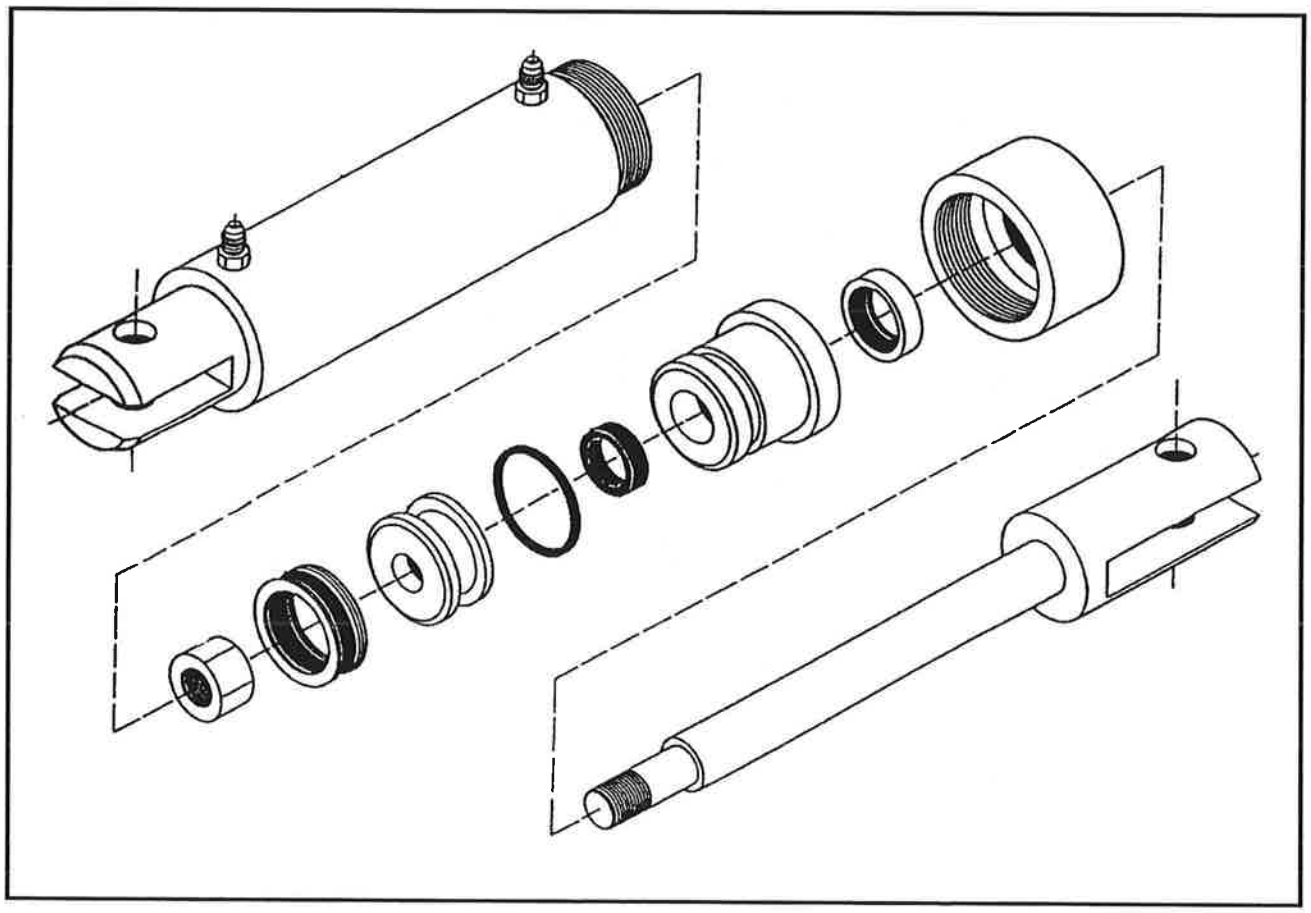

Front Suspension Cylinder End Cap

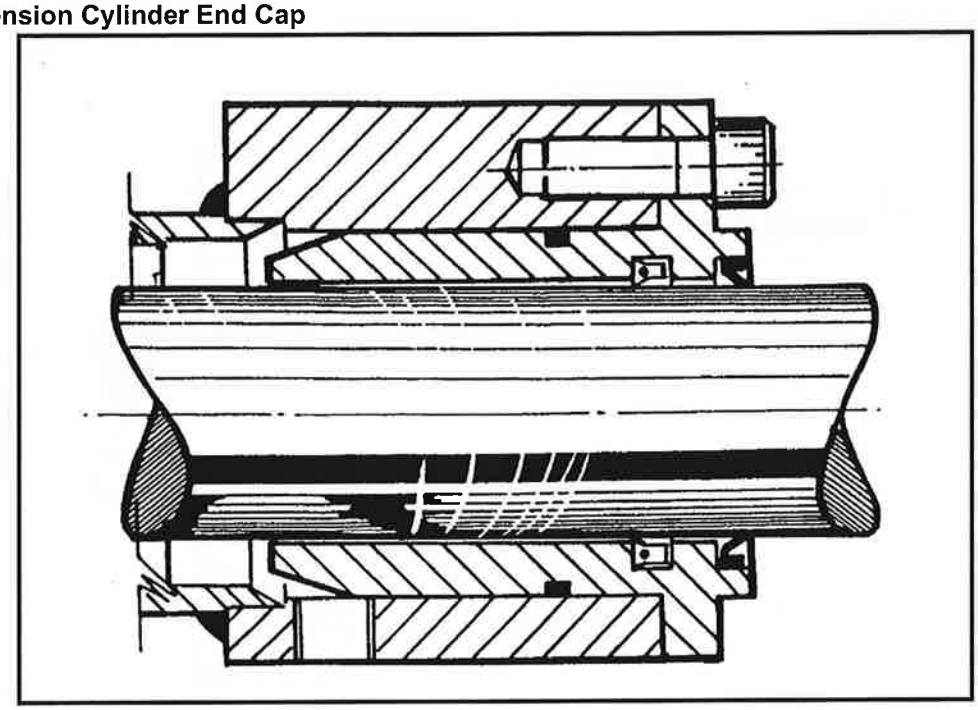

Poly Pack Seals

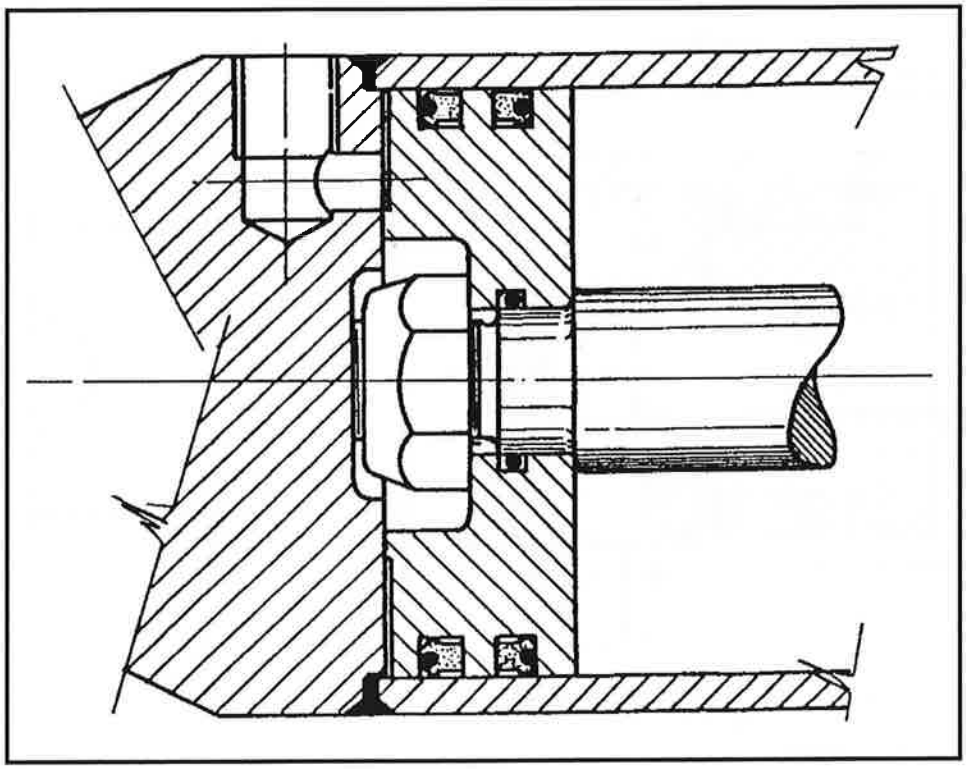

Poly Pack Road Seals

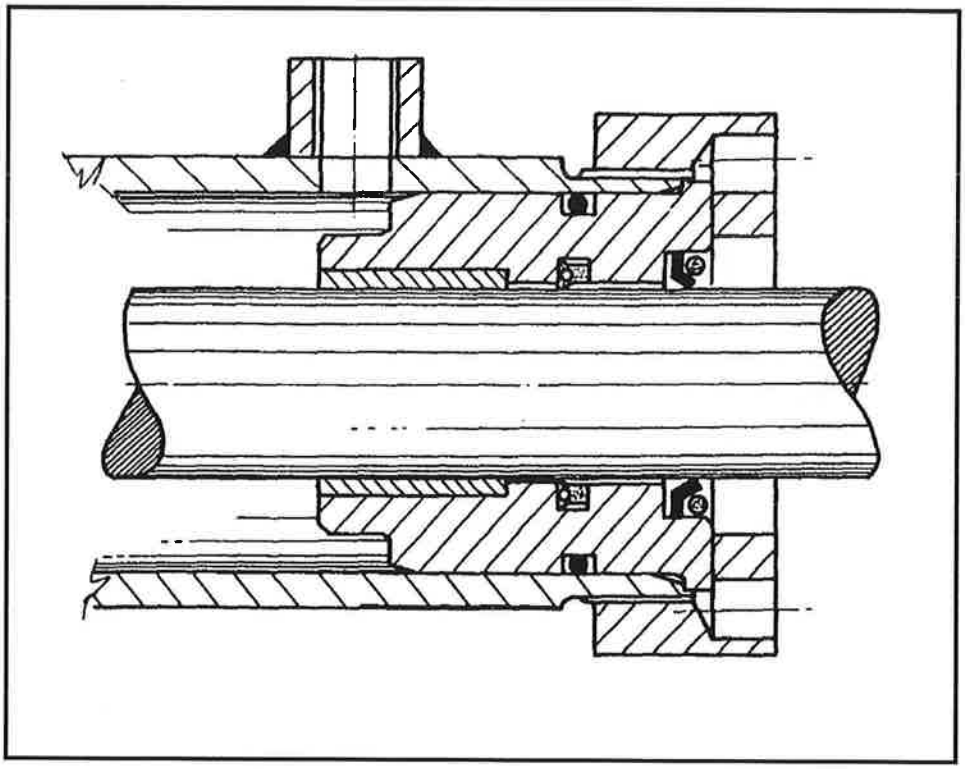

Luprene Type Seal

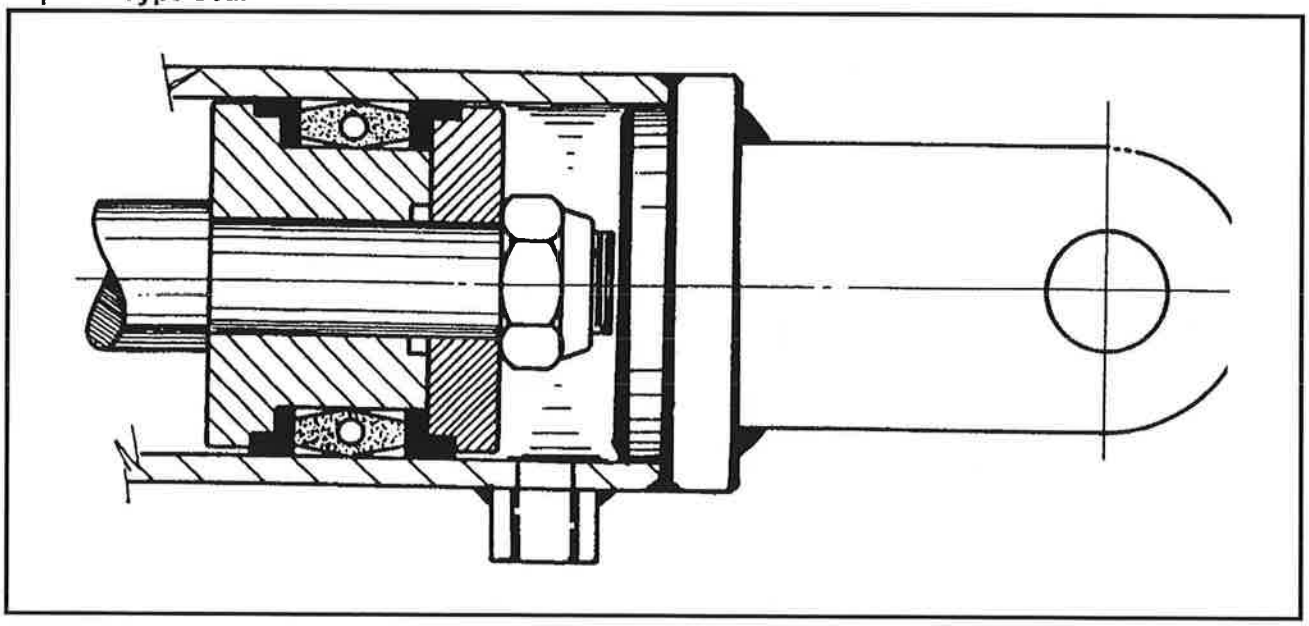

CHAR-LYNN MOTOR & STEERING CONTROL

The harvester uses Char-Lynn hydraulic motors to drive various "Direct Couple" functions on the harvester. There are 4 types used. They are: 'S' series, 2000 and 10,000 series.

The principle of operation is the same for the three types. They all have an orbital geroler which rotates within the ring gear by means of oil forcing apart the "teeth" of the inner and outer gears.

The 'S' series uses a rotary spool valve and has no bearings to carry the load. The 2000 serie uses a flat disc type valve and has preloaded tapered roller bearings to carry the load being driven by the Char-Lynn. The 10,000 series uses the flat disc type valve and has roller bearings with a thrust bearing to carry the load being driven.

To change the seal in the "S" series Char-Lynn

First, remove the Char-Lynn from the harvester, and mount shaft end up in a vice.

NOTE: *Use soft jaws.*

Remove the woodruff key from the drive shaft. Then, undo the four screws holding the end plate to the body of the Char-Lynn.

The screws have 8mm or 5/16", 12 sided heads which are recessed into the end plate. Take care when removing them, that they are not damaged whilst removing them.

NOTE: *Heat may be needed to be applied to the body of the Char-Lynn as Loctite is used on these screws.*

Remove the end plate, and then remove the dust seal and the high pressure seal from the end plate. Inspect the end plate thoroughly for cracks or damage in the high pressure seal area.

Remove the sharp corner of the flange seal seat as shown. Then fit the high pressure seal and dust seal using a suitable mandrel.

Mount the end plate to the body of the Char-Lynn after replacing the sealing "O" ring. Apply Loctite (sparingly) to the screws, and tighten to 225 - 250 inch pounds torque.

Fit the woodruff key to the shaft and replace the Char-Lynn on the harvester.

To dismantle the Char-Lynn completely, remove the four screws on the end plate and the seven screws on the geroler head. The unit can then be dismantled.

When assembling the unit, ensure all parts are clean and free from damage. Replace all seals and "O" rings.

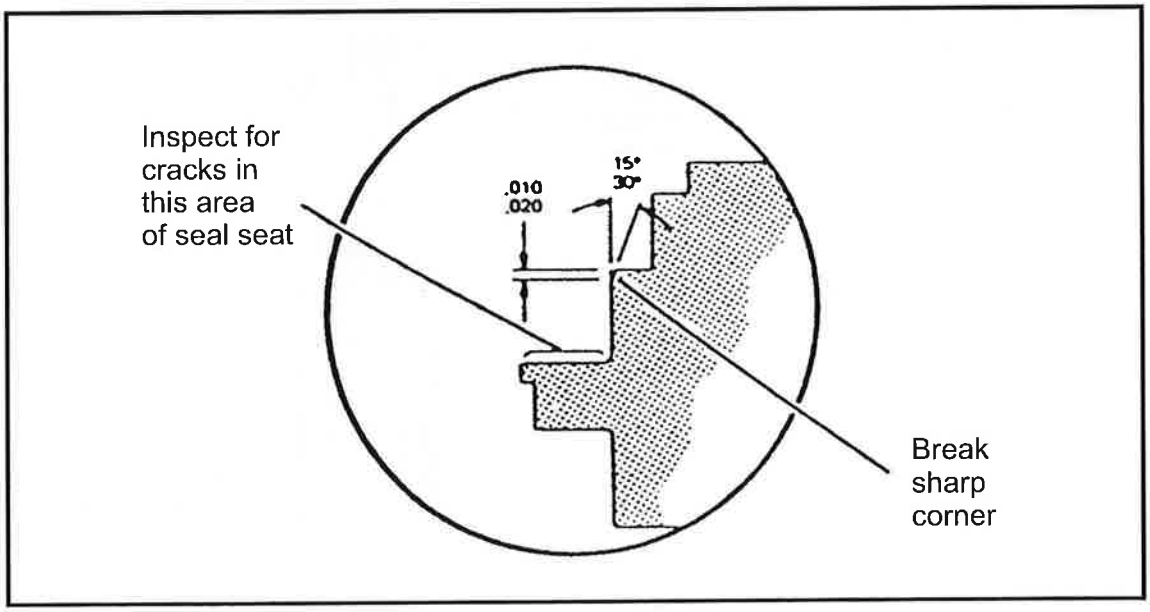

Timing Alignment

To time the motor, align all timing dots Figure 1 and replace the bump on the geroter ring as shown in Figure 2.

This will time the Char-Lynn for standard rotation. To reverse the rotation, align the componetns as in Figure 3.

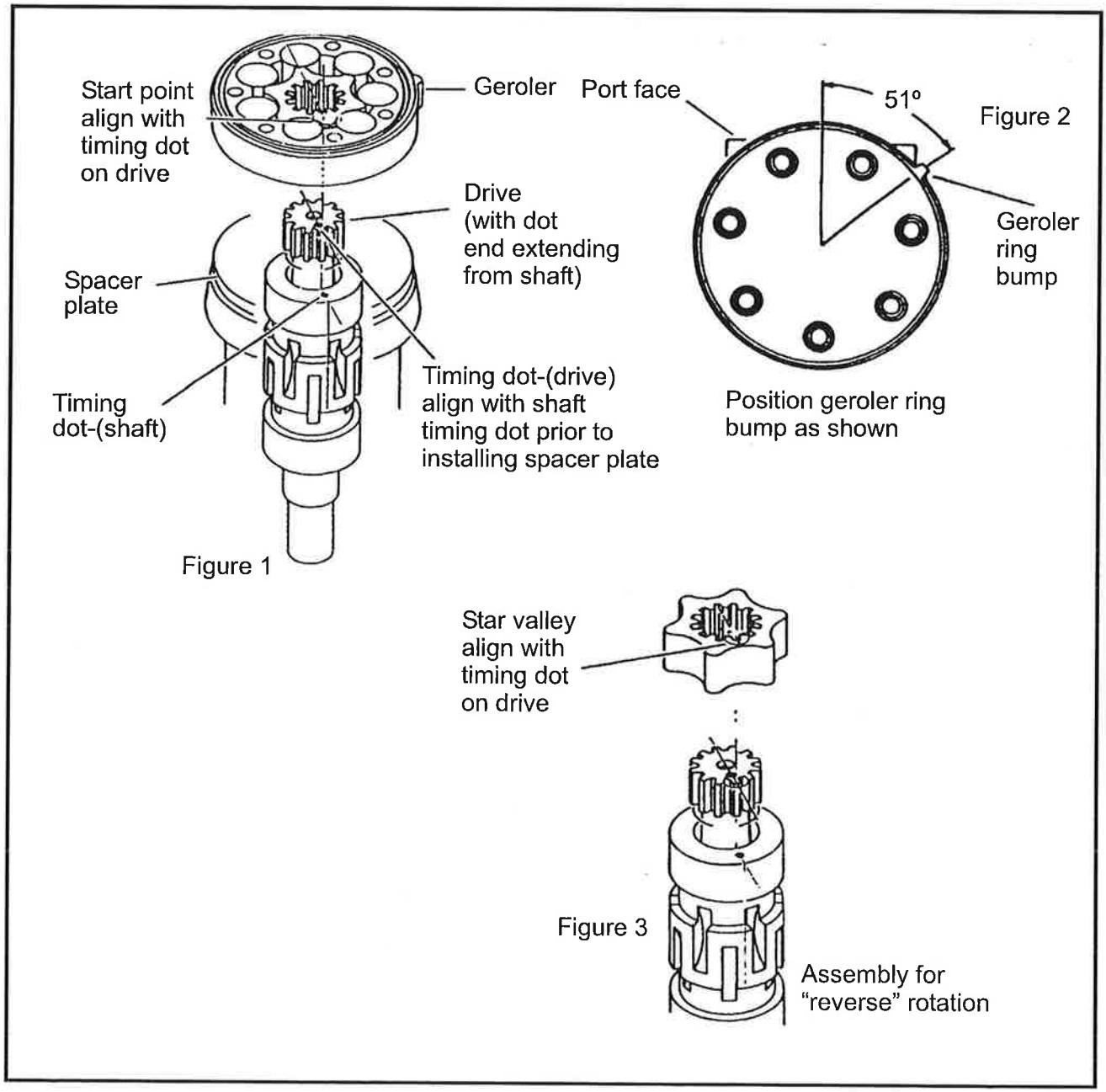

To change the shaft seal in the 2000 series motor, remove the four bolts and dismantle the motor completely.

Replace the seals and assemble the motor replacing all face seals and "O" rings.

To time the motor, the geroler, valve drive, valve plate and valve have to be aligned.

Locate the largest open pocket in the geroler, and mark it on the outside edge of the geroler.

Install the valve drive in the geroler. Align the notch on the valve plate with the notch in the geroler Fig 4.

Locate the slot opening in the valve plate which is in line with the largest open pocket of the geroler.

Locate any port open to the outside of the valve, and align this opening with the open slot of the valve plate that is in line with the largest open pocket of the geroler.

Install the valve by rotating it clockwise until the spline teeth engage (1/2 spline tooth).

NOTE: *The 10,000 series does not conform to the normal conception of flow from the hoses the Char-Lynn to obtain direction.*

The 10,000 serie motor has a seal retainer held into the body by bolts (tension 192 inch pounds for the 10,000 series).

This can be removed without dismantling the complete motor to change the shaft seals.

For further information regarding repairs to these units, refer to the Eaton Repair Information Manual for the particular model.

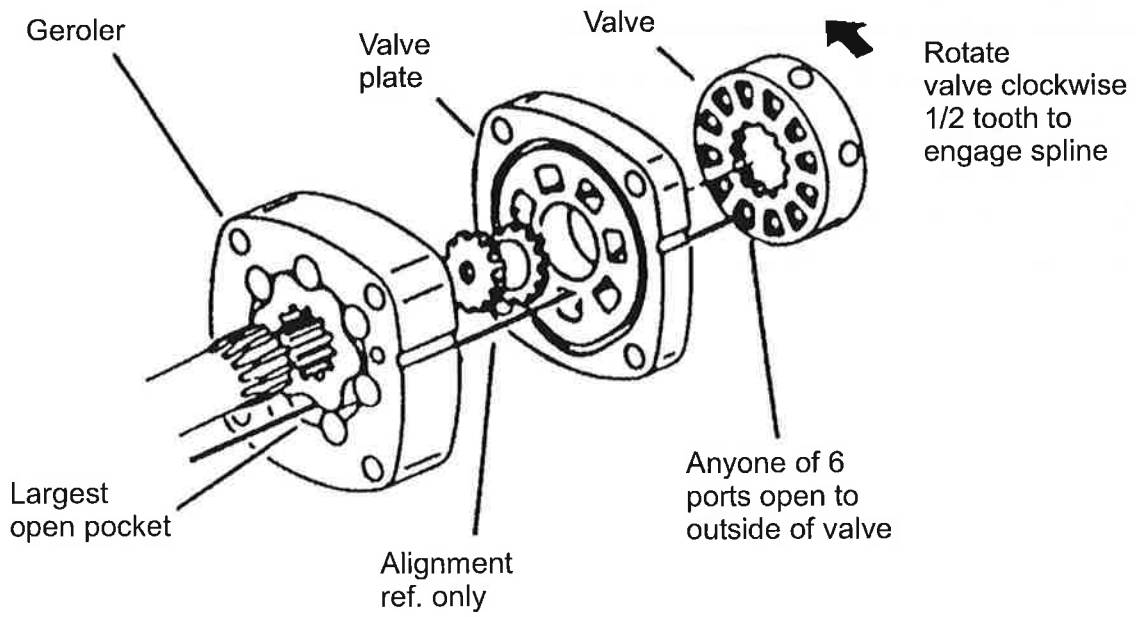

Figure 4

Dimensões do Char-lynn

The old method of designating Char-Lynn sizes was by a letter with an additional 'S', if the motor was a geroler type, e.g. 'PS'. This has been superceded, but is still in common use. Set out below is an equivalent chart for both gerotor and geroler motors.

A **1/4"**	**E** **7/8"**	**M** **1.1/2"**
B **3/8"**	**G** **1"**	**P** **2"**
C **1/2"**	**K** **1.1/4"**	

The new system of numbering is as follows:

Geroler motors: Previously type S; are now: 103 xxxx 010.

The four centr numbers denote the size:

1009 = 1/4"	1010 = 3/8"	1011 = 1/2"	1012 = 7/8"
1013 = 1"	1014 = 1 1/4"	1015 = 1 1/2"	1016 = 2"

A 'PS' motor is therefore now called a 103 1016 010.

103-1016-010 Standard.

103-2016-010 Case drain.

Numbers 1009 through 1016 -- Standard models.

Numbers 2009 through 2016 -- Motor with case drain port.

2000 Series Char-Lynn Motors

The 2000 series motors are numbered in relation to their cubic inch displacement, and can be identified by ring widths.

Displacement

CU. IN.^{3}	WIDTH	MODEL N°
4,9	0,701"	104-3934-006
6,2	0,884"	104-1030-006
9,6	1,137"	104-3281-006
11,9	1,402"	104-1033-006
14,9	1,758"	104-1034-006
18,7	2,206"	104-3279-006
24,0	2,833"	104-1299-006
30,0	3,516"	104-3935-006

6000 Series Char-Lynn Motors

The 6000 series motors are numbered in relation to their cubic inch displacement, and can be identified by ring widths.

Displacement

CU. IN.^{3}	WIDTH	MODEL N°
11,9	0,850"	112-1058-005
15,0	1,070"	112-1059-005
19,0	1,360"	112-1060-005
23,9	1,710"	112-1061-005
29,9	2,140"	112-1062-005
38,0	2,720"	112-1109-005
59,9	4,290"	112-1063-005

10,000 Series Char-lynn Motors

The 10,000 series motors are numbered in relation to their cubic inch displacement. They can be identified by ring widths but not between 29.22 Cu. Inc. and 40.55 Cu. In. which are identical and can only be determined by geroler diameter. The internal dimensions of the geroler (diameter) determines the capacity of the unit.

Displacement

CU. IN.^{3}	WIDTH	MODEL N°
20,65	1,250"	119-1032-003
29,22	1,750"	119-1033-003
40,55	1,750"	119-1103-003
57,36	2,500"	119-1035-003

TRACK ADJUSTER RELIEF VALVE

The A8800 harvester has hydraulic cylinder cushioning on the track chains.

This is effected by oil pressure operating on a piston which acts against grease in the other end of the cylinder to adjust the track.

As an obstacle is encountered, which requires give in the track chain, the pressure in the oil end of the cylinder increases until the preset relief valve opens and the oil returns to the tank.

As the load is taken away, the cylinder will return to its original position (maintain correct track adjustment) as oil from the service circuit opens the check valve and enters the cylinder.

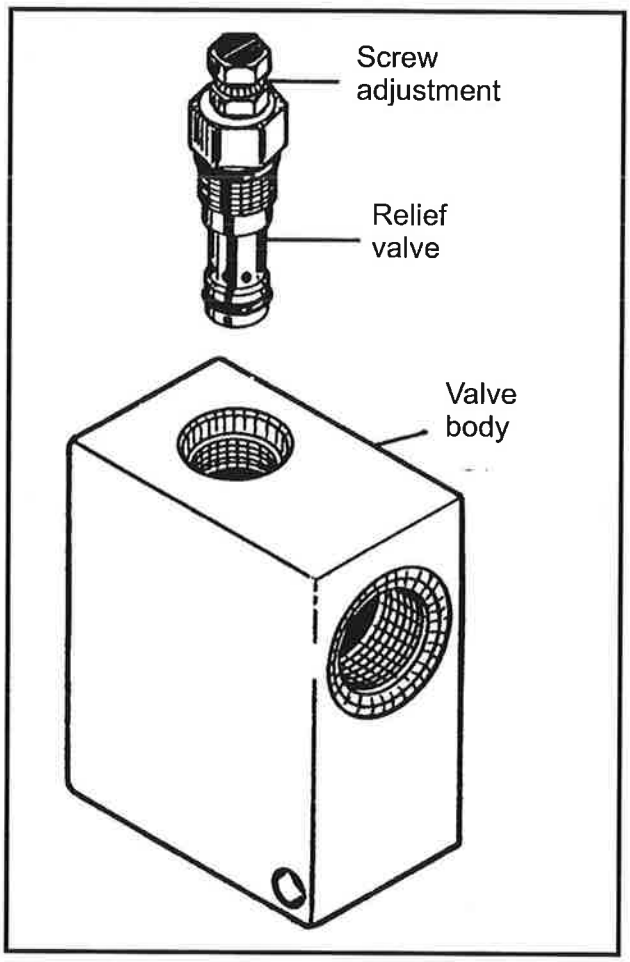

ACCUMULATOR

The accumulator is a bladder type with a set psi pre-charge of nitrogen, which is connected to the basecutter lift and topper cylinders of the harvester to act as a shock absorber in the circuit.

Basecutter A8800 (wide front): 1700 psi

Basecutter A8800 (narrow front): 850 psi

Topper A8000: 1200 psi

Suspesion (opc) A8000: 1200 psi

Pre-charging accumulator

The pre-charge of accumulators with nitrogen gas from a cylinder, requires a set procedure and care by the fitter to ensure that the bladder is not damaged. We find that even experienced hydraulic fitters can occasionally destroy a bladder by introducing the gas too quickly.

When fitting a new accumulator, the procedure we prefer is as follows:

A small quantity of oil from the system (approximately 10% of accumulator capacity) should be entered into the accumulator fluid port and the accumulator rotated to ensure that both the bladder and the shell have a film of oil over their surface.

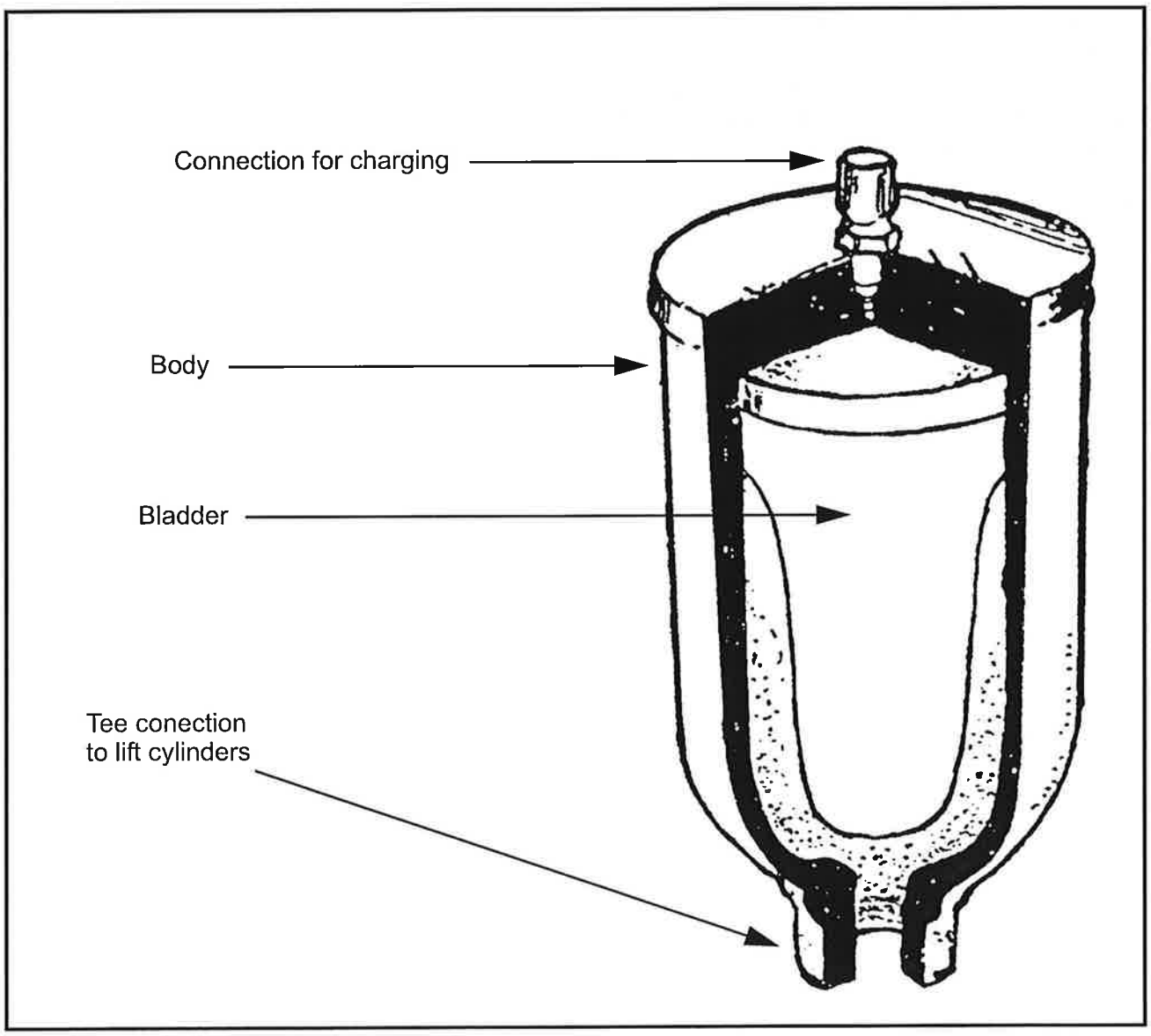

The Christie charging kit can now be used to pre-charge the accumulator, however we recommend that in addition a regulator be fitted at the nitrogen cylinder prior to the hose connection.

The nitrogen regulator should be completely backed off prior to opening the gas cylinder valve. With the gas cylinder valve open, adjust the regulator until gas just flows.

This setting should be maintained until the poppet valve at the fluid port is fully depressed. With the closure of the poppet valve, it is then possible to enter gas at a higher rate.

Flow gas to a pressure slightly above the desired gas pre-charged pressure, then allow time for the temperature to normalise.

Check the pressure and adjust as necessary to exact requirement, then remove the charging kit and check the core for leaks. If no leaks, fit the sealing cap and protective cover.

The lubricating oil is intended to ensure that the bladder extends evenly and will slide when the bladder and the shell make contact.

If lubricating oil is not introduced prior to pre-charging, and if the gas is not initially introduced slowly through the gas regulator, then there is a strong possibility that the bladder will be damaged during the first few moments of pre-charging.

Under these conditions, the bladder slams against the shell wall and holds there while just the end expands and moves forward very rapidly.

Since only a minor part of the bladder is expanding, the wall thickness is greatly reduced and this combined with the rapid forward motion, can cause the bladder to be damaged before the poppet valve closes.

It is our experience that correct pre-charging procedure is necessary to obtain the long and trouble free life normally associated with Fawcett-Christie bladder type accumulators.

COUNTER VALVE BALANCE (A8800) - OPTIONAL

The A8800 basecutter lift cylinder circuit has a counter balance valve added for working in arduous conditions.

This consists of a HC-E4059 valve connected into the circuit. This connects the lift cylinders to the Vickers control via a series of check valves and a relief valve set at 1000 psi.

This allows a free flow of oil to the cylinders when raising the cylinders. When uneven ground is encountered, the check valves divert the oil over the relief valve as it is passing from one cylinder to the other.

This prevents the front of the machine from dropping (nosediving) in certain conditions, by restricting the passage between the two cylinders with the relief valve.

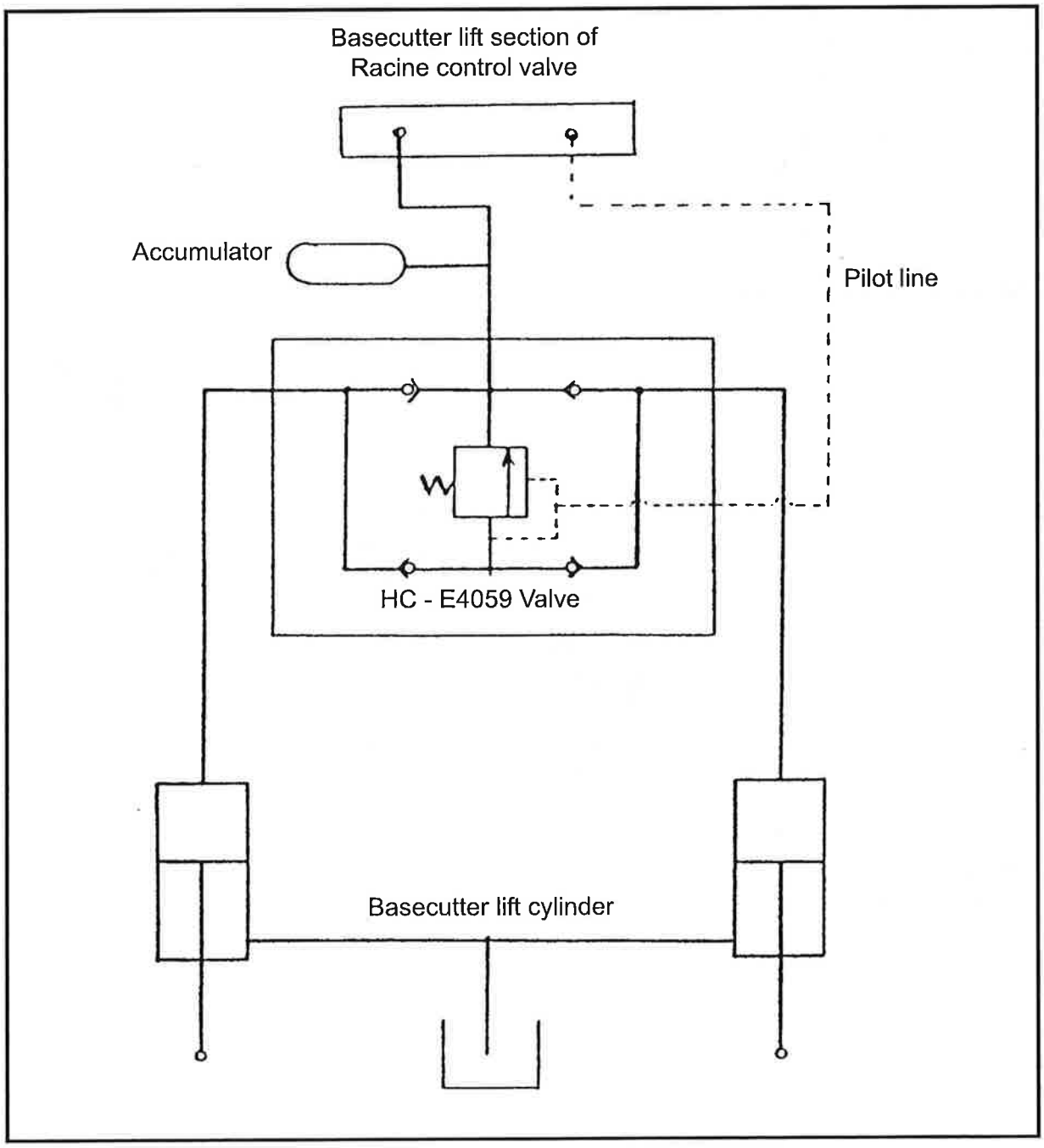

POSITIVE DRIVE VALVES (A8000)

The positive drive is actuated by two electric solenoid valves, which are situated in the forward and reverse equalizer lines.

One solenoid valve is situated in the equalizer line connecting the two forward loop lines of the transmission while the second electric solenoid valve is situated in the equalizer line connecting the two reverse loop lines of the transmission.

In the normal position, the valves are not energised and oil can pass through the valve unimpeded.

When the positive drive is engaged the solenoids close the valves and the flow through the valve is checked in both directions. This prevents oil flow between the right hand and left hand circuits and ensures positive drive. The solenoids are 24 volts.

Operating Range: 21,6 volts - 26,4 volts

Resistance: 27,5 OHM +/- 7% - 20° C

Current Draw: 0,875 Amp. Cold. 0,67 Amp. warm.

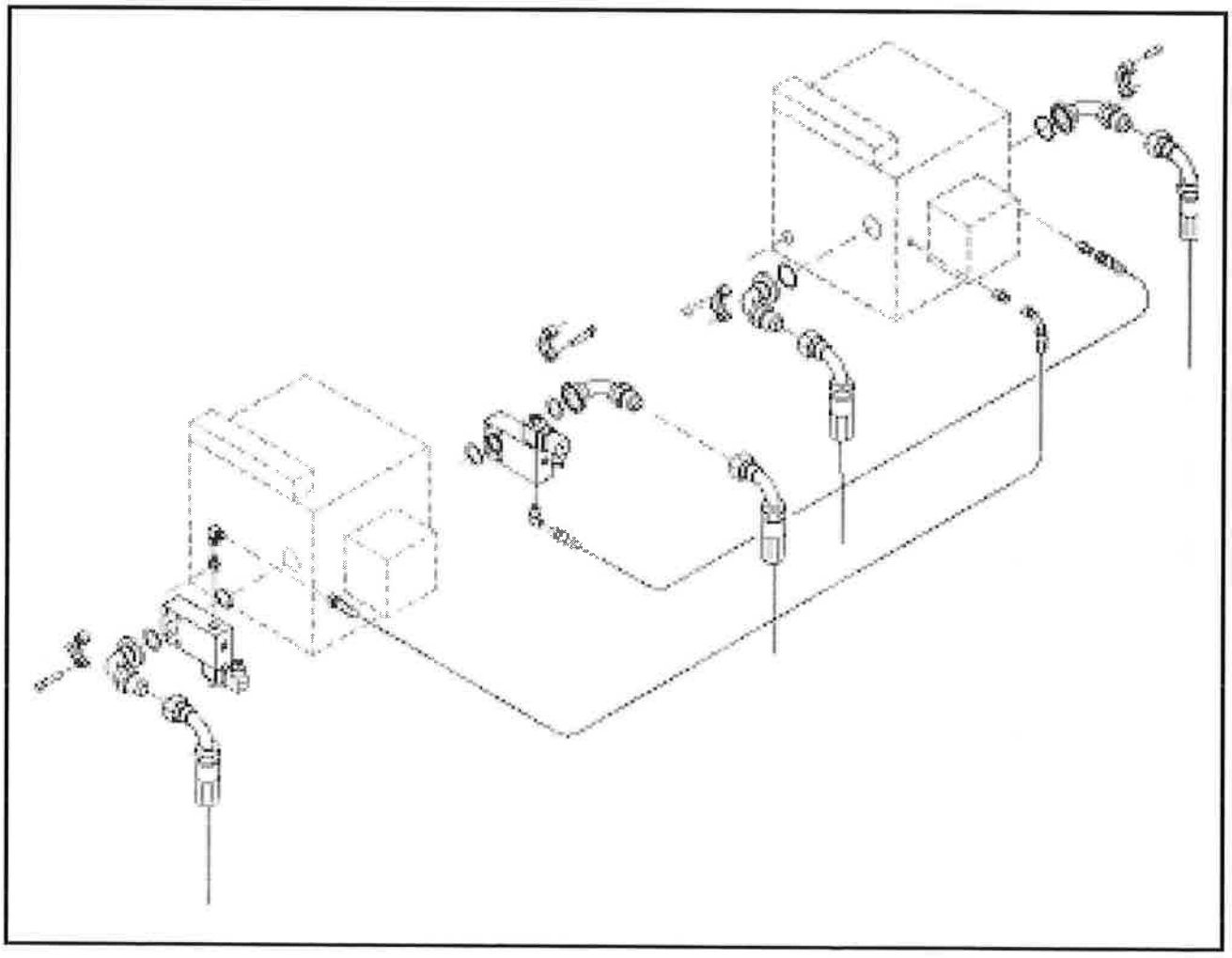

TOPPER MANIFOLD

The topper manifold is mounted on the topper frame. When the manifold is mounted on a shredder topper a flow divider is fitted in the valve and the gathering discs are connected in parallel.

With a standard topper fitted, the flowdivider is removed and replaced with a plug and the gathering discs are connected in series.

Overhaul

1. Remove the manifold from the topper.
2. Remove all components from the manifold.
3. Check all seals and 'O' rings for damage and replace where required.
4. Reassemble and refit the manifold.

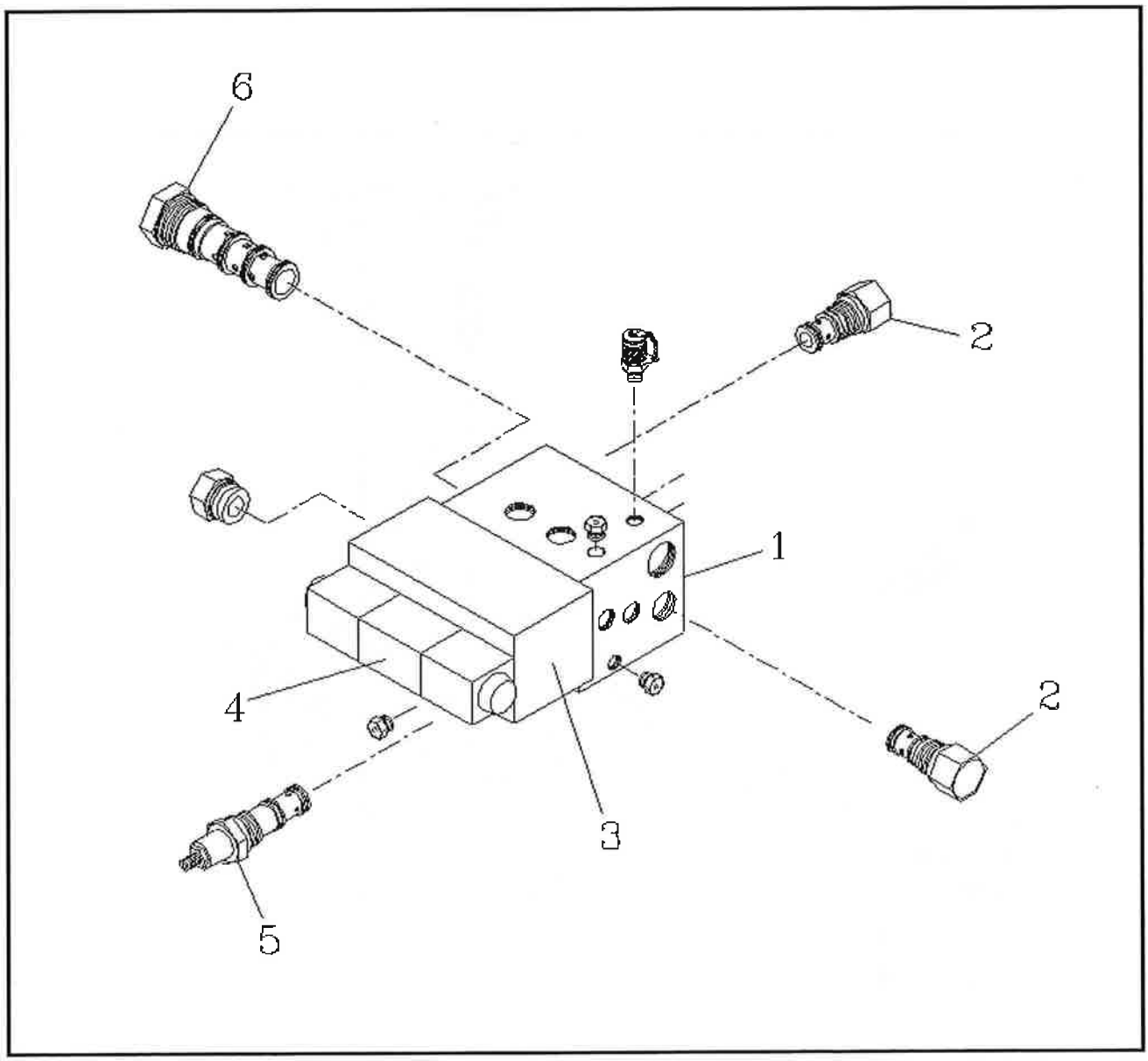

ELEVATOR MANIFOLD

The elevator manifold is mounted on the top of the elevator. The mavifold directs oil flow to the elevator chain drive, secondary extractor and service functions.

Overhaul

1. Remove the manifold from the elevator.
2. Remove all components from the manifold.
3. Check all seals and 'O' rings for damage and replace where required.
4. Reassemble and refit the manifold.

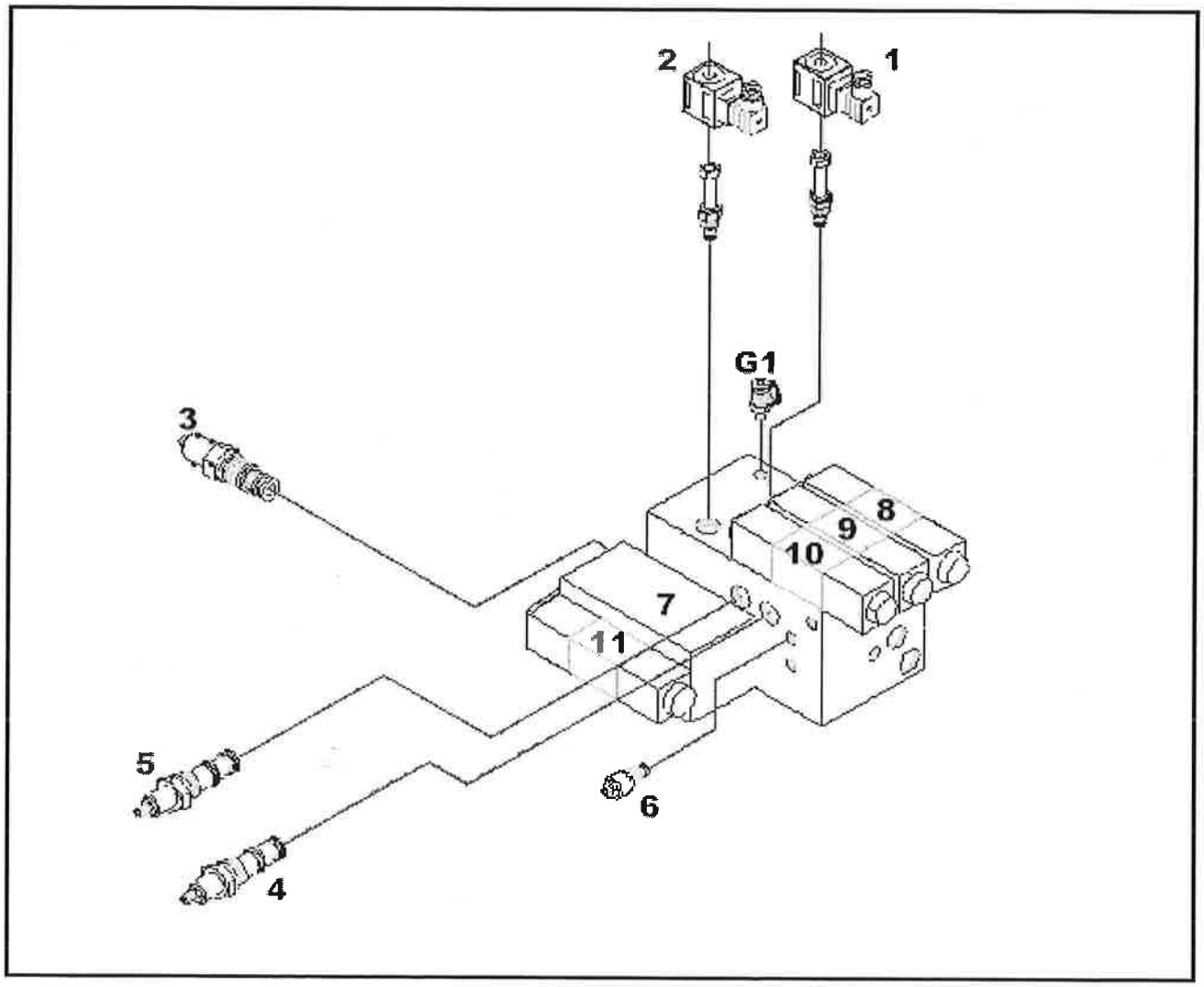

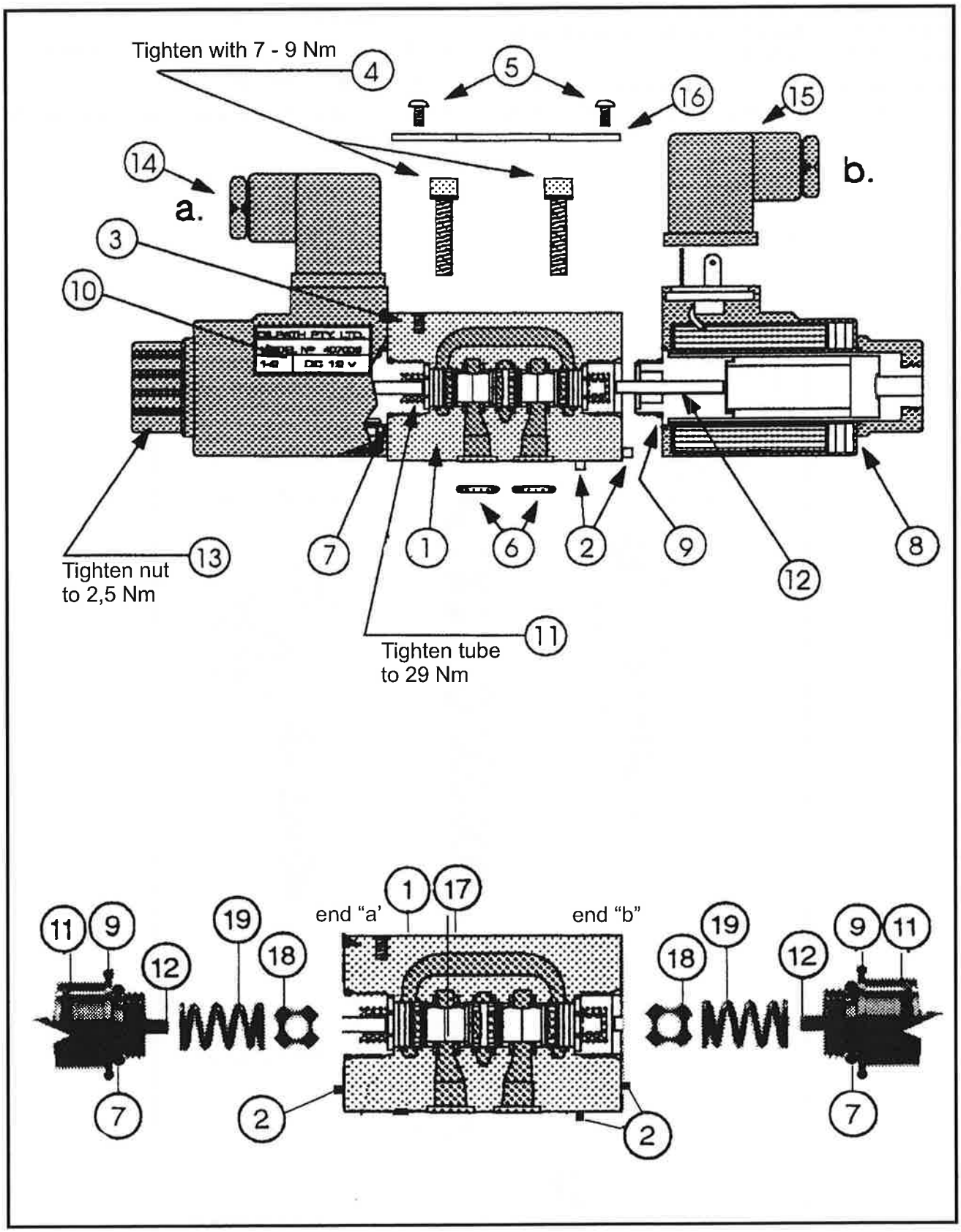
Tighten with 7 - 9 Nm
4
5
16
15
14
a.
b.
3
10
13
7
1
6
2
9
12
8
Tighten nut
to 2,5 Nm
11
Tighten tube
to 29 Nm
end "a'
end "b"
1
17
11
9
12
19
18
7
2

PRIMARY EXTRACTOR MANIFOLD

The primary extractor manifold is mounted on the rear of the engine box. Incorporated in the manifold is a proportional flow control valve which varies the primary extractor speed.

Also mounted in the manifold is a relief valve and a solenoid valve to turn the primary extractor on or off.

Overhaul

1. Remove the manifold.
2. Remove all components from the manifold.
3. Check all 'O' rings and seals as required.
4. Reassemble the manifold and refit to the machine.

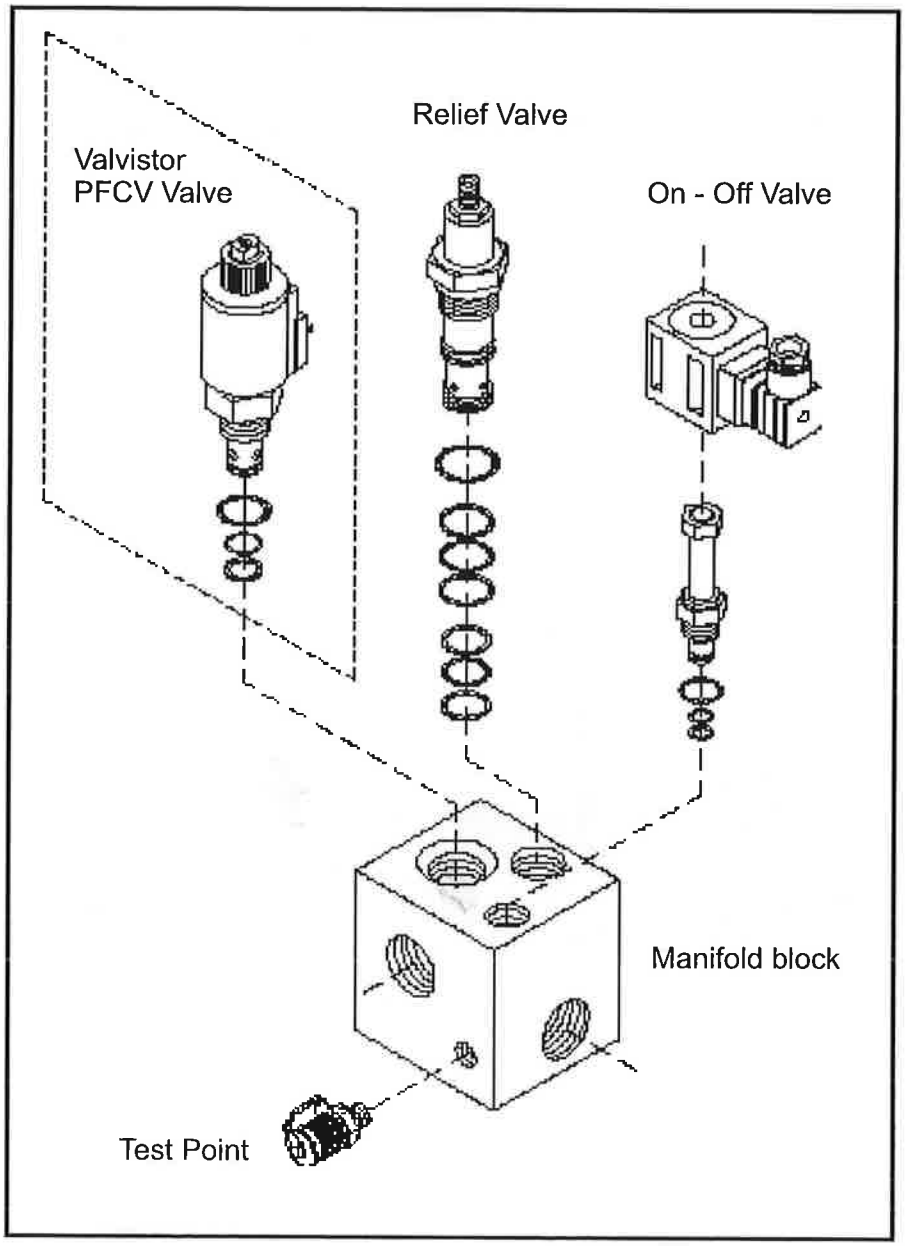

TOP FEEDROLLER PROPORTIONAL FLOW CONTROL MANIFOLD

The top feedroller proportional flow control manifold receives oil flow from one of the chopper motors. Located in the manifold is a relief valve to protect the top feedroller and a proportional flow control valve which varies the flow to the top feedroller. The change in flow will vary the feedroller speed which will change the billet length.

Overhaul

1. Remove the manifold from the machine.
2. Remove all components from the manfold.
3. Check all 'O'rings and seals for damage and replace where necessary.
4. Reassemble the manifold and refit to the machine.

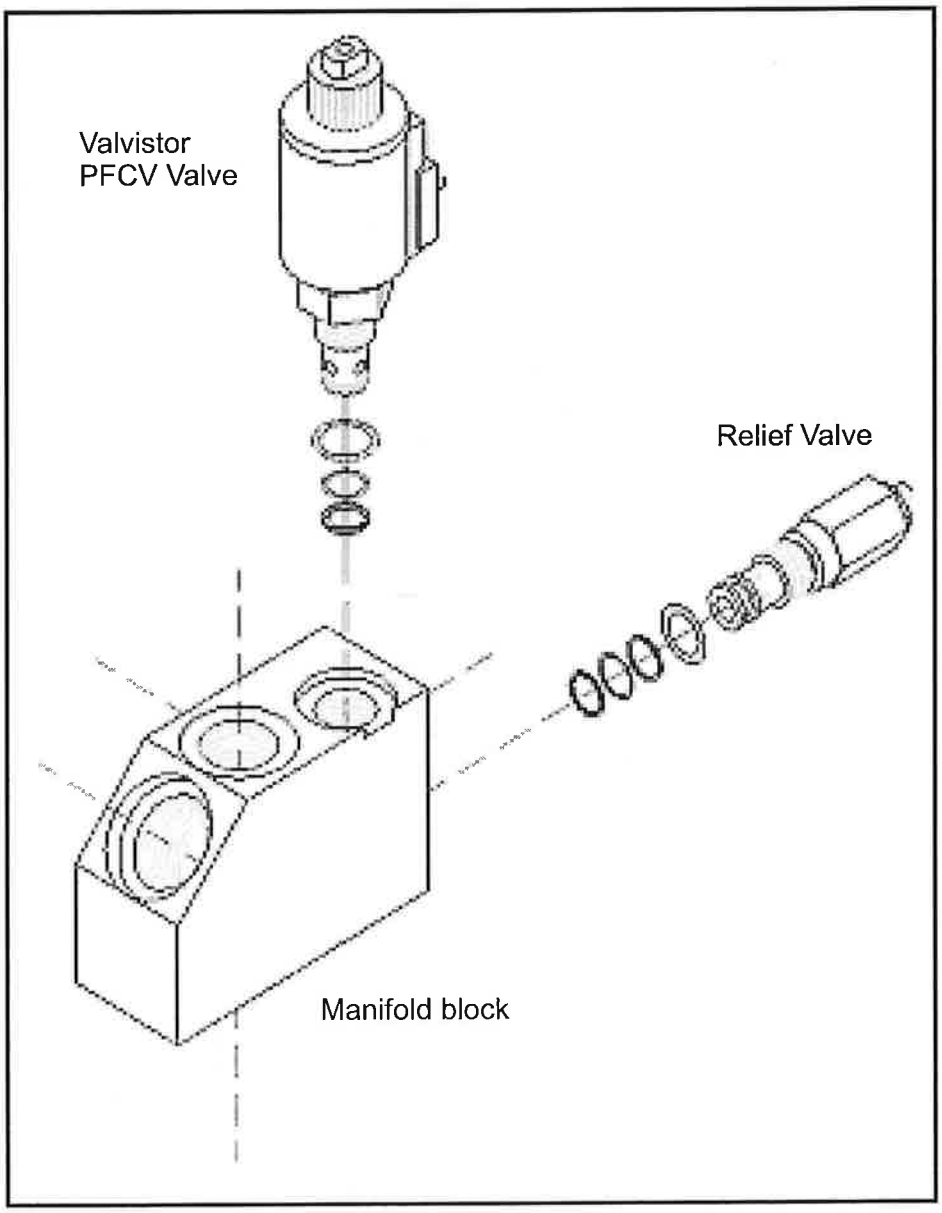

VICKERS MANIFOLD - 4 AND 6 BANKS

4 function manifold

The four function manifold that operates the cropdivider tilt and the sidetrim knife raise and lower is located under the right hand foot plate.

Located on the control are four CETOP valves for the cylinders and a solenoid valve.

Overhaul

1. Remove the manifold from the machine.
2. Remove all component from the manifold.
3. Check all 'O' rings and seals for damage and replace where necessary.
4. Reassemble the manifold and refit to the machine.

NOTE: *The repair proceedure for Cetop valves is on this manual.*

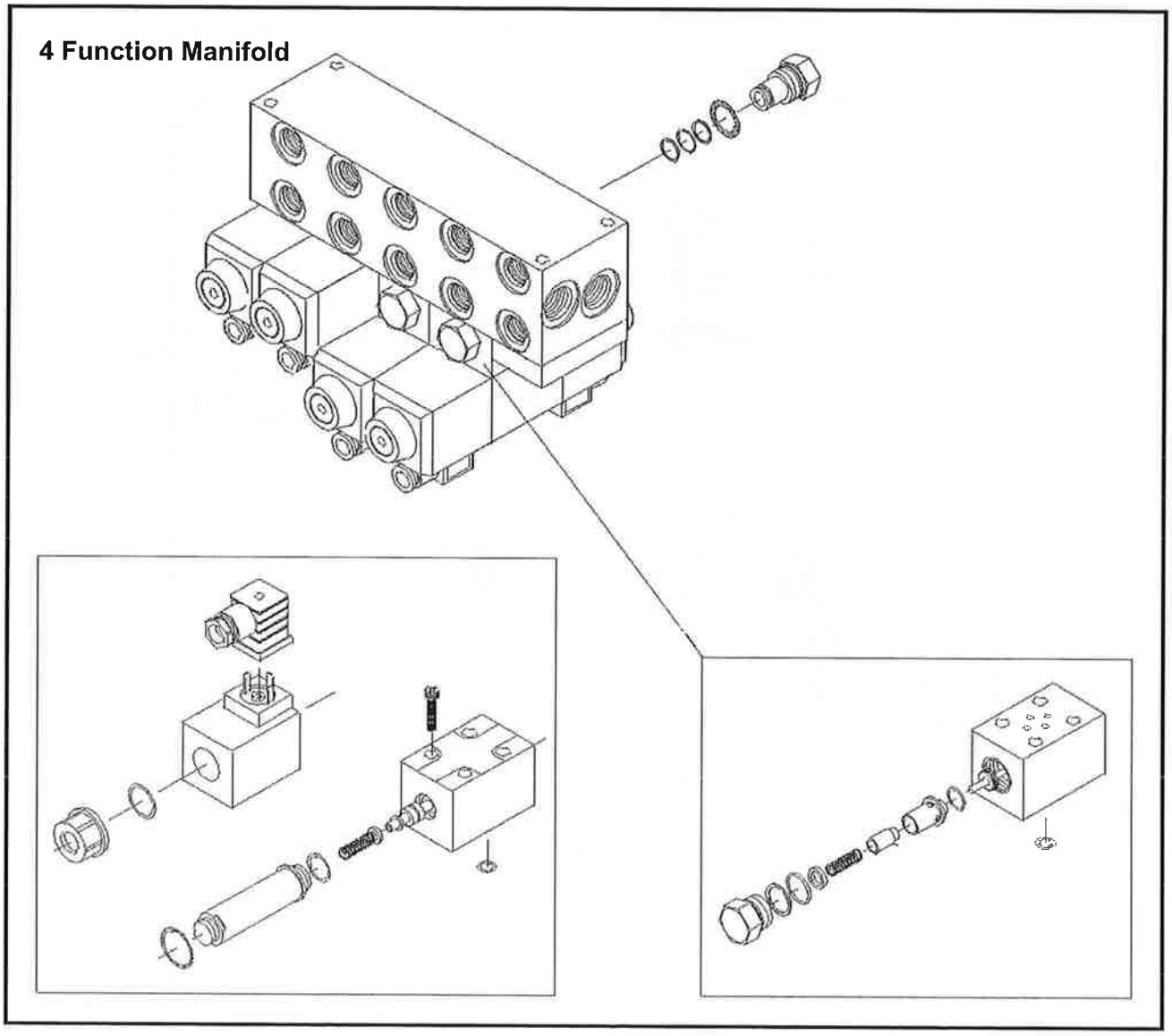

Cylinder function - 6 bank

The 6 function manifold valve that operates the basecutter raise and lower, the topper raise and lower, the cropdividers raise and lower, right and left hand sides, elevator slew and the hydraulic primary hood slew, if required is located under the right hand side foot plate and can be accessed by opening the battery door.

Located on the control are 6 Cetop 3 valve sections and 2 solenoid operated pilot valves which control the amount of oil flow to the sections (6 GPM or 12 GPM).

The Cetop 3 solenoids are operated by the various switches located in the cabin.

Overhaul

1. Remove the manifold from the machine.
2. Remova todos os componentes do bloco.
3. Remove all components from the manifold.
4. Check all O-Rings and seals for damage and replace where necessary.
5. Reassemble the manifold and refit to the machine.

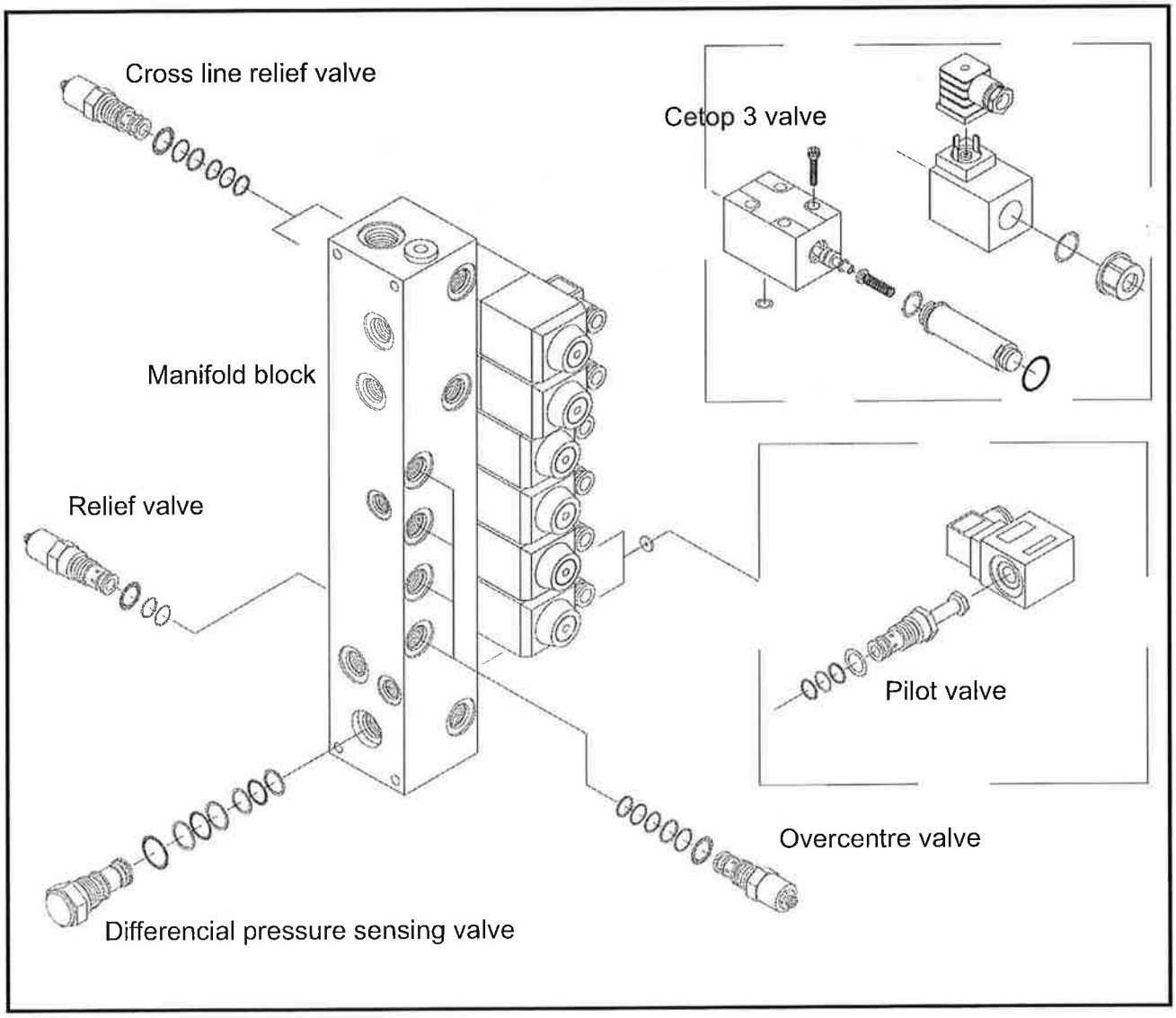

NOTES

SECTION 04 - ELECTRIC SYSTEMS

Chapter 1 - Location of Harnesses, Components and Connectors

CONTENTS

Section	Description	Page
04	Glossary	3
	Harnesses Location	6
	Layout of Harnesses	8
	Layout of Connectors	21
	Electrical Component Parts Location	22
	Scania Engine	36
	IVECO Engine	38
	Printed Circuit Board	44
	Fuses Identification	44
	Relay Identification	46

WARNING: *When performing any service or maintenance on the harvester, always turn off the main switch, located on the floor on the left side of the operator's seat. Before performing any service/repair by using electric welding, turn off the main switch and, if possible, disconnect battery cables.*

GLOSSÁRIO

All symbols used in this manual are the same found in the complete wiring diagram for the Cane Harvesters 8000 Series. The initial letter(s) correspond(s) to the element and the 3 following numbers represent the component number. In the case of connectors, there is one more number in its identification, which refers to the pins number.

Examples:

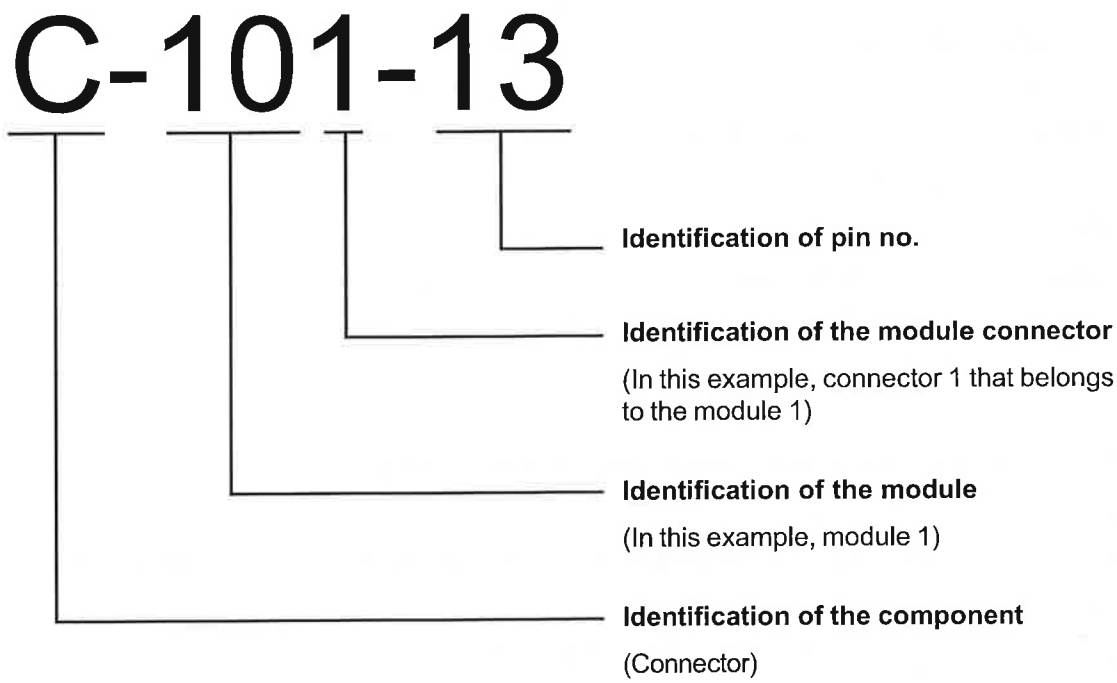

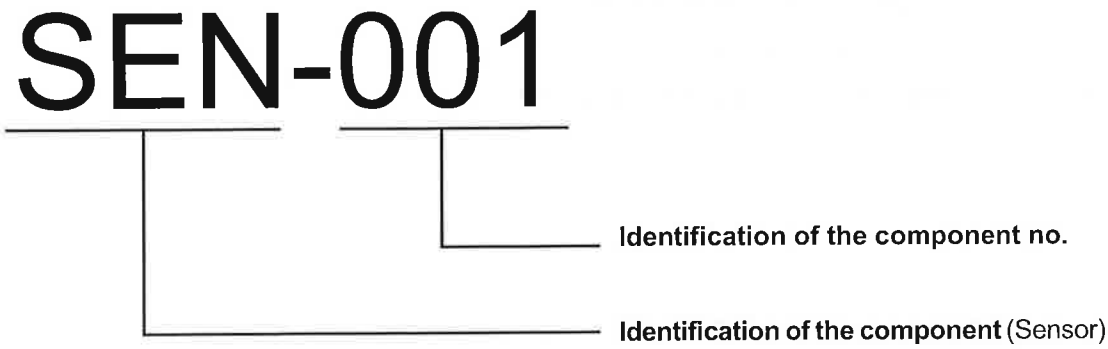

Find below the symbols used in the whole services manual and electrical maps:

ALT-XXX	Alternator
AUD-XXX	Speakers / Sound
BAT-XXX	Batteries
C-XXX-Y	Electrical connectors
CAN H	High CAN line (High)
CAN L	Low CAN line (Low)
F-XXX	Fuses
GND-XXX	Grounding points
LED-XXX	Led lights
LMP-XXX	Lamps
M-XXX	Electric motors
MOD-XXX	Location of the electronic modules
RES-XXX	Resistors
RLY-XXX	Relays
SCM-XXX	Sugar Cane Module - Modules of the Cane Harvester
SEN-XXX	Sensors
SOL-XXX	Solenoids
SPL-XXX	Splices between wires
SW-XXX	Switch / Electrical switches

Colors of the electrical cables and its respective functions:

BK	Black = Ground
WH	White = Positive functions (Functions in the clockwise direction and raising)
OR	Orange = Key switched
BL	Blue = Reference ground (Clean ground)
YE	Yellow = Sensors signal
SL	Silver = Negative functions (Functions in the counterclockwise direction and lowering)
PU	Purple = Lights cables / Lamps
RD	Red) = Direct positive
PK	Pink = Reference positive (Clean positive)

Specifications of the wiring harnesses wires

Example: Wire

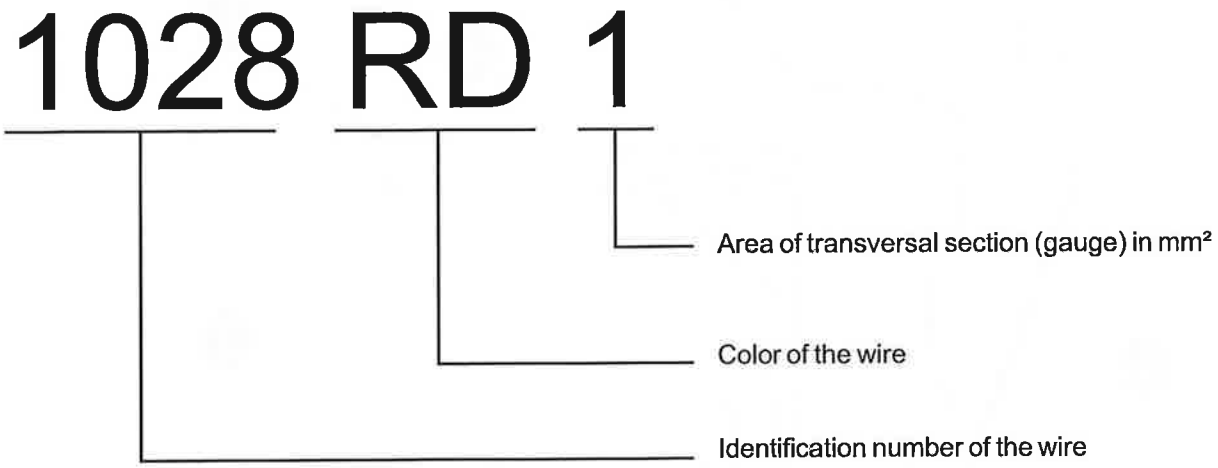

HARNESSES LOCATION

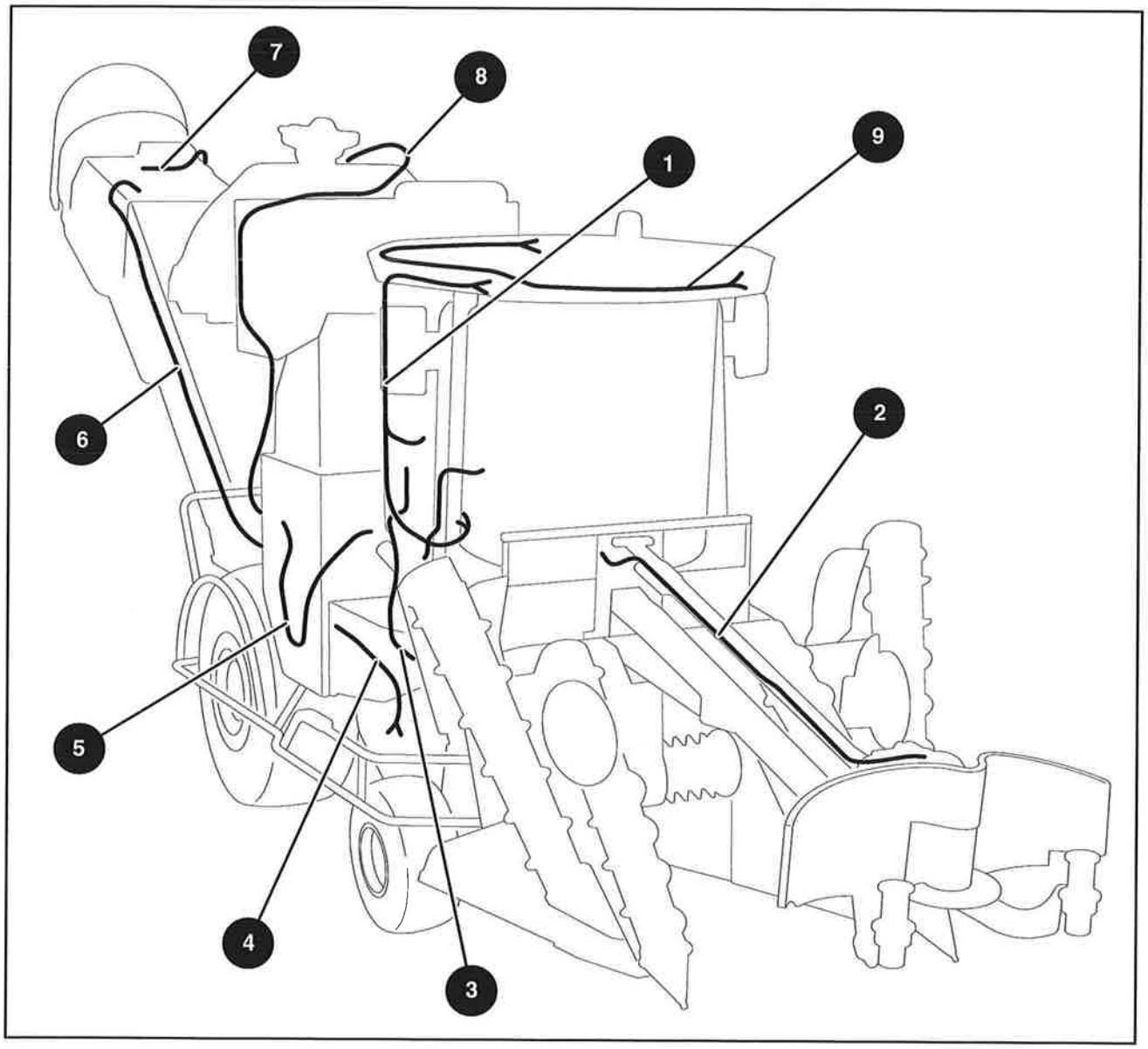

1

1 - 87697207 - Cabin Harness
2 - 87733454 - Topper Harness
3 - 87733456 - Auxiliary Block Harness
4 - 87733455 - Main Control Harness
5 - 84253504 - Engine Harness (SCANIA)
84253507 - Engine Harness (IVECO)
6 - 87733447 - Elevator Hoses Harness
7 - 87733446 - Elevator Control Harness
8 - 84254471 - Rear Right-Side Harness
9 - 87697219 - Cabin Roof Harness

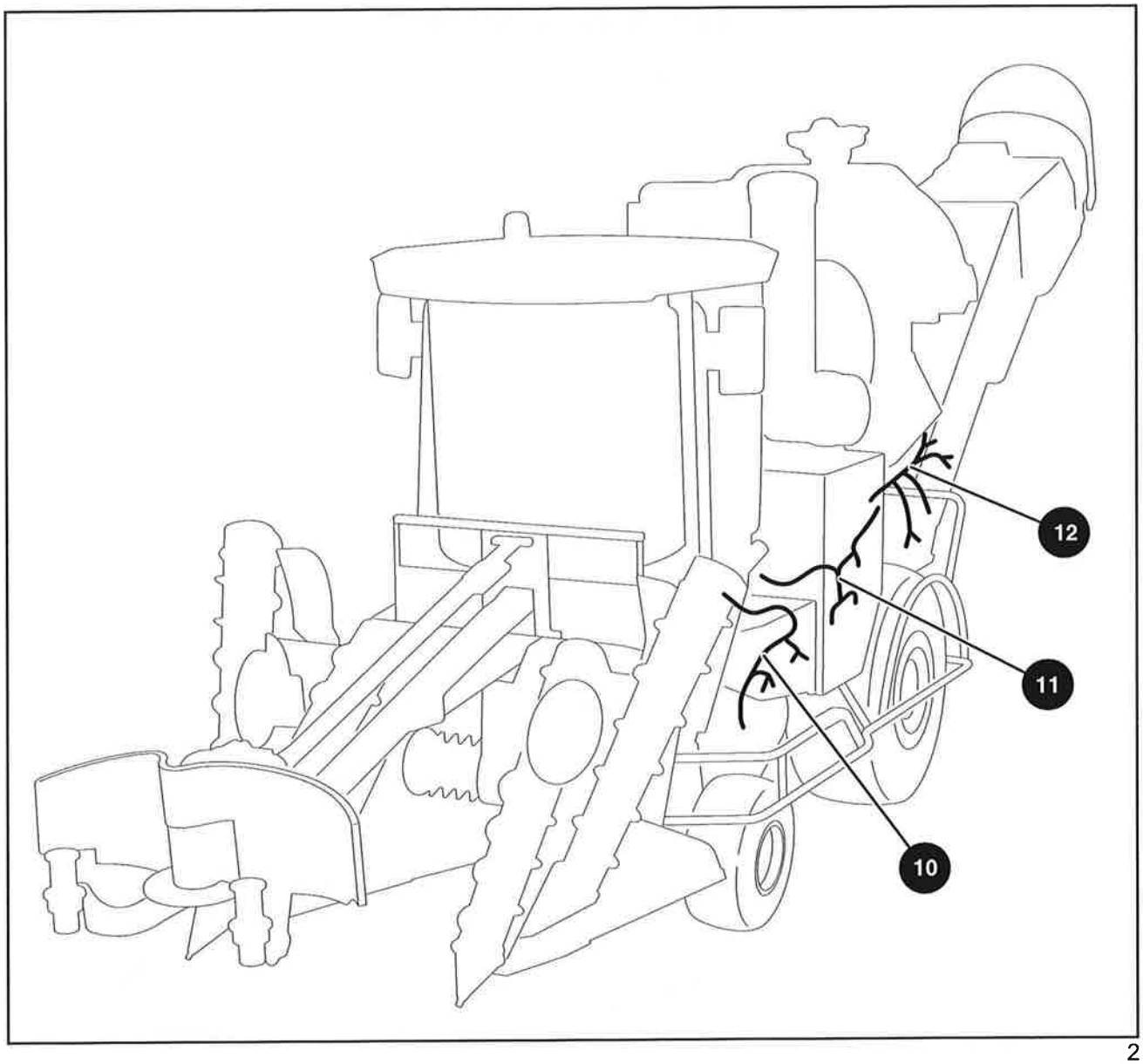

2

10 - 87733453 - Front Harness

11 - 87735777 - Traction Pumps Harness

12 - 87733451 - Rear Left-Side Harness

LAYOUT OF HARNESSES

1 - 87697207 - Cabin Harness

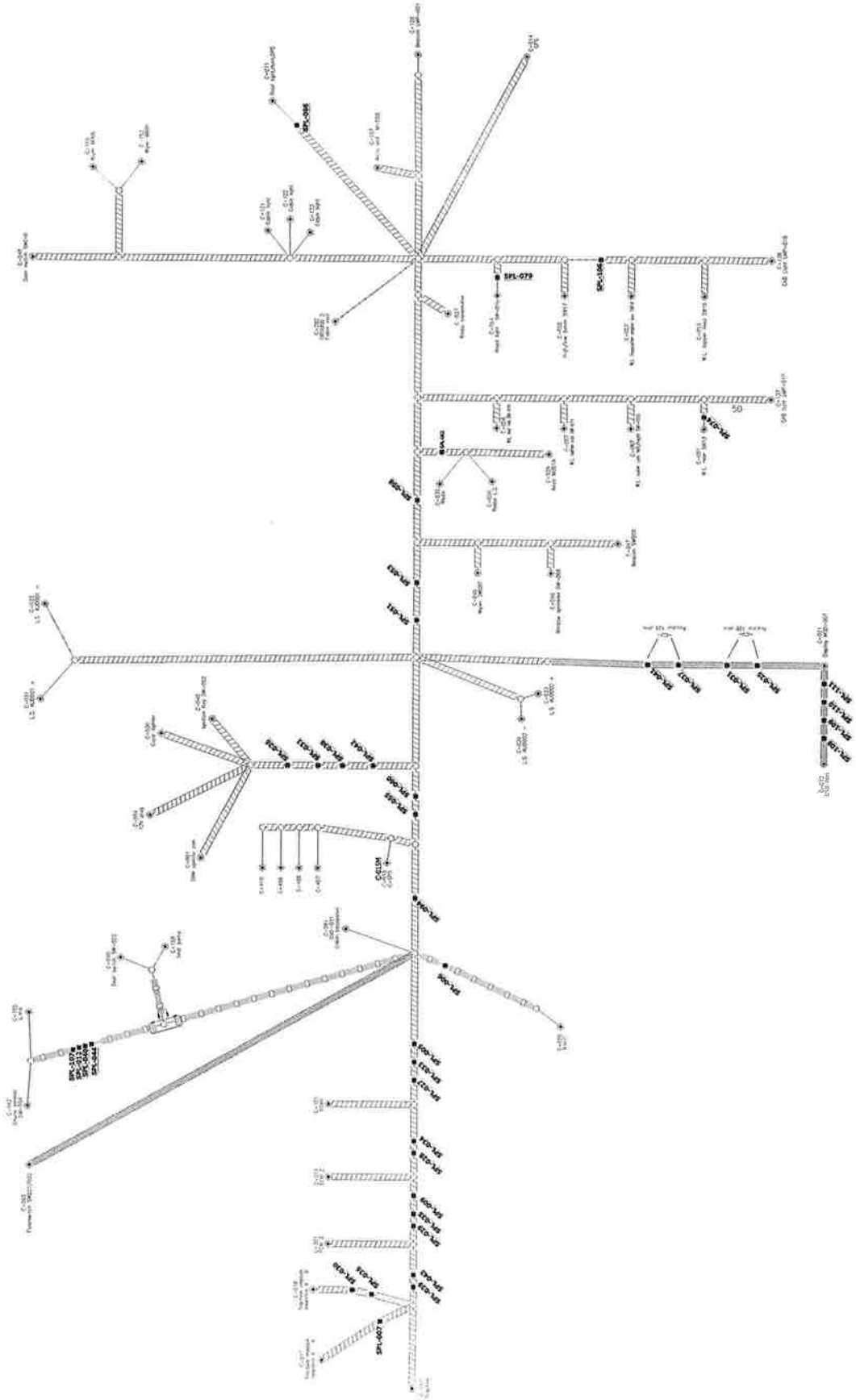

2 - 87733454 - Topper Harness

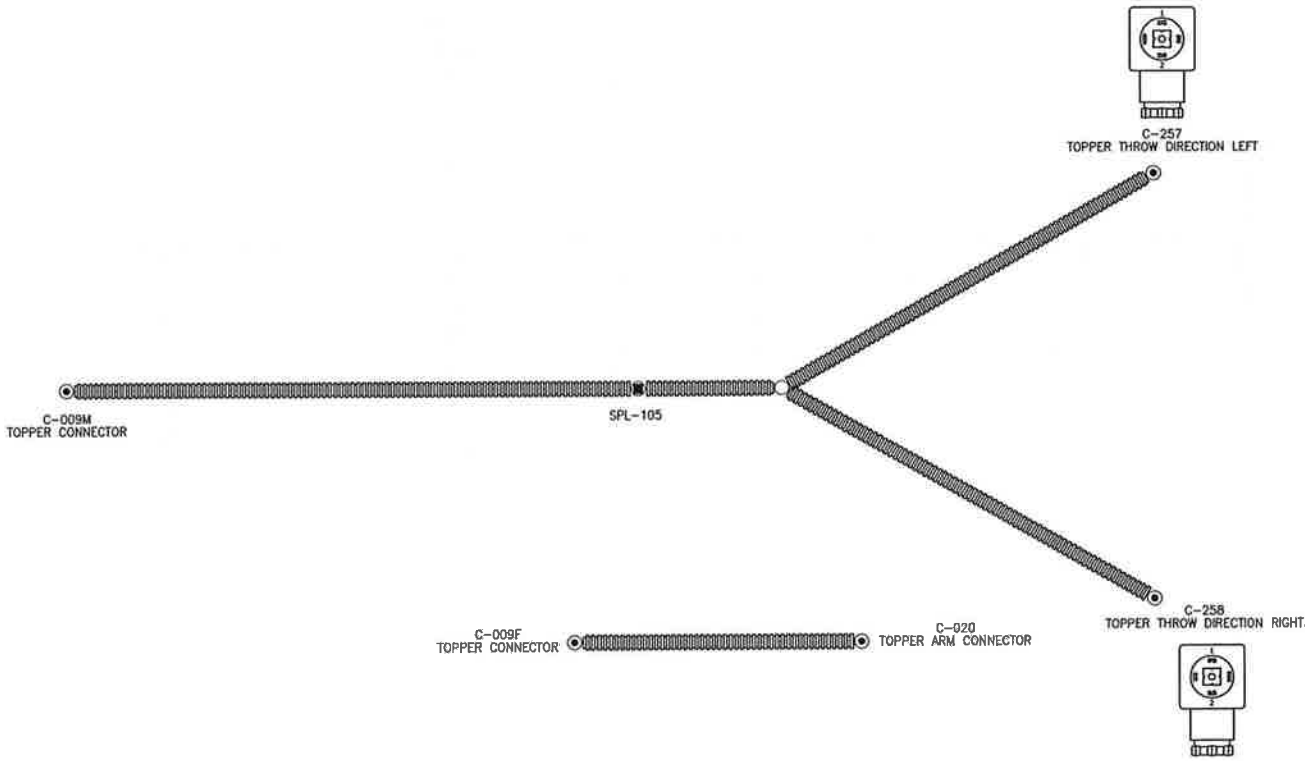

3 - 87733456 - Auxiliary Block Harness

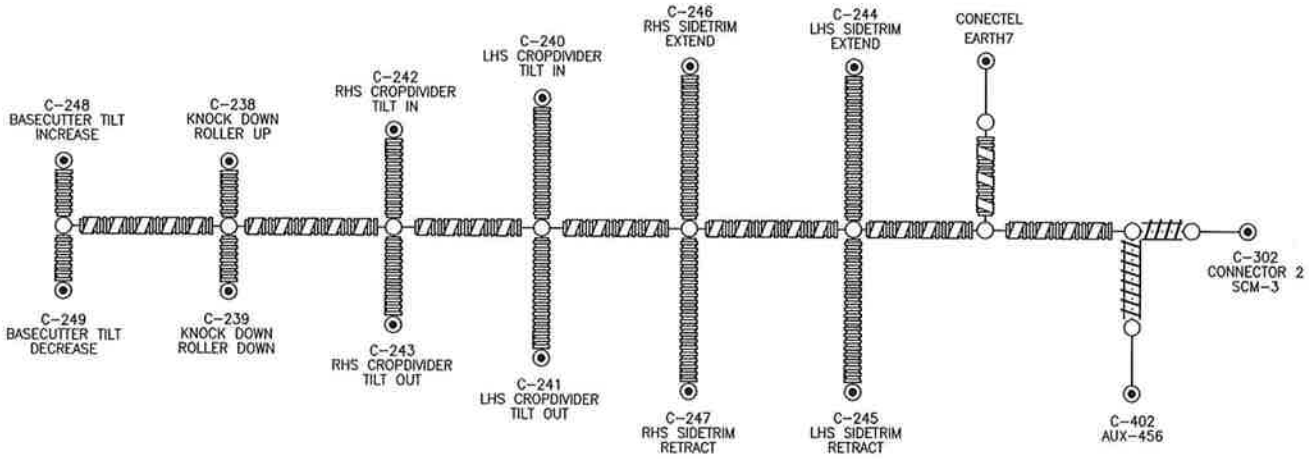

4 - 87733455 - Main Control Harness

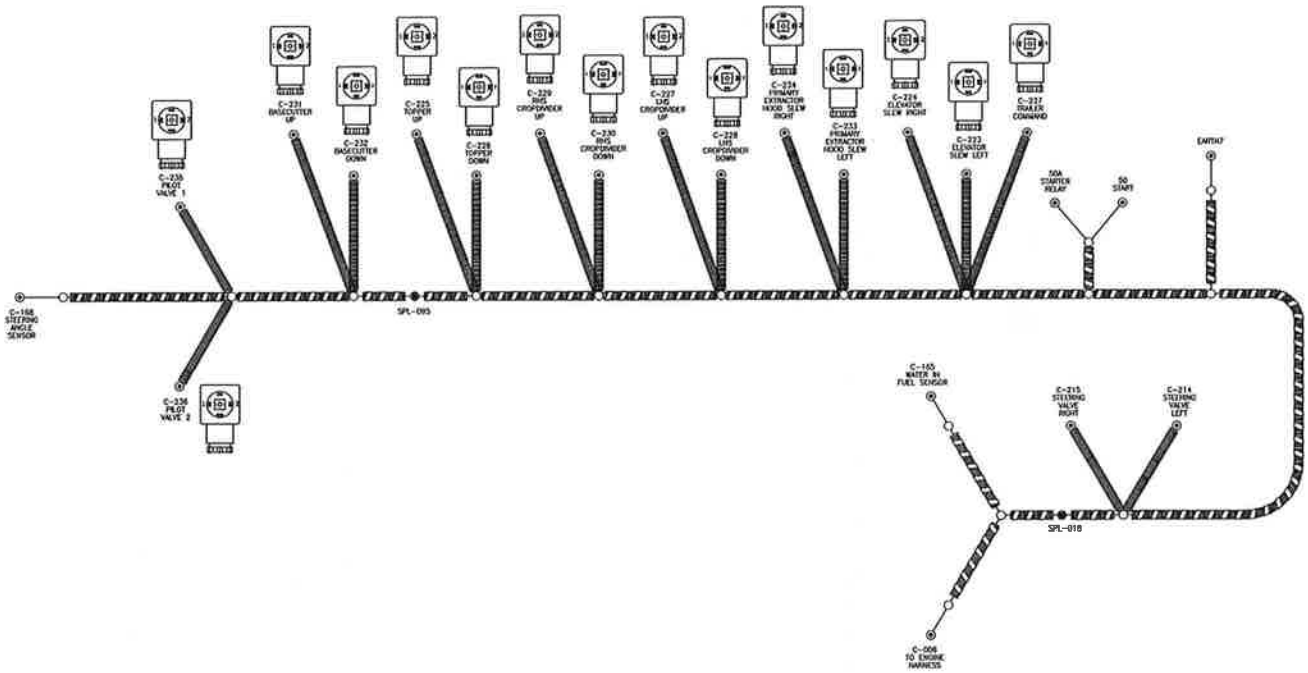

5 - 84253504 – Engine Harness (SCANIA)

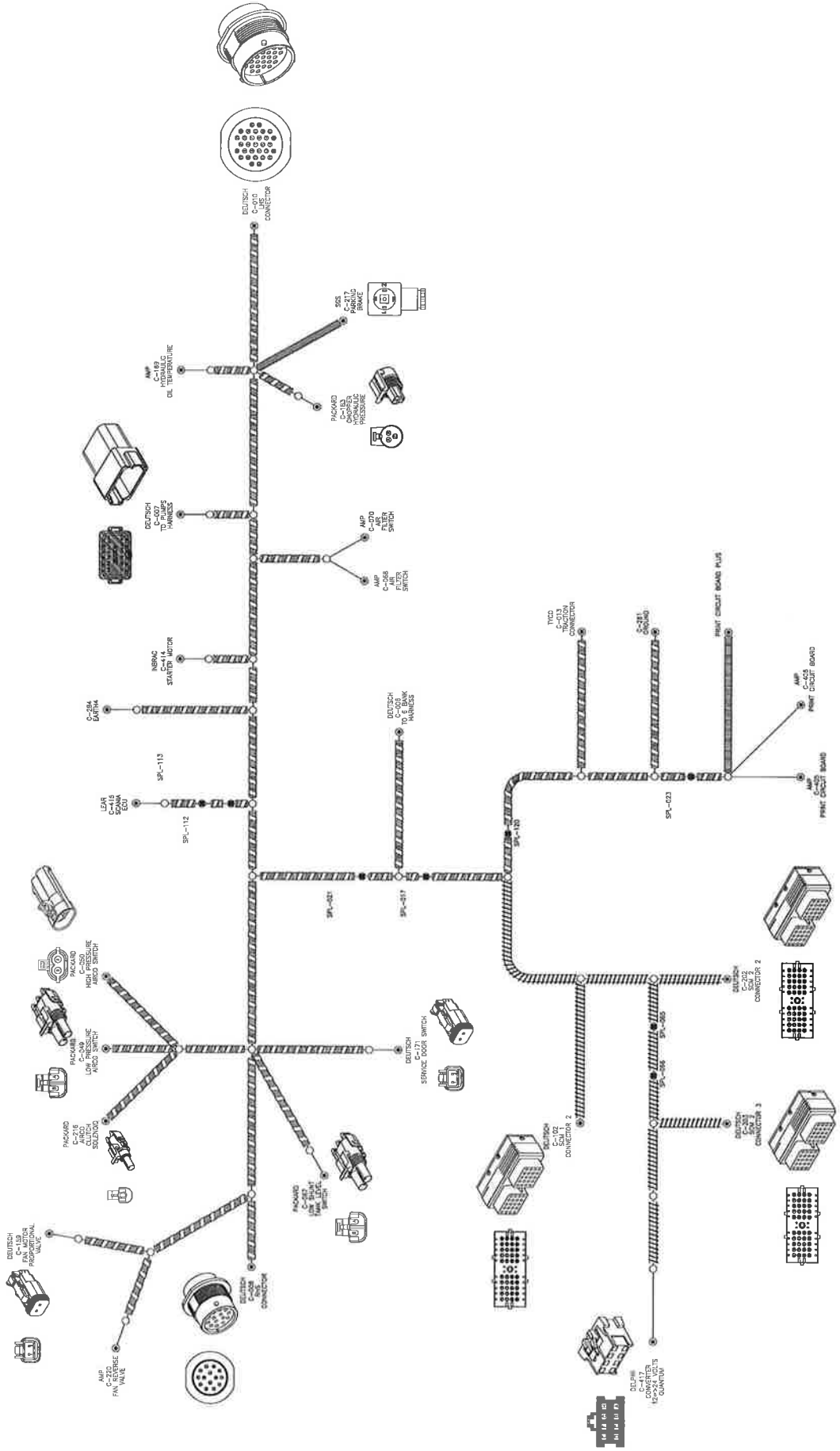

5 - 84253507 - Engine Harness (IVECO)

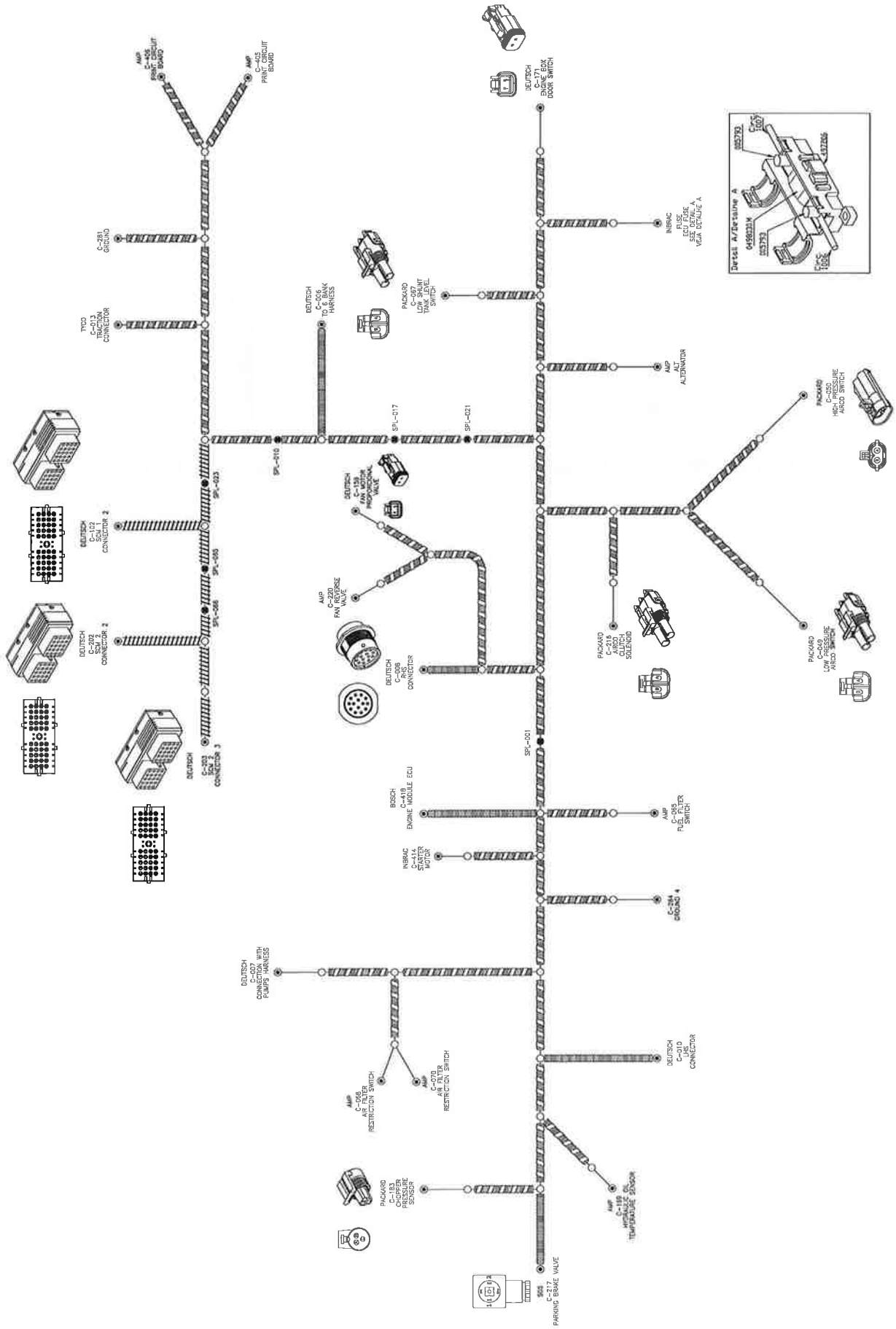

6 - 87733447 - Elevator Hoses Harness

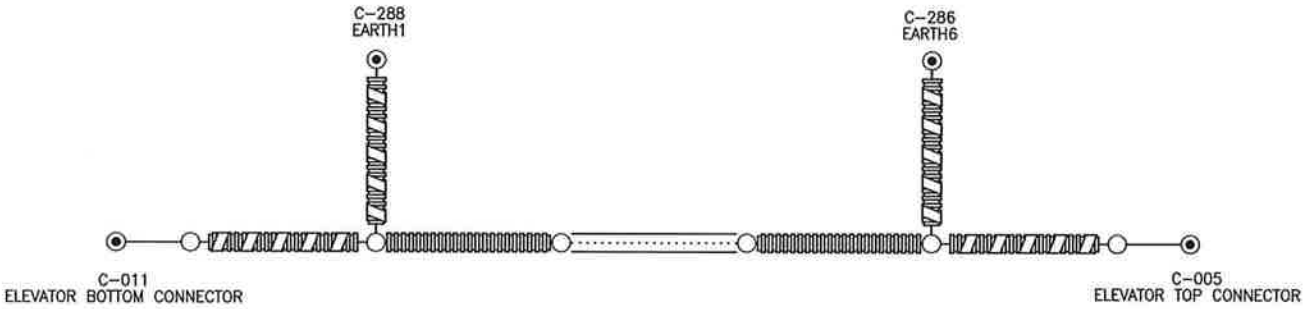

7 - 87733446 - Elevator Control Harness

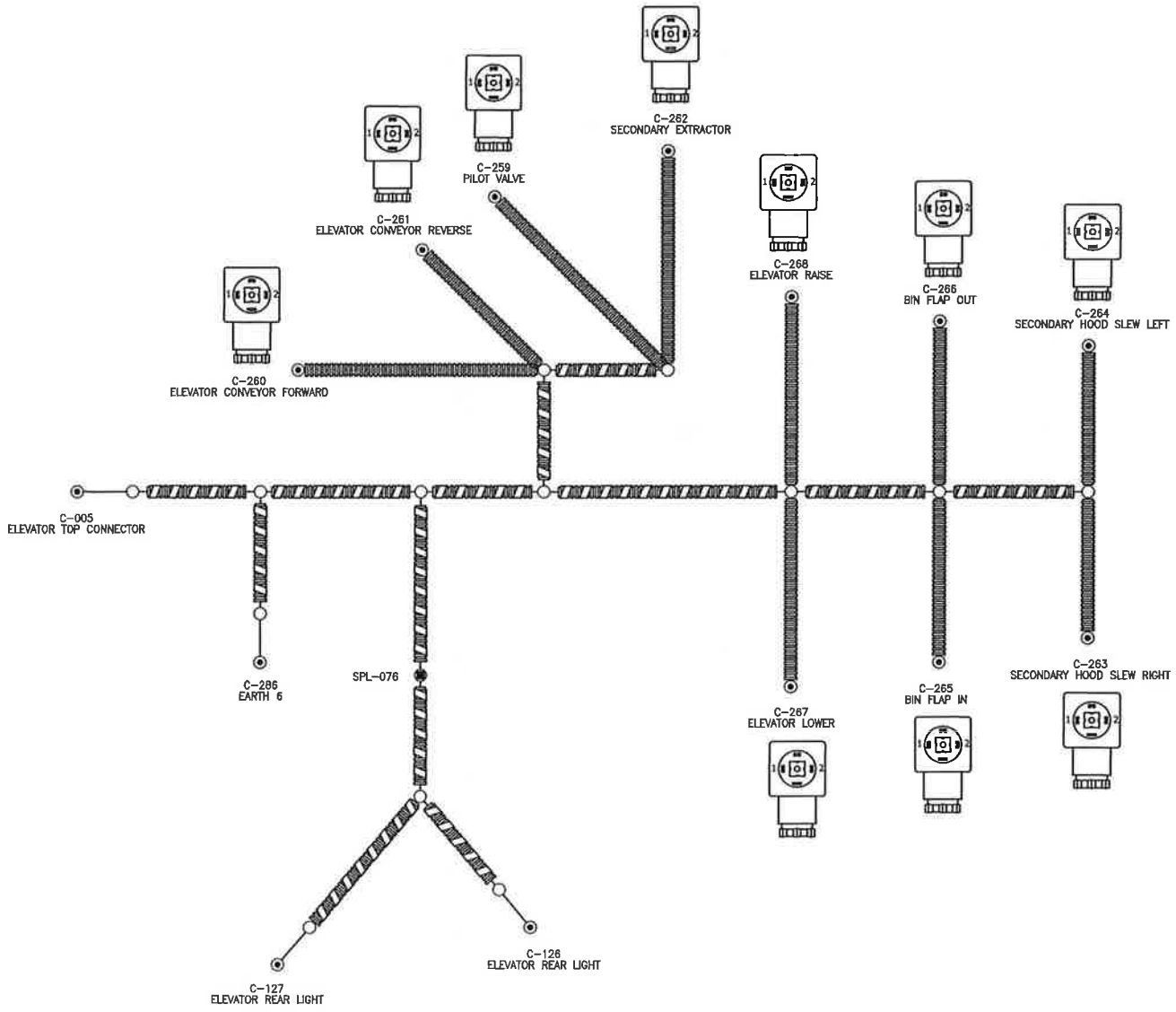

8 - 84254471 - Rear Right-Side Harness

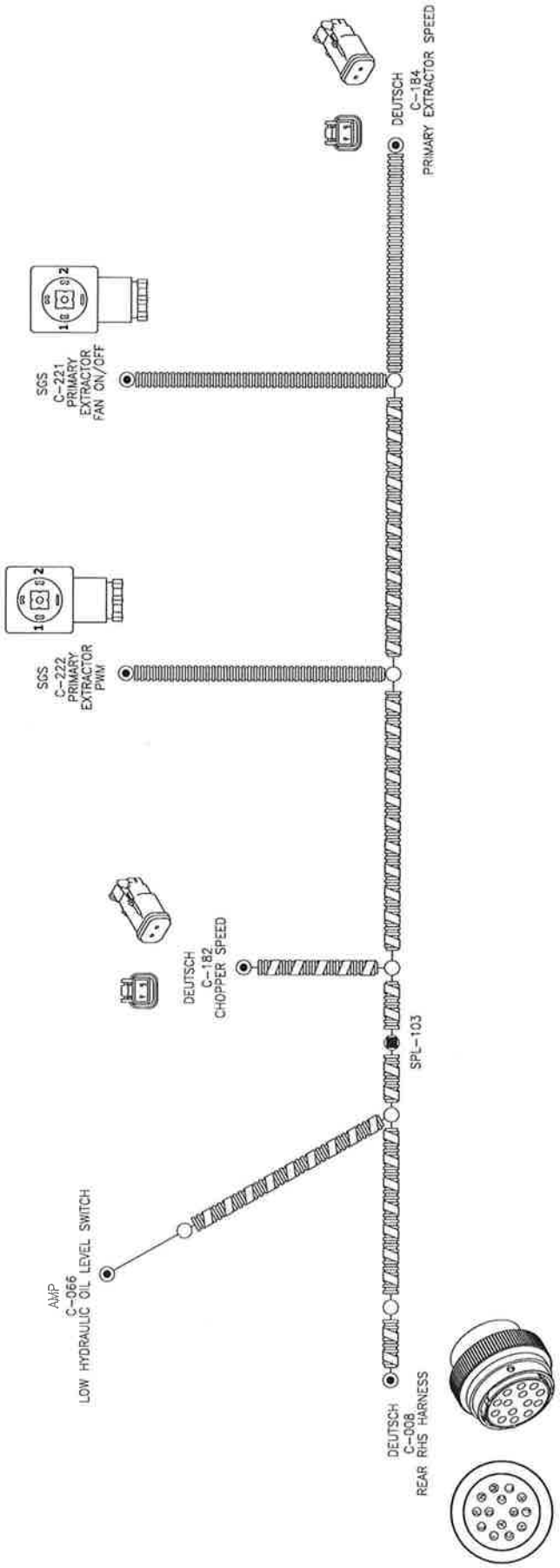

9 - 87697219 - Cabin Roof Harness

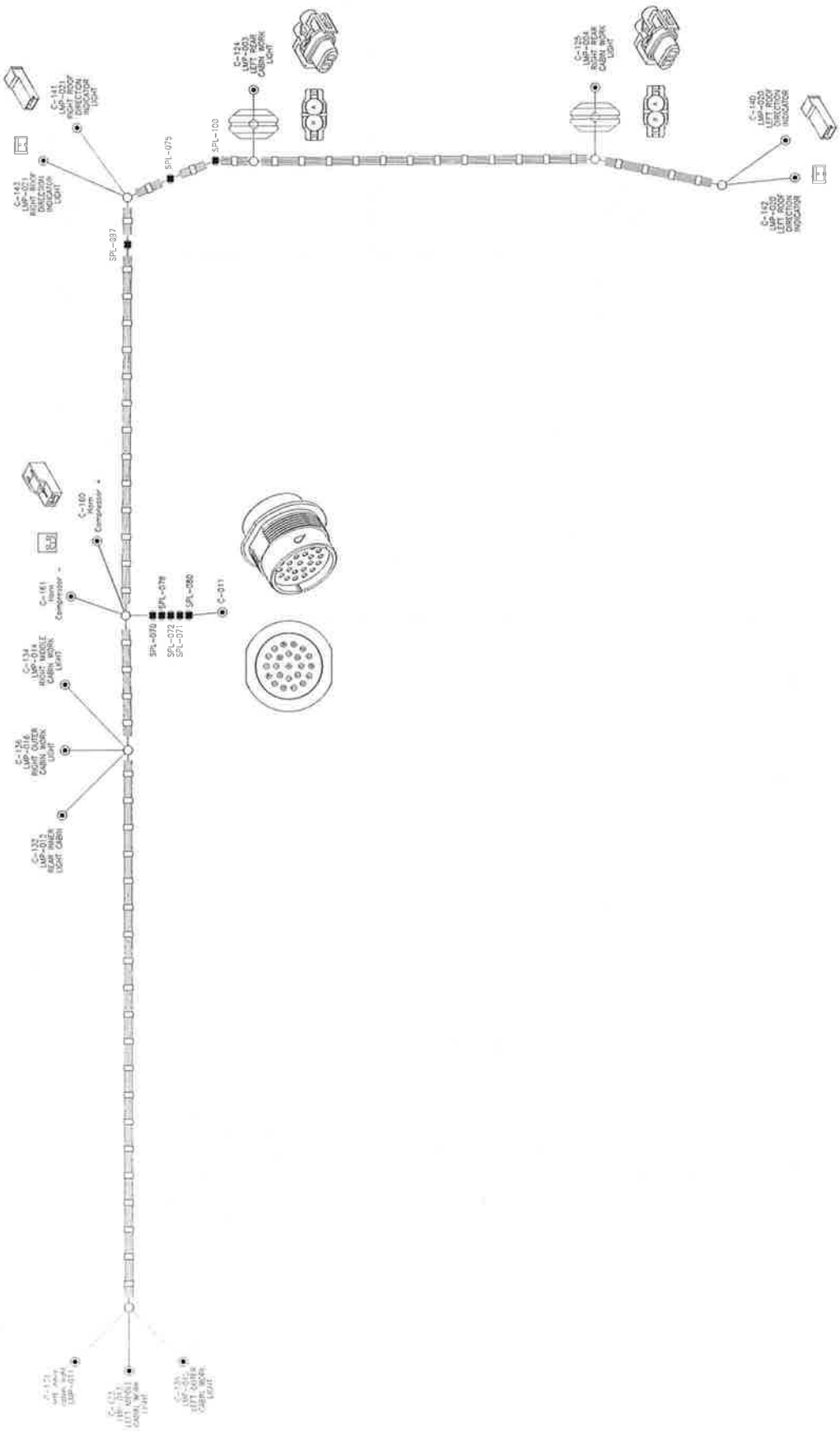

10 - 87733453 - Front Harness

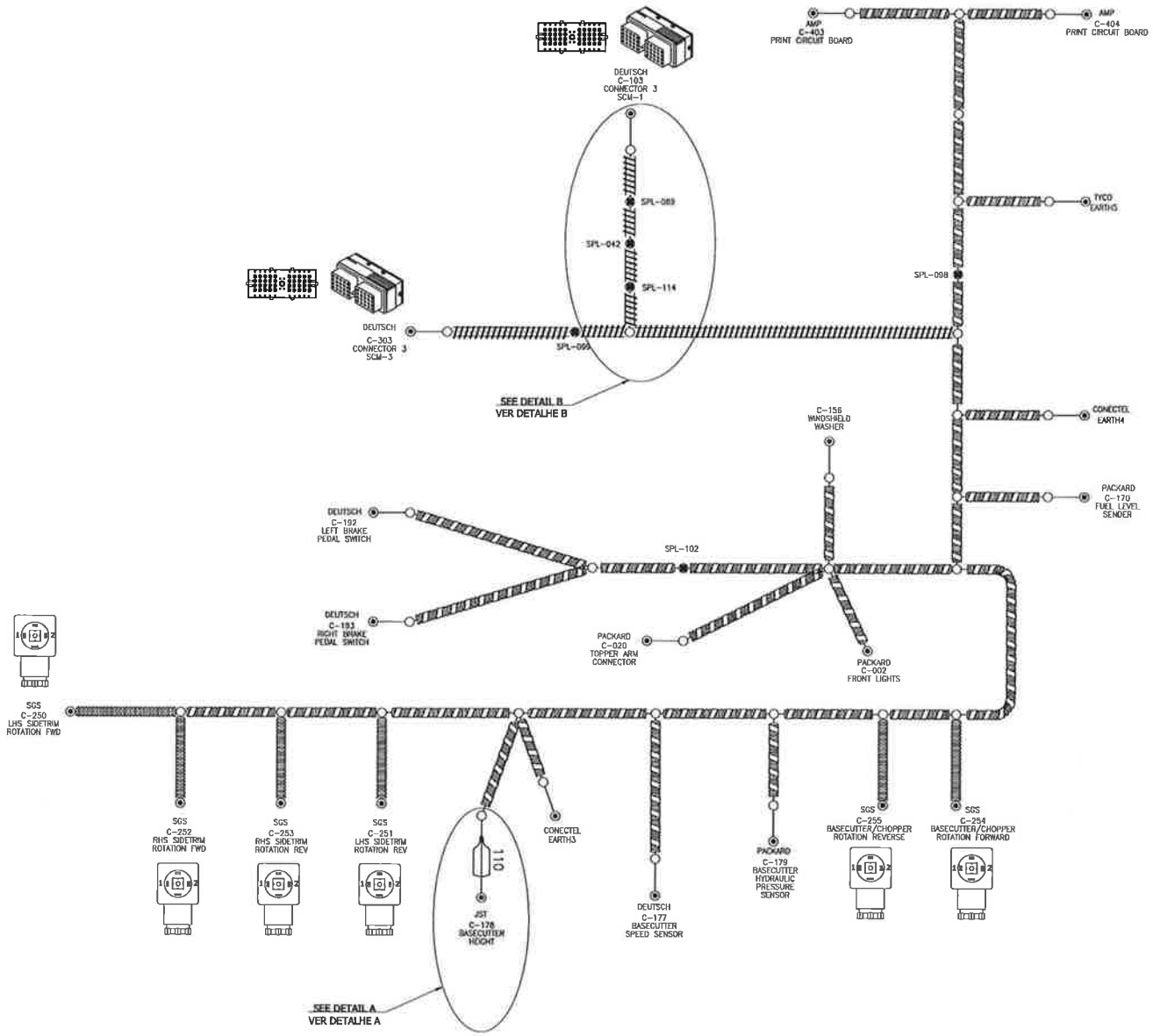

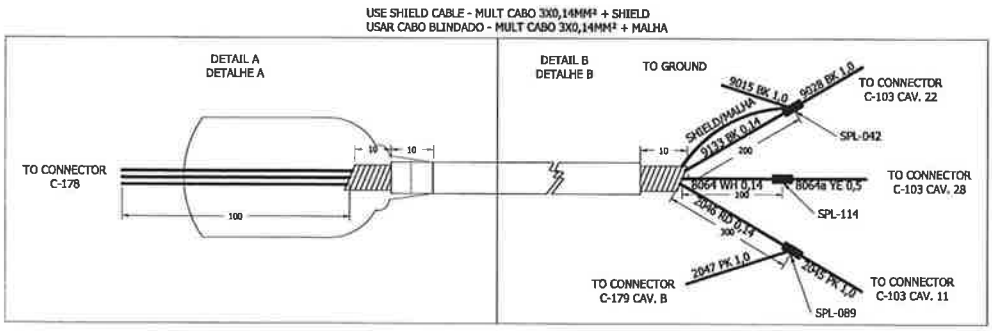

11 - 87735777 - Traction Pump Harness

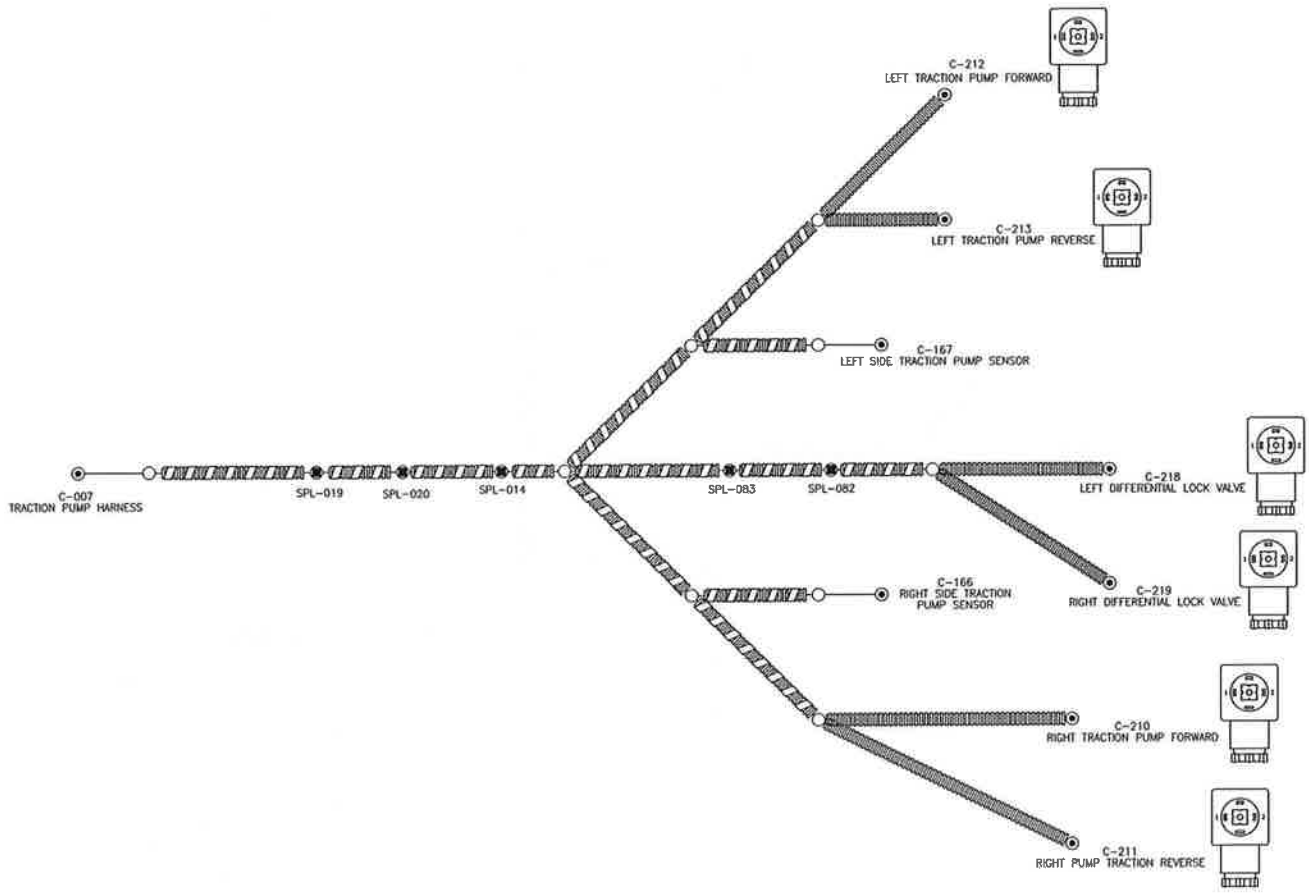

12 - 87733451 - Rear Left-Side Harness

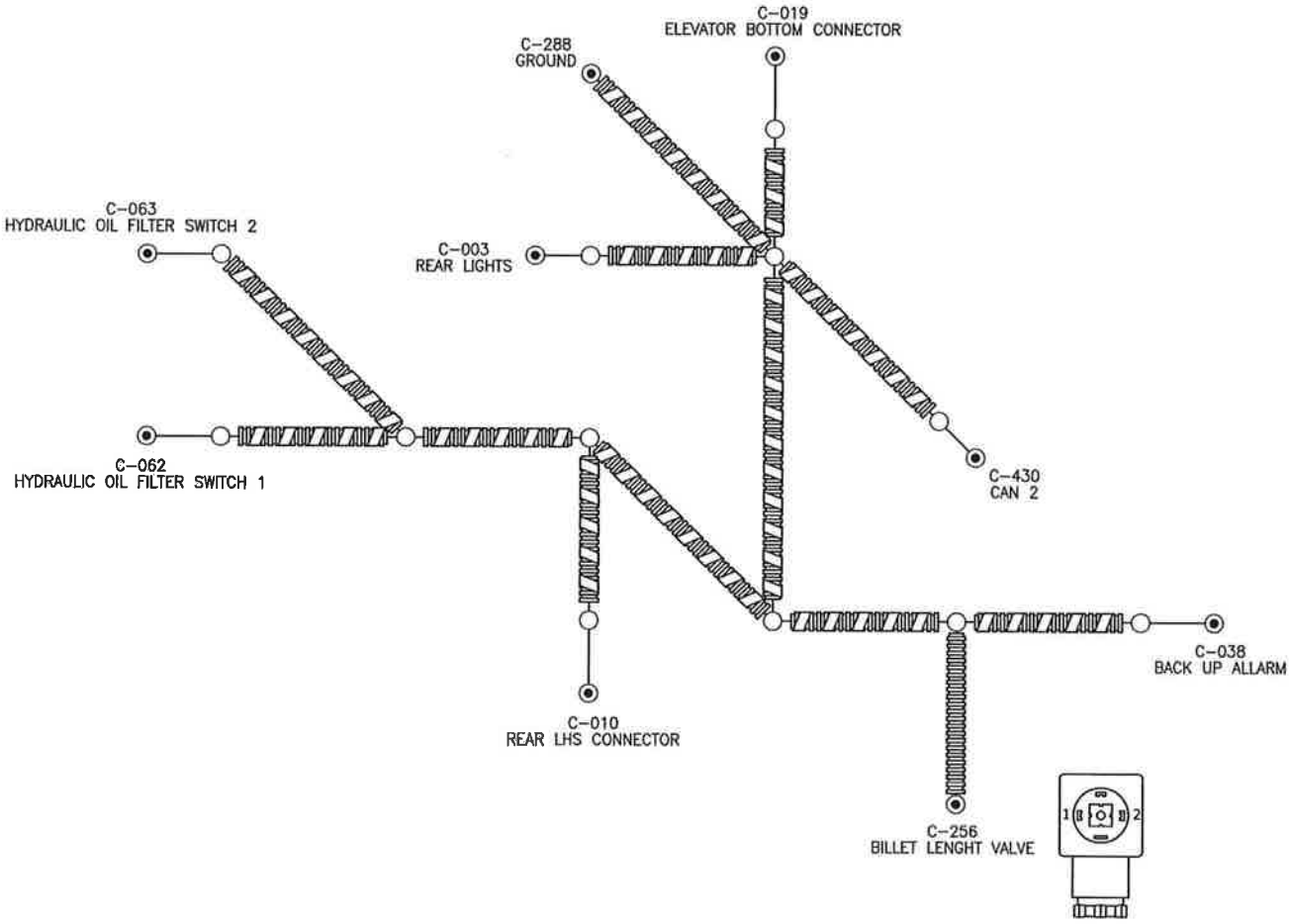

LAYOUT OF CONNECTORS

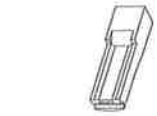

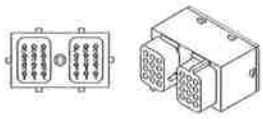

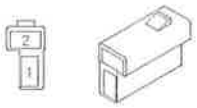

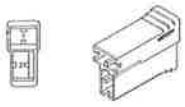

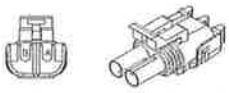

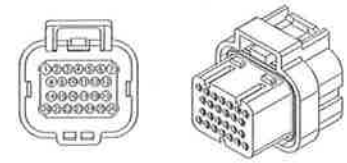

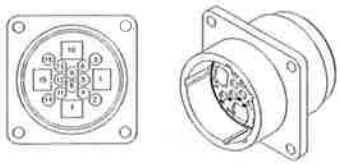

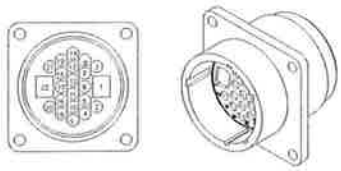

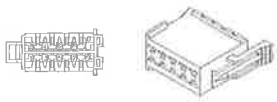

ELECTRICAL COMPONENT PARTS LOCATION

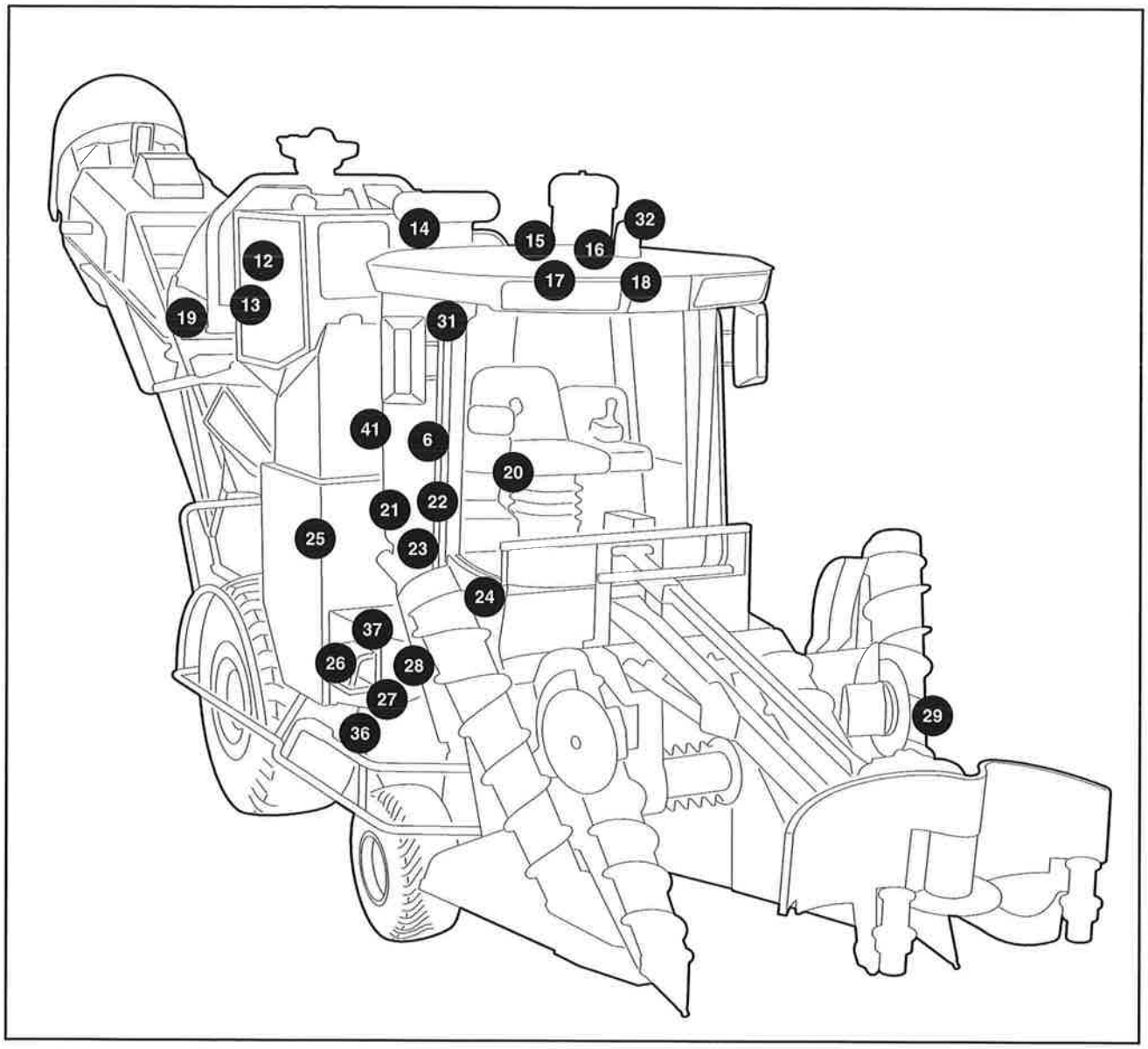

3

6 - Printed Circuit Board
12 - Extractor ON/OFF Solenoid
13 - Primary Extractor Speed Control PWM Valve Solenoid
14 - Water Level Switch
15 - GPS
16 - Antenna
17 - Fan
18 - Wiper Motor
19 - Chopper Speed Sensor
20 - Monitor
21 - Voltage Converter
22 - Traction Module Maestro II
23 - a) Module SCM1
b) Module SCM2
c) Module SCM3
24 - Brake Sensor
25 - Service Door Sensor
26 - Relay 12/24V
27 - Main Control
28 - Auxiliary Block
29 - Topper Control
31 - Horn
32 - Giroflex
36 - Water in Fuel Detection Sensor
37 - Battery
41 - Hydraulic Oil Switch

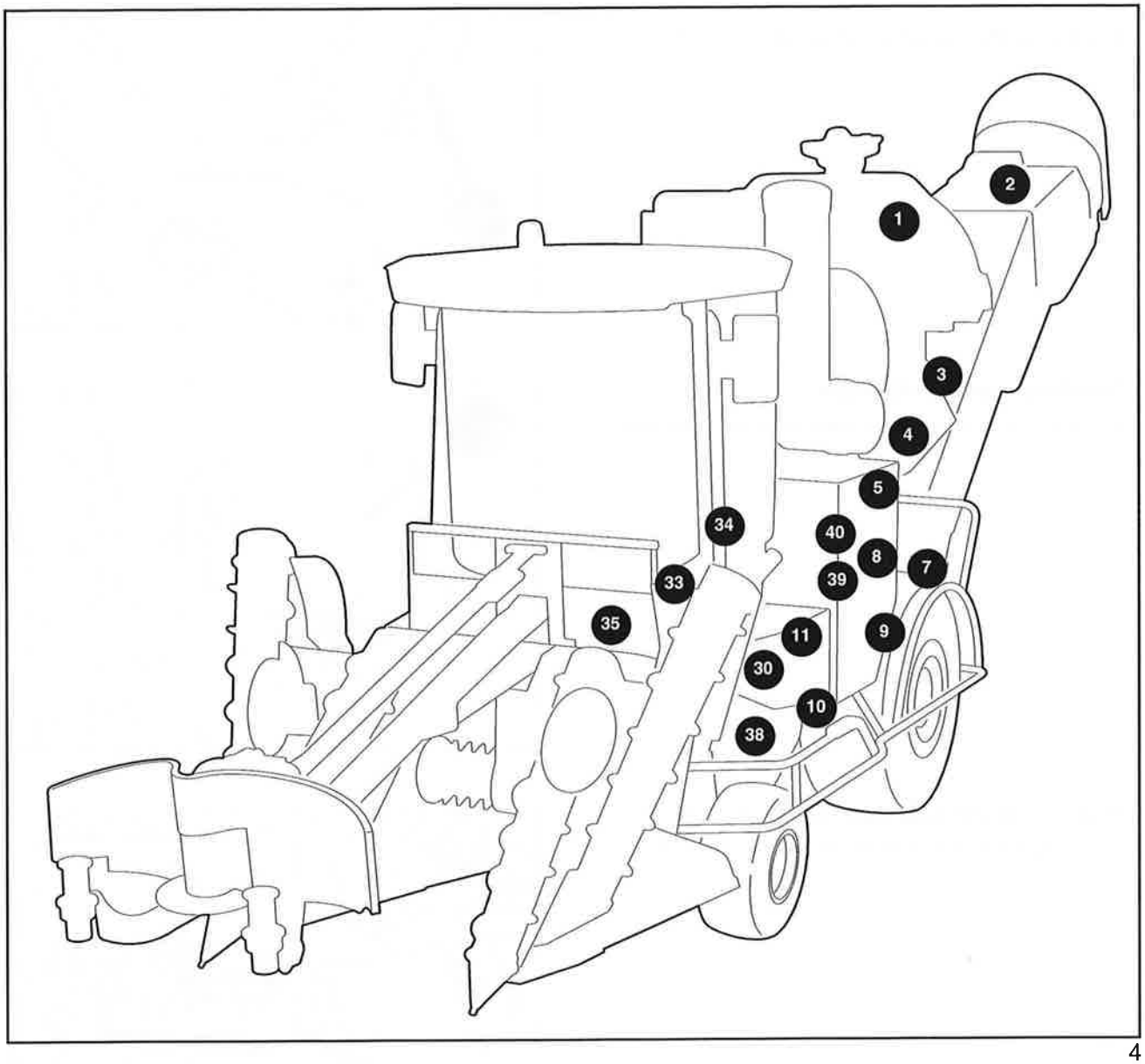

4

1 - Primary Extractor Speed Sensor
2 - Elevator Control
3 - Reverse Alarm
4 - Billet Length PWM Valve Solenoid
5 - Chopper Pressure Sensor
7 - Hydraulic Oil Restriction Vacuum Switch
8 - Hydraulic Oil Temperature Sensor
9 - Parking Brake Solenoid
10 - Basecutter Pressure Sensor
11 - Basecutter Height Sensor
30 - Side Trim Knife Control
33 - Water Reservoir Motor
34 - Main Switch
35 - Fuel Level Sensor
38 - Basecutter Rotation Sensor
39 - Traction Pump Solenoid
40 - Traction Pump Position Sensor

Inside Cabin

- **Joystick - Mod-005**
  Located in the operator's seat arm - left side.

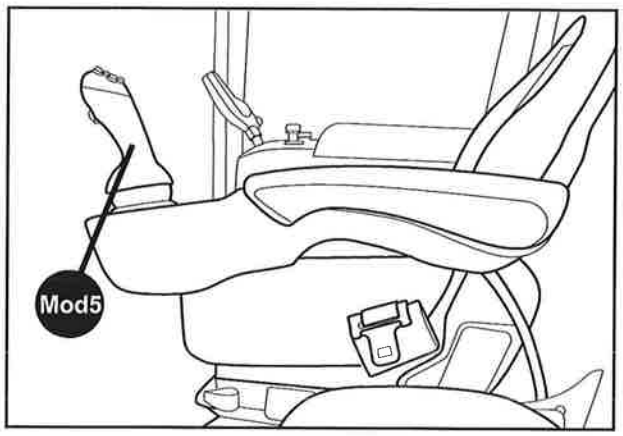

1

- **Monitor (Display) - Mod-007**
  Located in the cabin's front inner side - right side

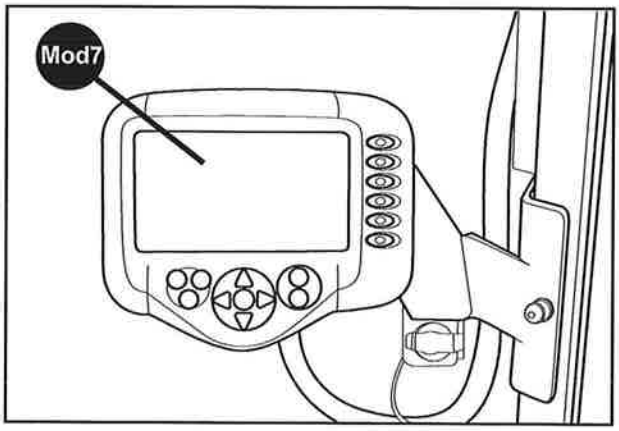

2

- **Right Hand Console Module - Mod-011 RHM**
  Located in the right hand console's inner side.

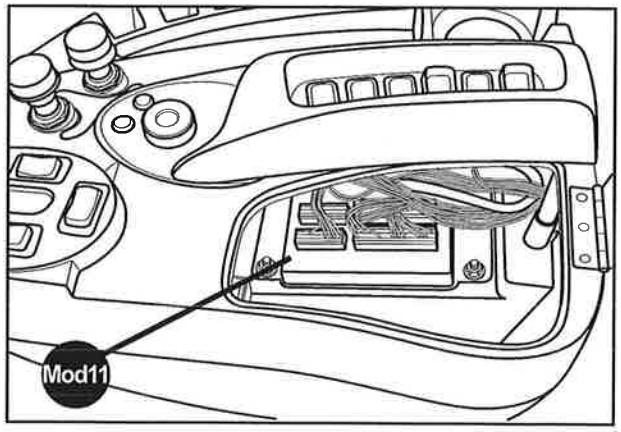

3

- **Mod-003 SCM 3 (# 28)**
- **Mod-002 SCM 2 (# 27)**
- **Mod-001 SCM 1 (# 26)**
  Located in the operator's seat - right side.

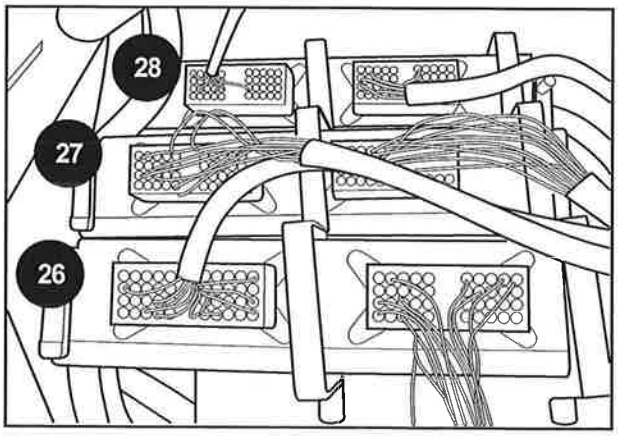

4

- **Traction Module Maestro II - Mod-004**

  Located beside the operator's seat, together with modules SCM.

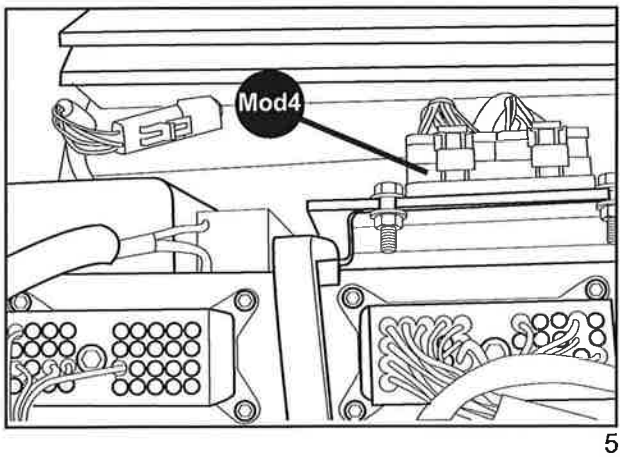

5

- **Voltage Converter 12/24V**

  Only to power supply of **Mod-006 ECU** Scania engine.

  Located beside the operator's seat, together with modules SCM.

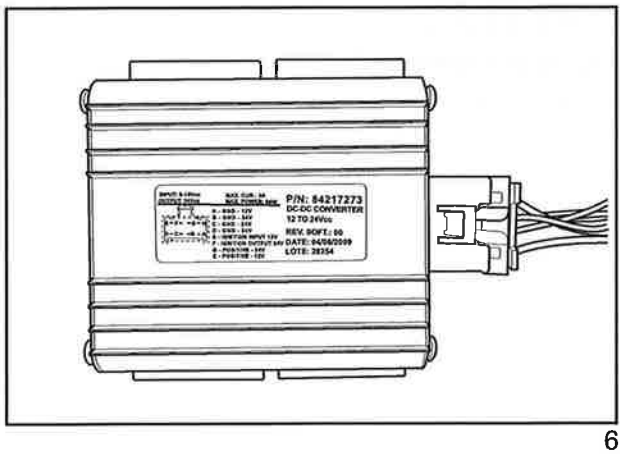

6

Cabin roof

- **Wiper Motor - M-006**

  Located in the cabin's roof.

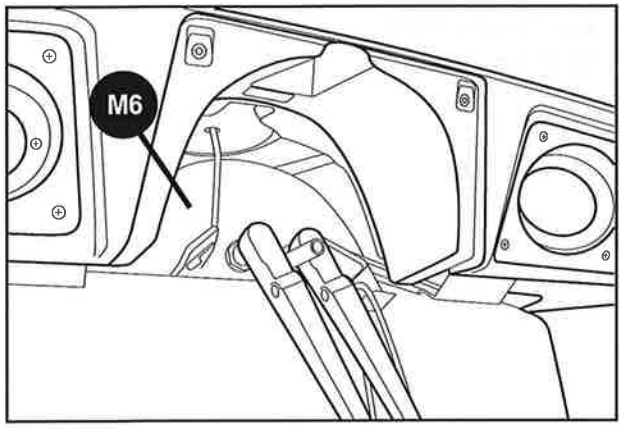

7

- **Fan - M-008**

  Located inside the black box in the cabin's roof.

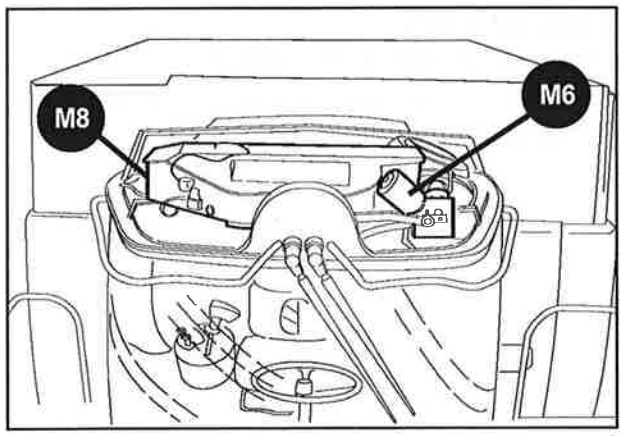

8

- **Horn Motor - M-011**
  Located in the cabin's roof – right side.

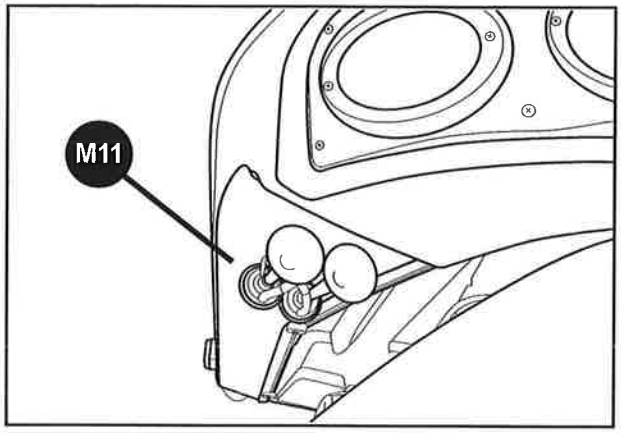

9

Over the cabin

- **GPS Standard**
  Located in the roof's upper side.

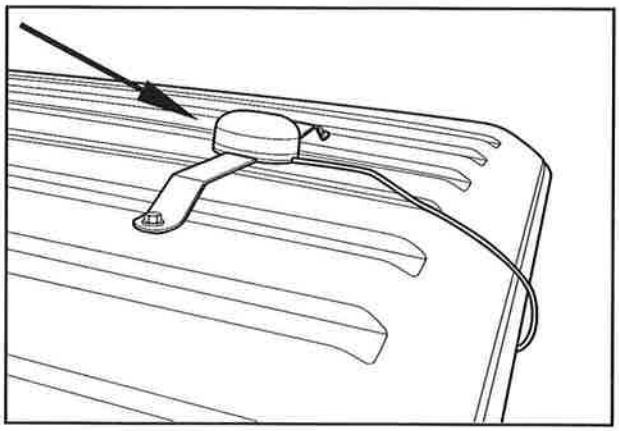

10

- **Giroflex Lim-001**
- **Radio Antenna**
  Located in the roof's upper side.

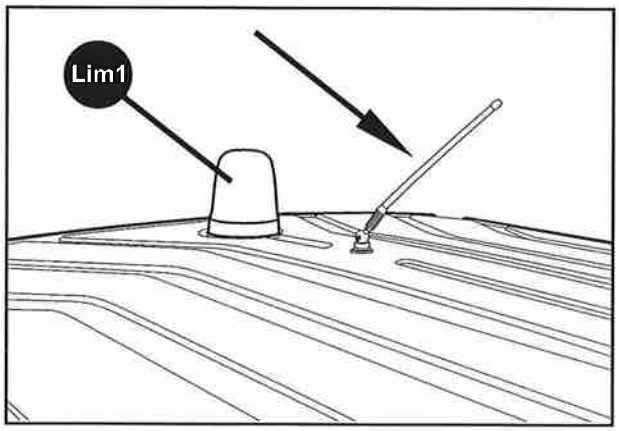

11

Below the Cabin

- **Water Reservoir Motor - M-007**
  Located in the cabin's lower side, between the chassis and the cabin.

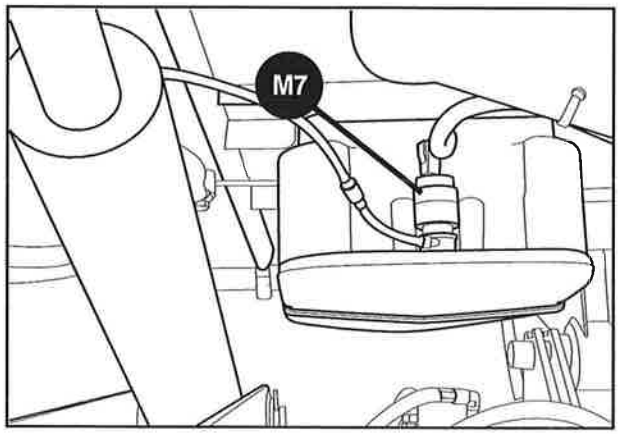

12

- **Main Switch - SW001**

  Located in the cabin's lower side, with access to the turning OFF in the cabin's inner side, beside the operator's seat.

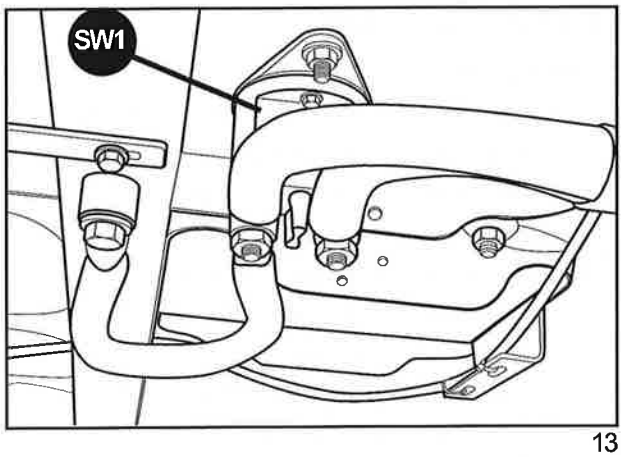

13

- **Brake Sensor SEN-031/032** used only in machines 8000

  Located under the cab.

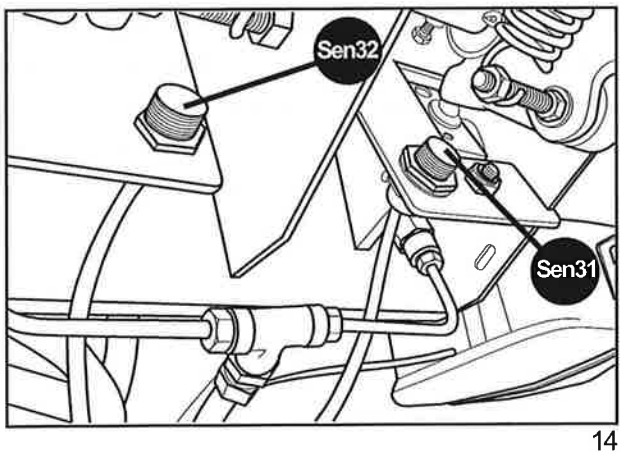

14

- **Fuel Level Sensor - SEN-006**

  Located under the cab.

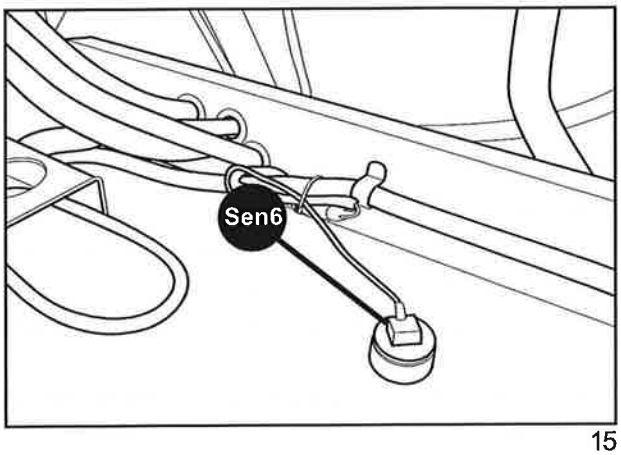

15

CHASSIS – RIGHT SIDE

- **Main Control**

Located in the chassis's right side, under the floor. The access is through the battery cover.

1 - Pilot valve 1 solenoid SOL-026
2 - Pilot valve 2 solenoid SOL-027
3 - Suspension up solenoid SOL-022
4 - Suspension down solenoid SOL-023
5 - Topper arm up solenoid SOL-016
6 - Topper arm down solenoid SOL-017
7 - Right-side cropdivider up solenoid SOL-020
8 - Right-side cropdivider down solenoid SOL-021
9 - Left-side cropdivider up solenoid SOL-018
10 - Left-side cropdivider down solenoid SOL-019
11 - Primary extractor hood right slew solenoid SOL-025
12 - Primary extractor hood left slew solenoid SOL-024
13 - Elevator right slew solenoid SOL-015
14 - Elevator left slew solenoid SOL-014

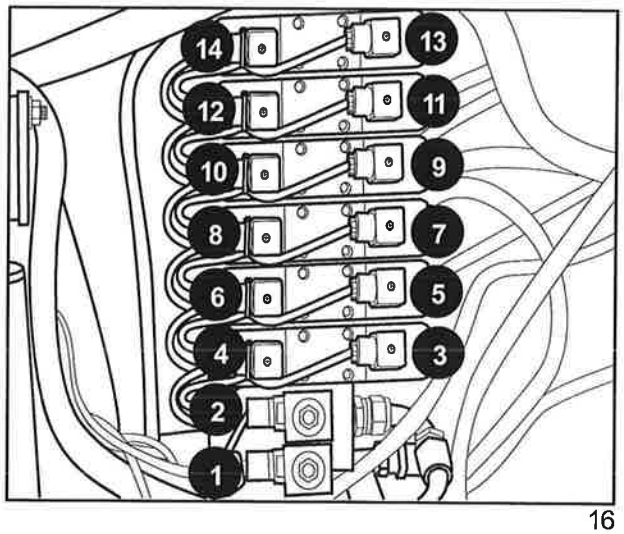

16

- **Auxiliary Block**

Located in the chassis's right side, under the floor. The access is through the battery cover.

1 - Knock down roller solenoid SOL-030 (to inside)
2 - Knock down roller solenoid SOL-029 (to outside)
3 - Right-side cropdivider tilt solenoid SOL-033 (to inside)
4 - Right-side cropdivider tilt solenoid SOL-034 (to outside)
5 - Left-side cropdivider tilt solenoid SOL-031 (to inside)
6 - Left-side cropdivider tilt solenoid SOL-032 (to outside)
7 - Right-side side trim knife solenoid SOL-037 (extend)
8 - Right-side side trim knife solenoid SOL-038 (retract)
9 - Left-side side trim knife solenoid SOL-035 (extend)
10 - Left-side side trim knife solenoid SOL-036 (retract)

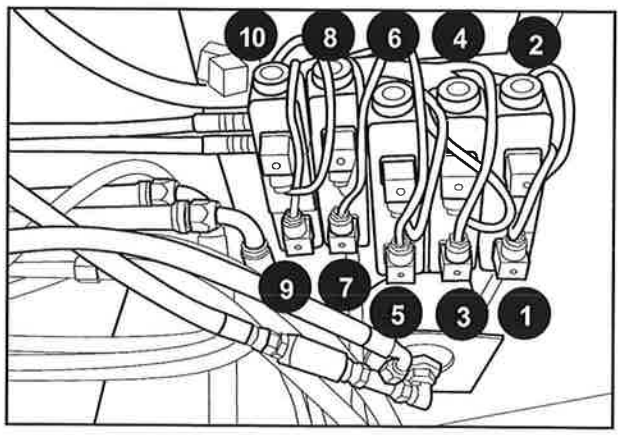

17

- **Water in Fuel Detection Sensor - SEN-001**
  Located in the chassis' right side.

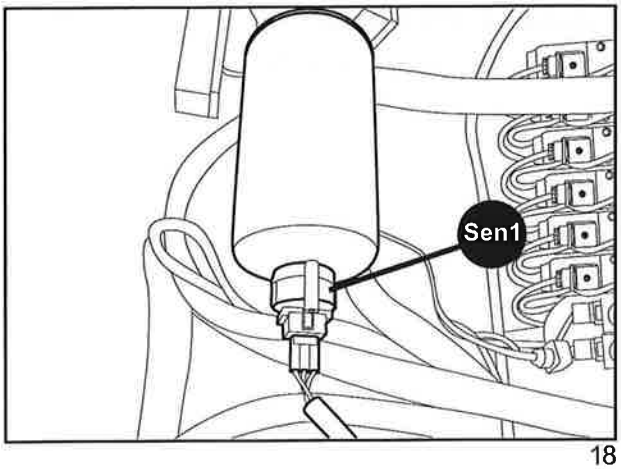

18

- **Steering Block (Only model 8000)**
  Located in the chassis's right side, under the floor.
  The access is through the battery cover.
  1 - Left-side steering valve solenoid SOL-005
  2 - Right-side steering valve solenoid SOL-006

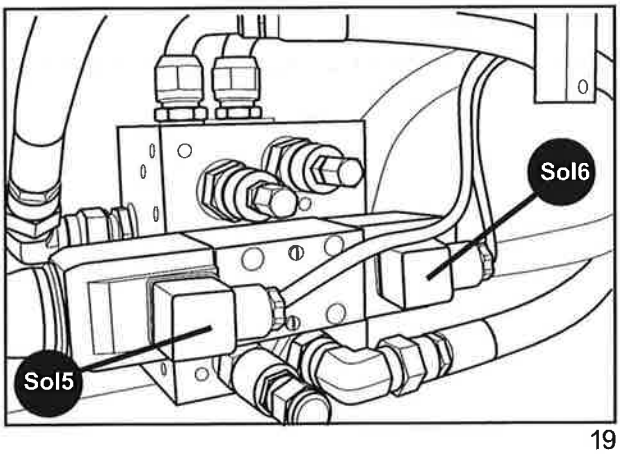

19

- **Service Door Sensor - SEN- 007**
  Located in the door and engine Compartment - chassis' right side.

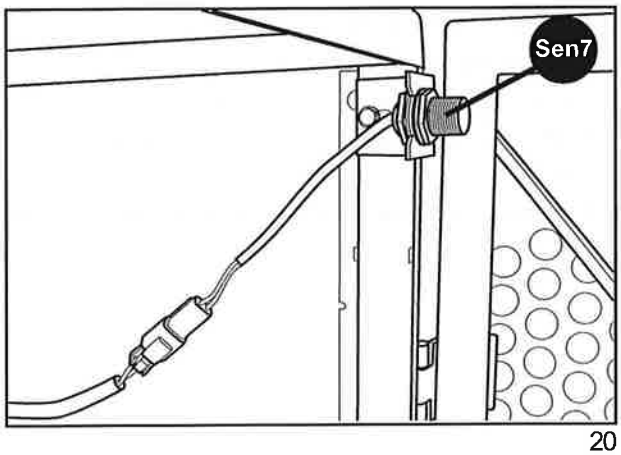

20

- **Chopper Speed Sensor - SEN-018**
  Located behind the chopper flywheel, chassis' right side.

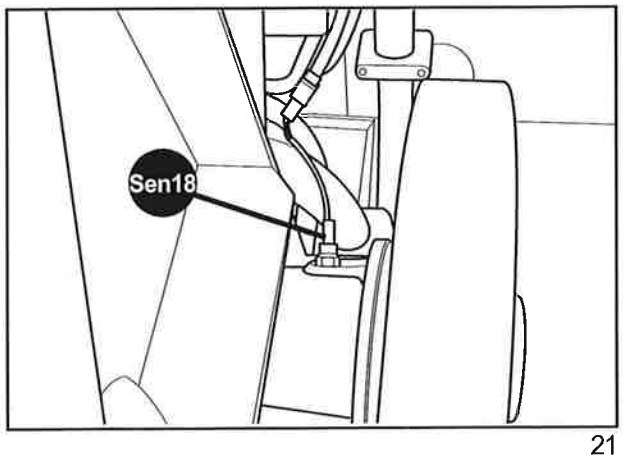

21

- **Batteries - BAT-001/002**
  Located in the chassis' right side.

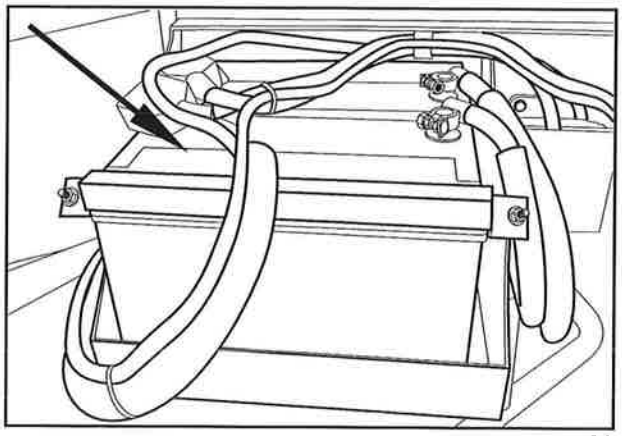

22

- **Relay 12/24V**
  Located beside the batteries – chassis' right side.

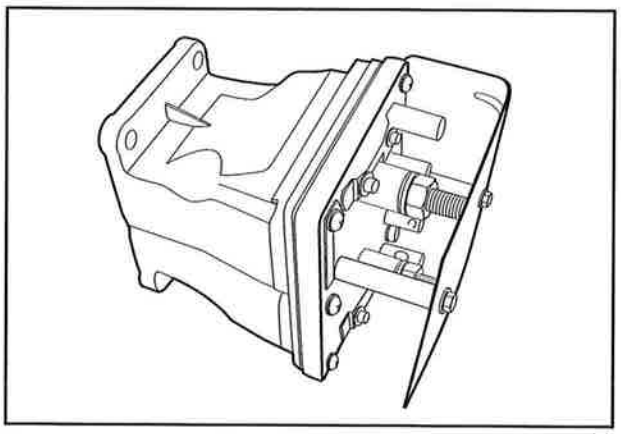

23

CHASSIS - LEFT SIDE

- **Basecutter block**
  Located in the chassis - left side.
  1 - Basecutter rotation solenoid **SOL-045** - harvest direction.
  2 - Basecutter rotation solenoid **SOL-046** - reverse direction.

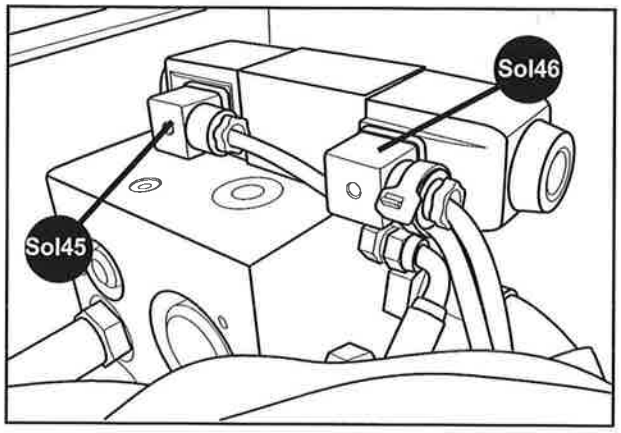

24

- **Basecutter Speed Sensor -SEN-013**
  Located behind the motor M51 - chassis' left side.

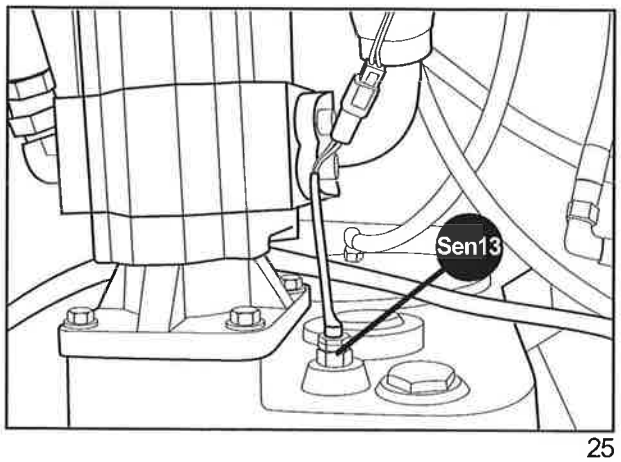

25

- **Basecutter Height Sensor -SEN-014**
  Located in the nitrogen cylinder – chassis' left side.

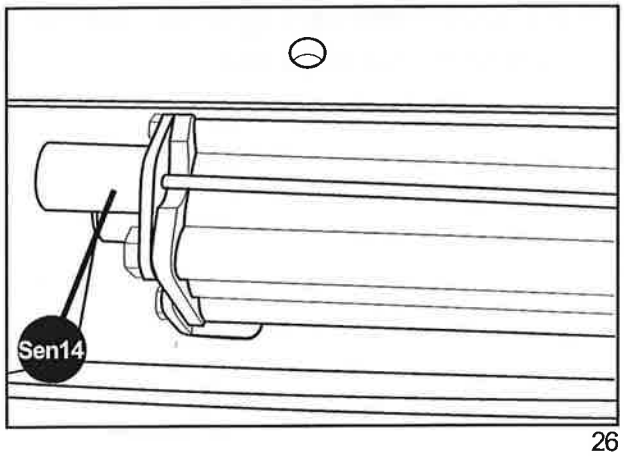

26

- **Chopper Pressure Sensor - SEN-019**
  Located in the chopper block - engine compartment's left side

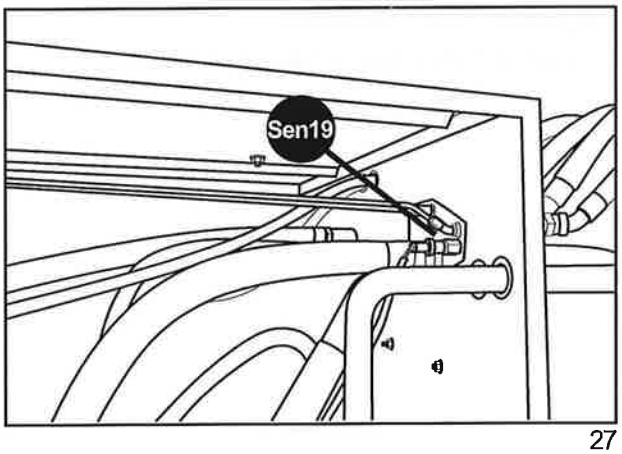

27

- **Basecutter Pressure Sensor -SEN-015**
  Located in the basecutter block – chassis' left side.

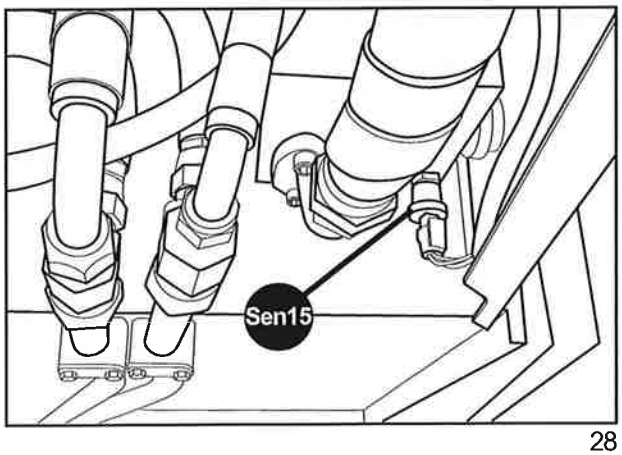

28

- **Hydraulic Oil Restrictor Vacuum Switch - SW-025**
  Located in the hydraulic oil filters head - chassis' left side.

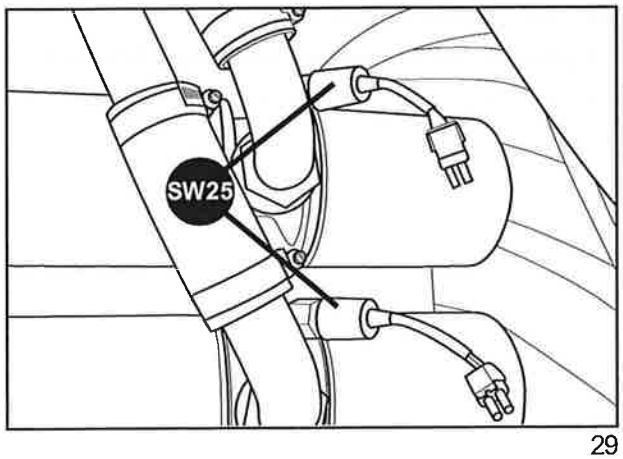

29

- **Billet Length PWM Valve Solenoid - SOL-047**
  Located in the chassis' left side.

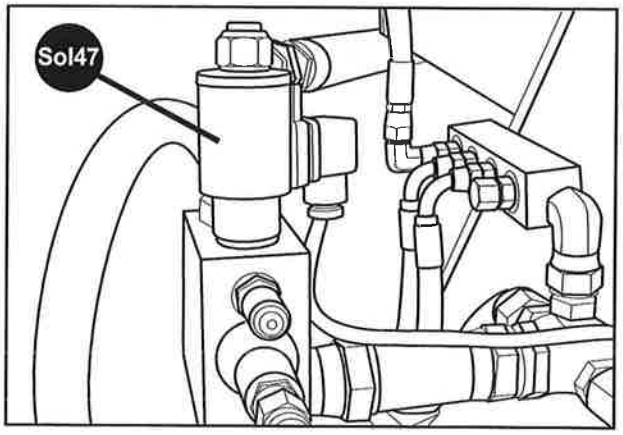

30

- **Reverse Alarm - AUD-004**
  Located in the chassis' left side.

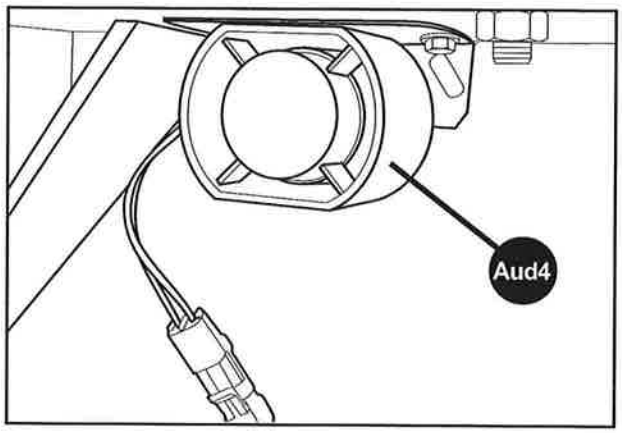

31

- **Side Trim Knife Block**
  Located in the chassis - left side.
  1 - Left side trim knife slew solenoid SOL-041 (forward)
  2 - Left side trim knife slew solenoid SOL-042 (reverse)
  3 - Right side trim knife slew solenoid SOL-043 (forward)
  4 - Right side trim knife slew solenoid SOL-044 (reverse)

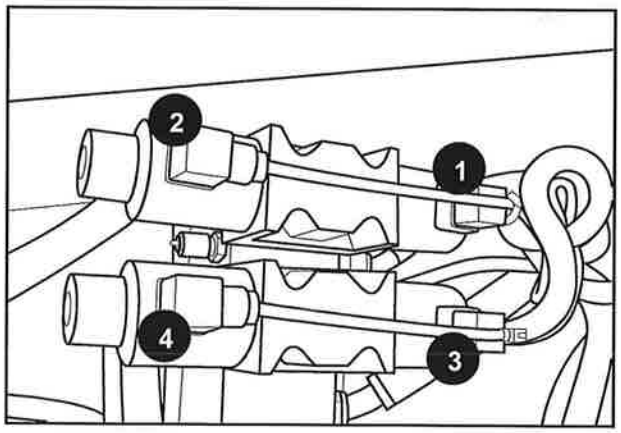

32

ENGINE COMPARTMENT

- **Hydraulic Oil Temperature Sensor -SEN-005**
  Located in the engine compartment - left side.

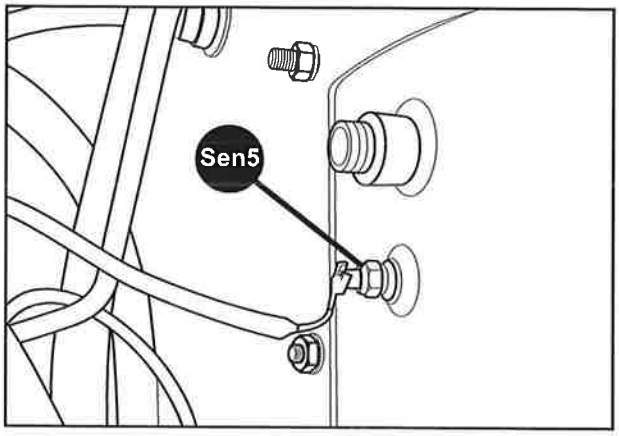

33

- **Traction Pump Solenoid - SOL-001/002 003/004**
  Located in the traction pumps, inside the engine compartment - left side.

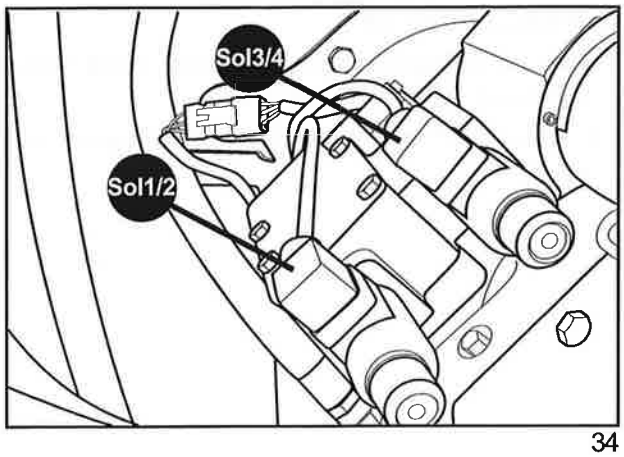

34

- **Hydraulic Oil Switch**
  Located in the hydraulic oil tank.

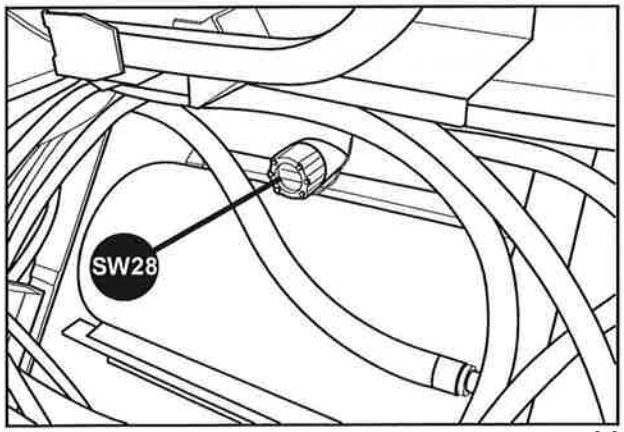

35

- **Traction Pump Position Sensor SEN-002/003**
  Located behind the pump solenoid.

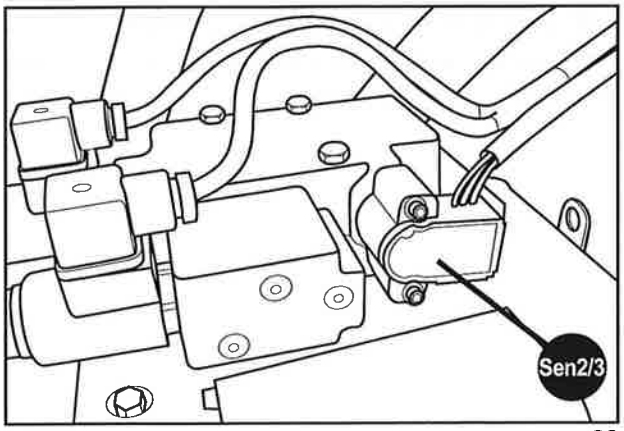

36

- **Parking Brake Solenoid - SOL-008**
  For machines 8000, the valve is located inside the engine compartment - left side (Pic. 37).

  For machines 8800, the valve is located inside the engine compartment upper side - left side.

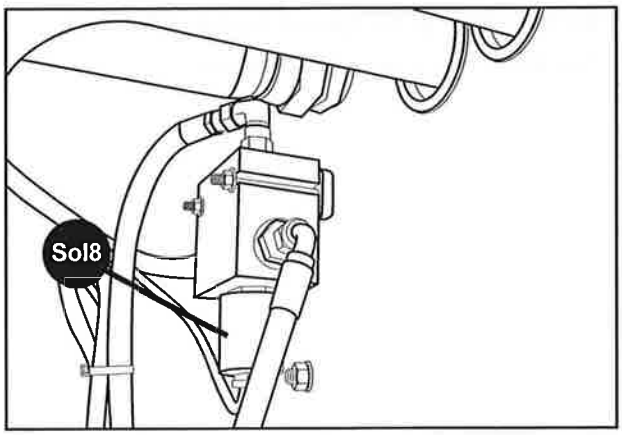

37

CHASSIS UPPER SIDE

- **Primary Extractor Speed Control PWM Valve Solenoid - SOL-013**

  Located in the primary extractor block upper side – right side

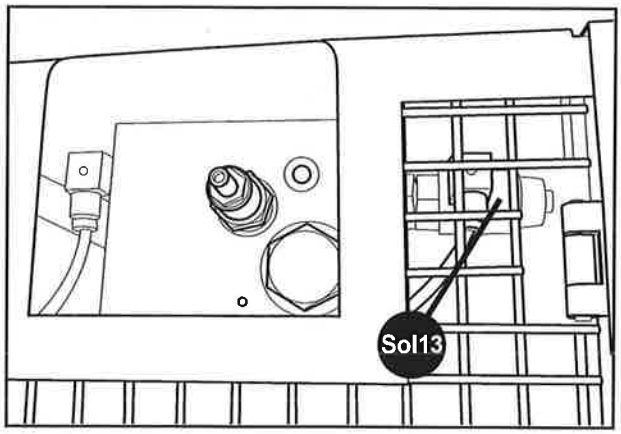

38

- **Primary Extractor ON/OFF Solenoid -SOL-012**

  Located in the primary extractor block upper side – right side

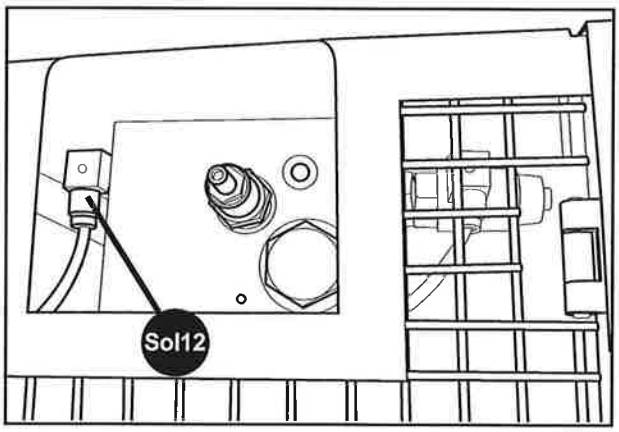

39

- **Engine Water Level Switch - SW-029**

  Located in the expansion tank, in the chassis' upper side.

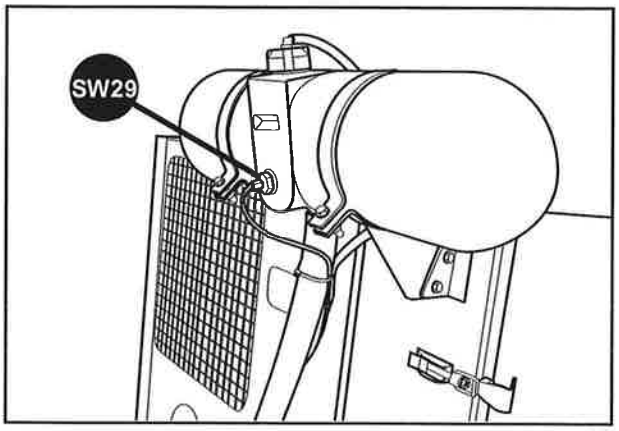

40

- **Primary Extractor Speed Sensor SEN-020**

  Located in the extractor upper side.

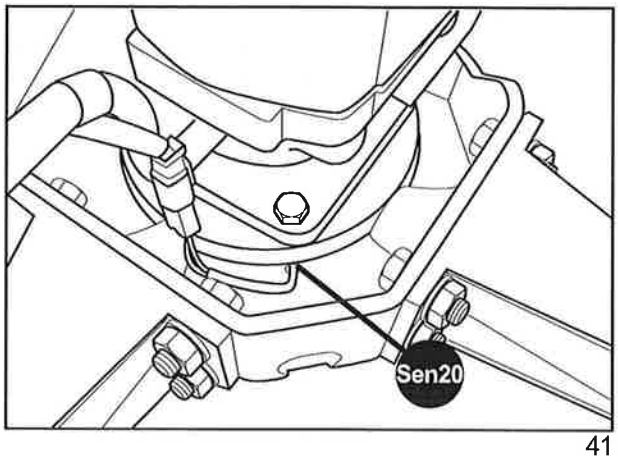

41

ELEVATOR (REAR SIDE)

- **Elevator Control**

  Located in the elevator upper side.

  1 - Elevator conveyor solenoid SOL-052 - reverse direction
  2 - Elevator conveyor solenoid SOL-051 - cutting direction
  3 - Elevator raise solenoid SOL-058
  4 - Elevator lower solenoid SOL-059
  5 - Bin flap close solenoid SOL-056
  6 - Bin flap open solenoid SOL-057
  7 - Secondary extractor clockwise slew solenoid SOL-055
  8 - Secondary extractor counterclockwise slew solenoid SOL-054
  9 - Pilot valve solenoid SOL-050
  10 - Secondary extractor valve solenoid SOL-053

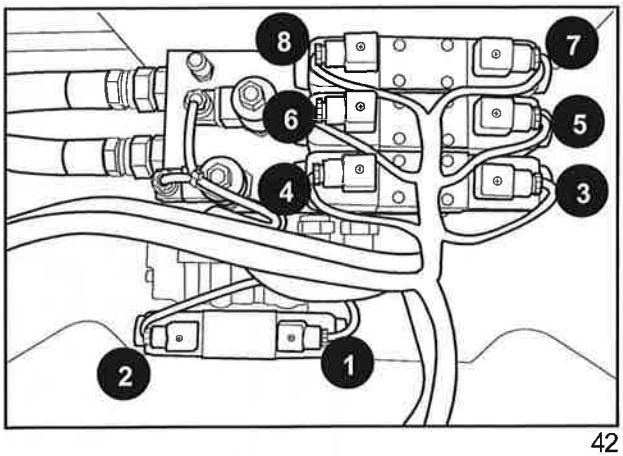

42

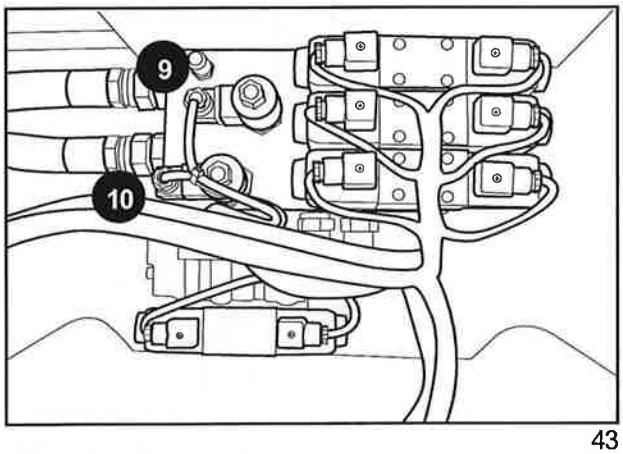

43

TOPPER (FRONT SIDE)

- **Topper Control**

  Located in the front side.

  1- Right-side topper solenoid SOL-049
  2 - Left-side topper solenoid SOL-048

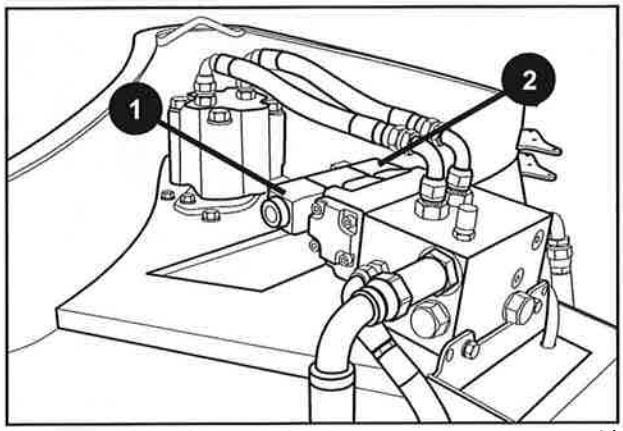

44

SCANIA ENGINE

Positions of the EMS sensors with S6 in the DC9

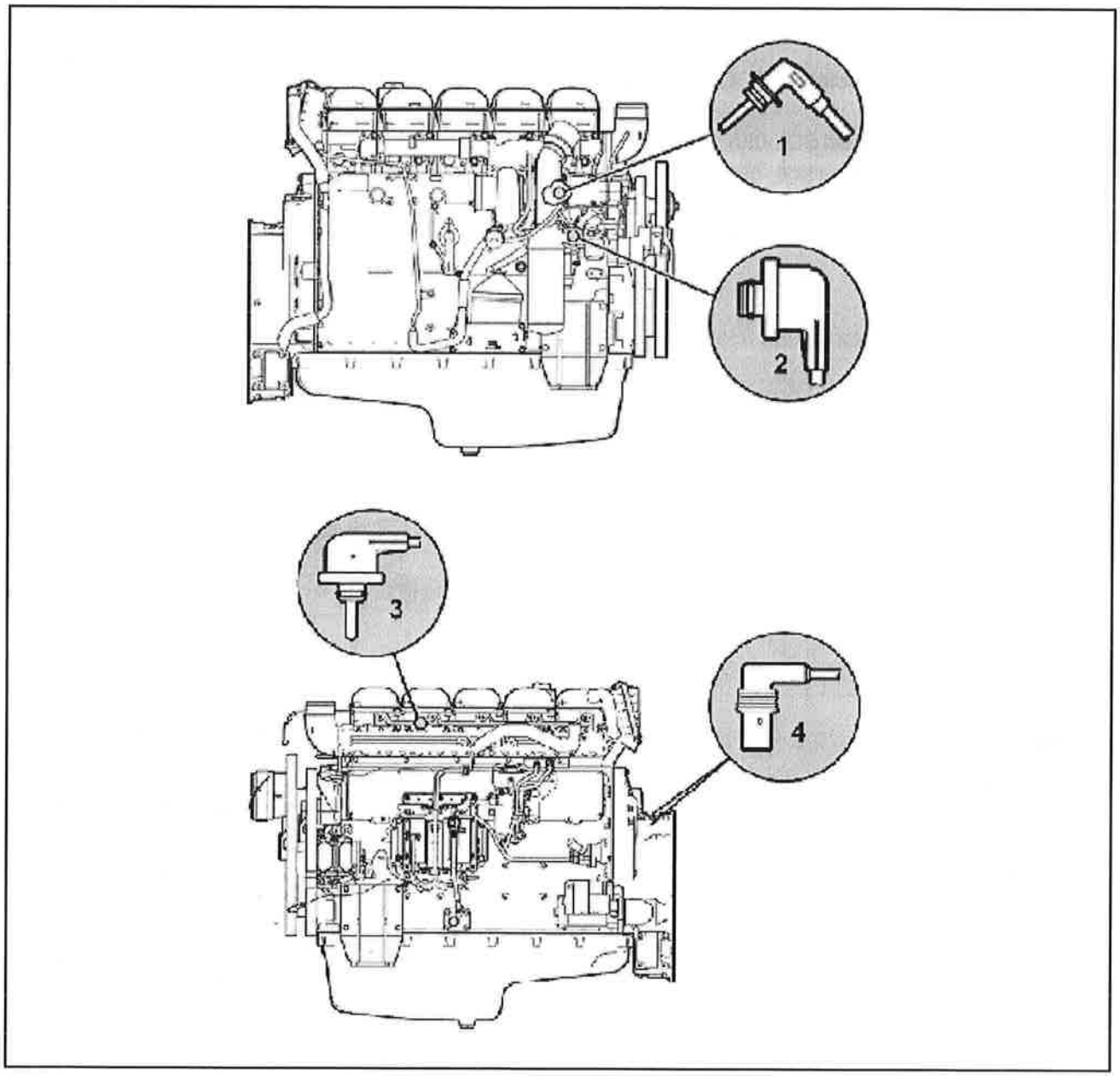

45

1 - Coolant temperature sensor

2 - Oil pressure sensor

3 - Intake air pressure and temperature sensor

4 - Engine speed sensor

5 - Coolant level monitor
(located in the expansion tank)

Components parts

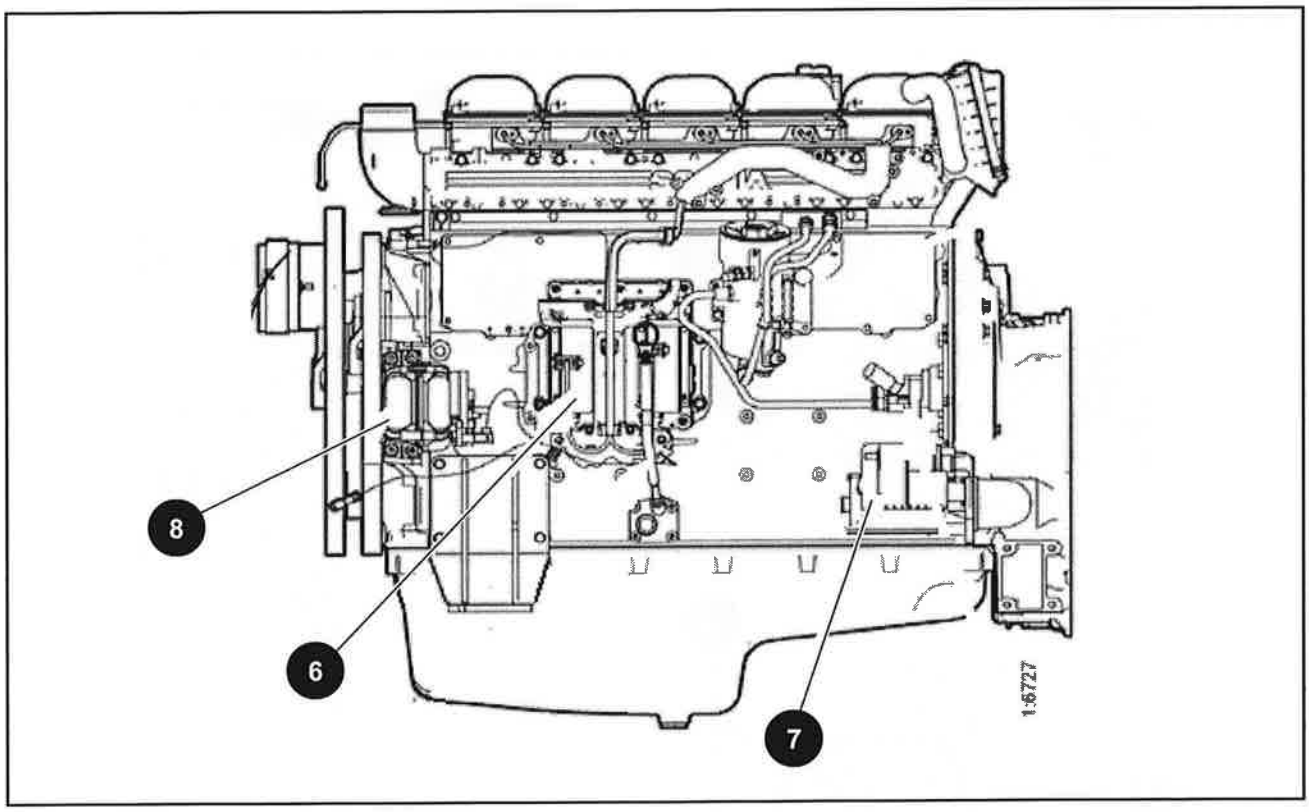

46

6 - Control unit

7 - Starter motor

8 - Alternator

9 - Air conditioning compressor

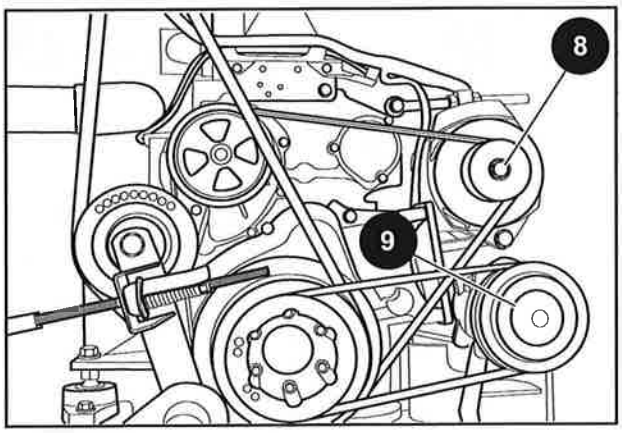

47

IVECO ENGINE CURSOR 9

Components parts

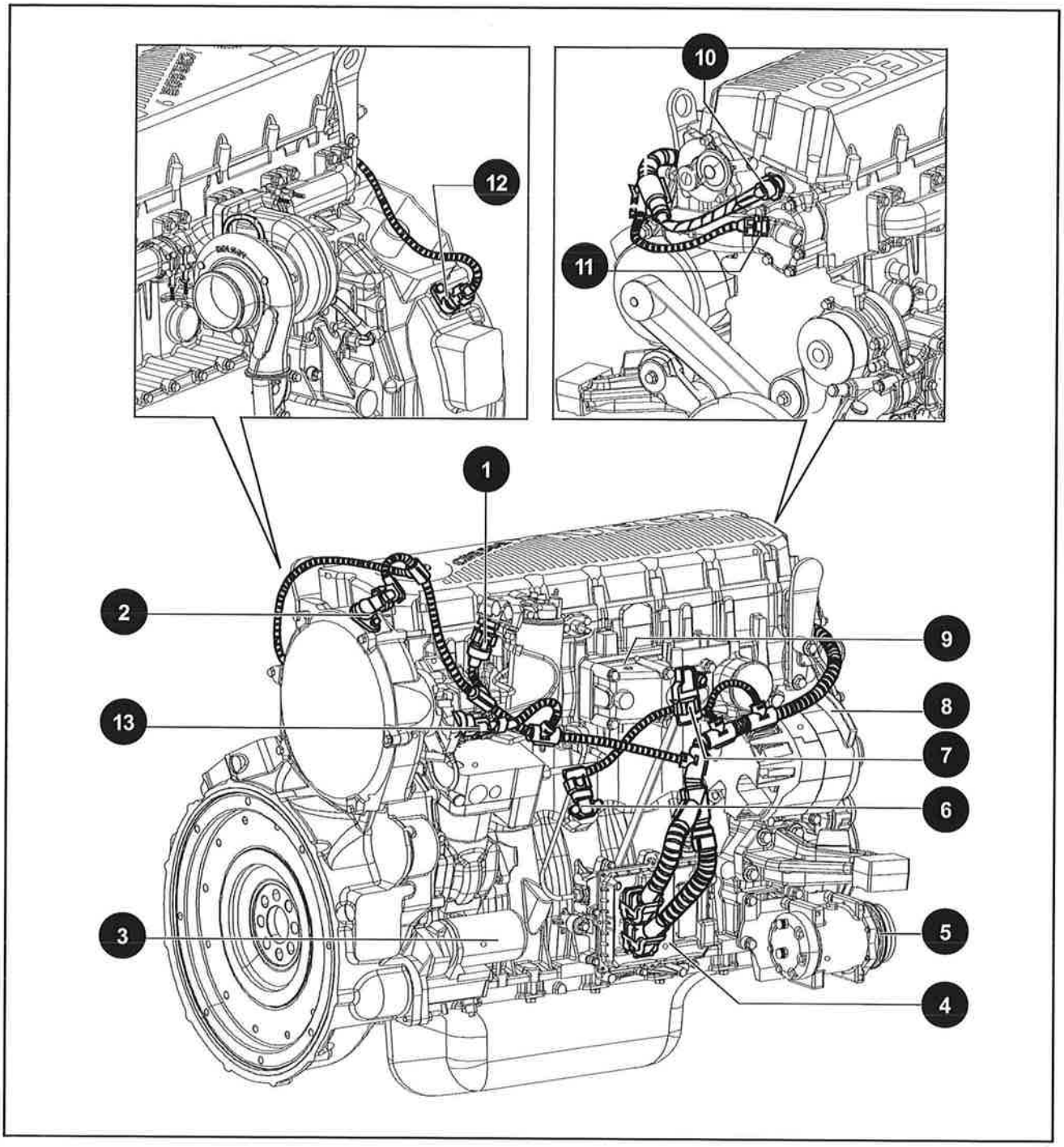

48

1 - Fuel temperature sensor
2 - Engine speed sensor in the camshaft
3 - Starter motor
4 - Control unit EDC 7
5 - Air conditioning compressor
6 - Pressure and temperature transducer
7 - Air pressure and temperature sensor
8 - Alternator
9 - Resistance for cold start up
10 - Engine block connector for connection with the electro-injectors
11 - Coolant temperature sensor
12 - Engine speed sensor in the engine flywheel
13 - Fuel dosage valve in the high-pressure pump

Engine harness

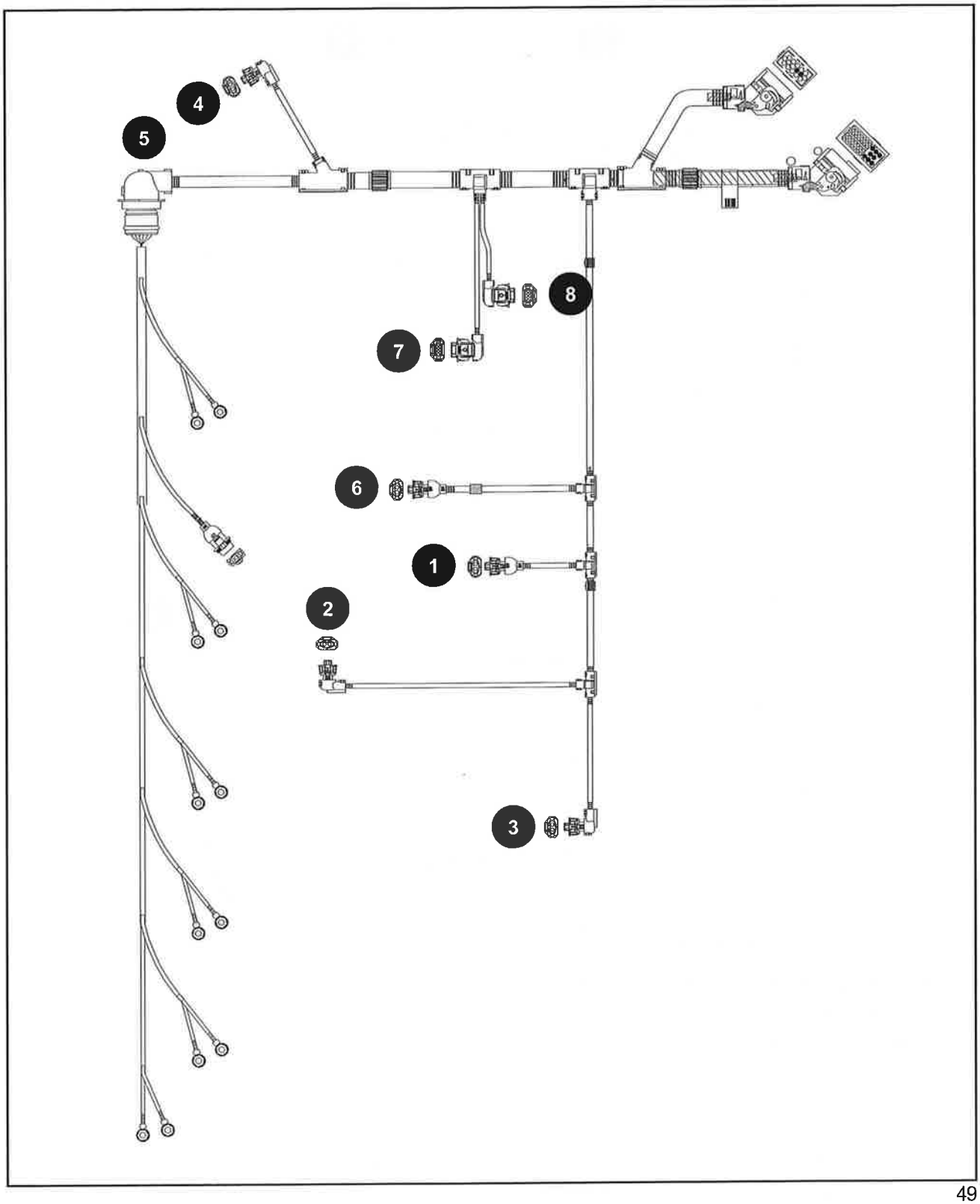

49

1 - Fuel temperature sensor
2 - Engine speed sensor in the engine flywheel
3 - Camshaft timing sensor
4 - Cylinder head inner cable passage
5 - Coolant temperature sensor
6 - High pressure pump adjuster valve
7 - Air temperature sensor
8 - Oil pressure and temperature sensor

Electronic Control Unit EDC 7 UC31

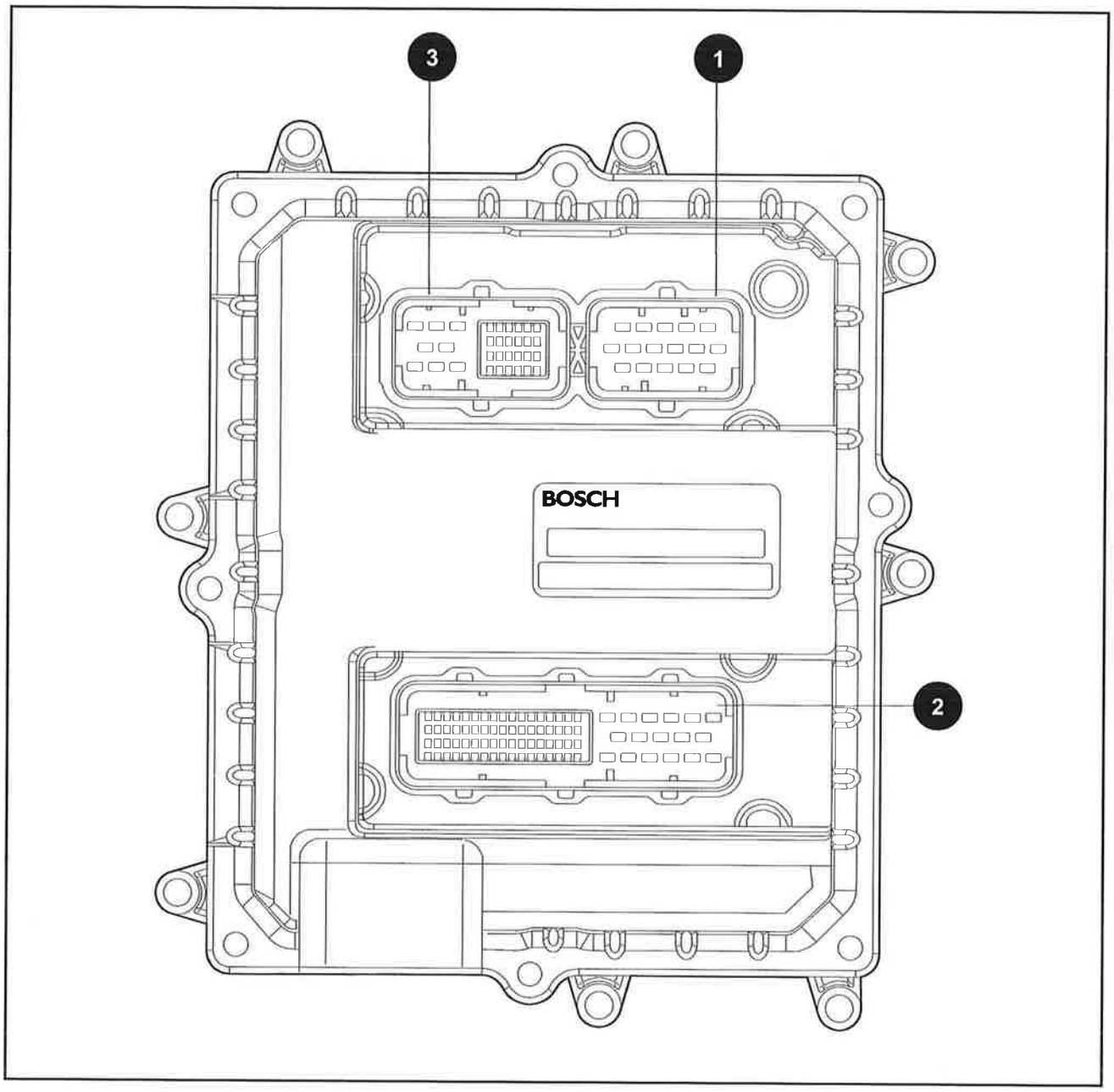

50

1 - Electro-injectors connector
2 - Chassis connector
3 - Sensors connector

Control Unit EDC OUTPUT PINS (Connector "A" of electro-injectors)

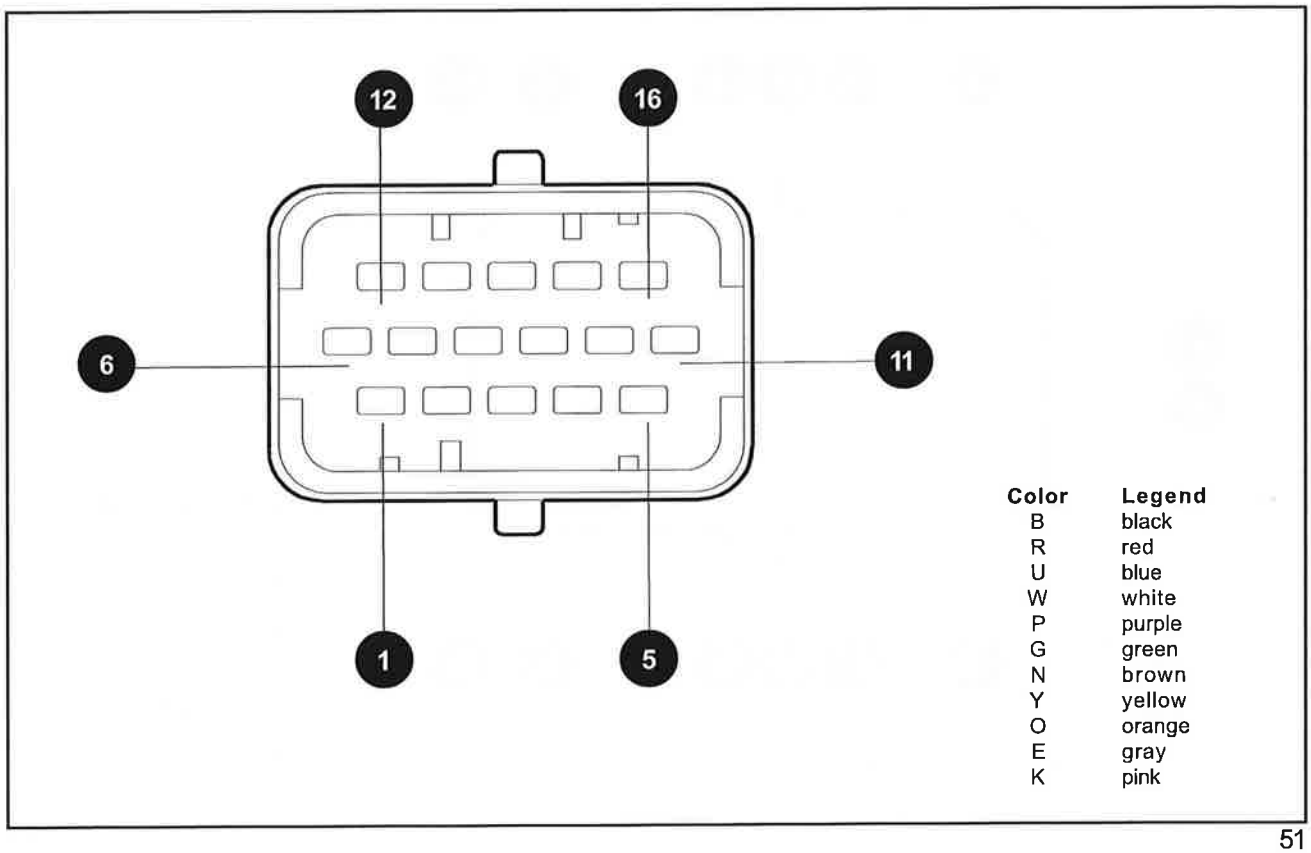

51

Pin -	Function
1 -	Solenoid valve for cylinder 5 electronic injection
2 -	Solenoid valve for cylinder 6 electronic injection
3 -	Solenoid valve for cylinder 4 electronic injection
4 -	Solenoid valve for cylinder 1 electronic injection
5 -	Solenoid valve for cylinder 3 electronic injection
6 -	Solenoid valve for cylinder 2 electronic injection
7 -	Not used
8 -	Not used

Pin -	Function
9 -	High pressure fuel pump
10 -	High pressure fuel pump
11 -	Solenoid valve for cylinder 2 electronic injection
12 -	Solenoid valve for cylinder 3 electronic injection
13 -	Solenoid valve for cylinder 1 electronic injection
14 -	Solenoid valve for cylinder 4 electronic injection
15 -	Solenoid valve for cylinder 6 electronic injection
16 -	Solenoid valve for cylinder 5 electronic injection

Control Unit EDC OUTPUT PINS (Connector "C" of sensors)

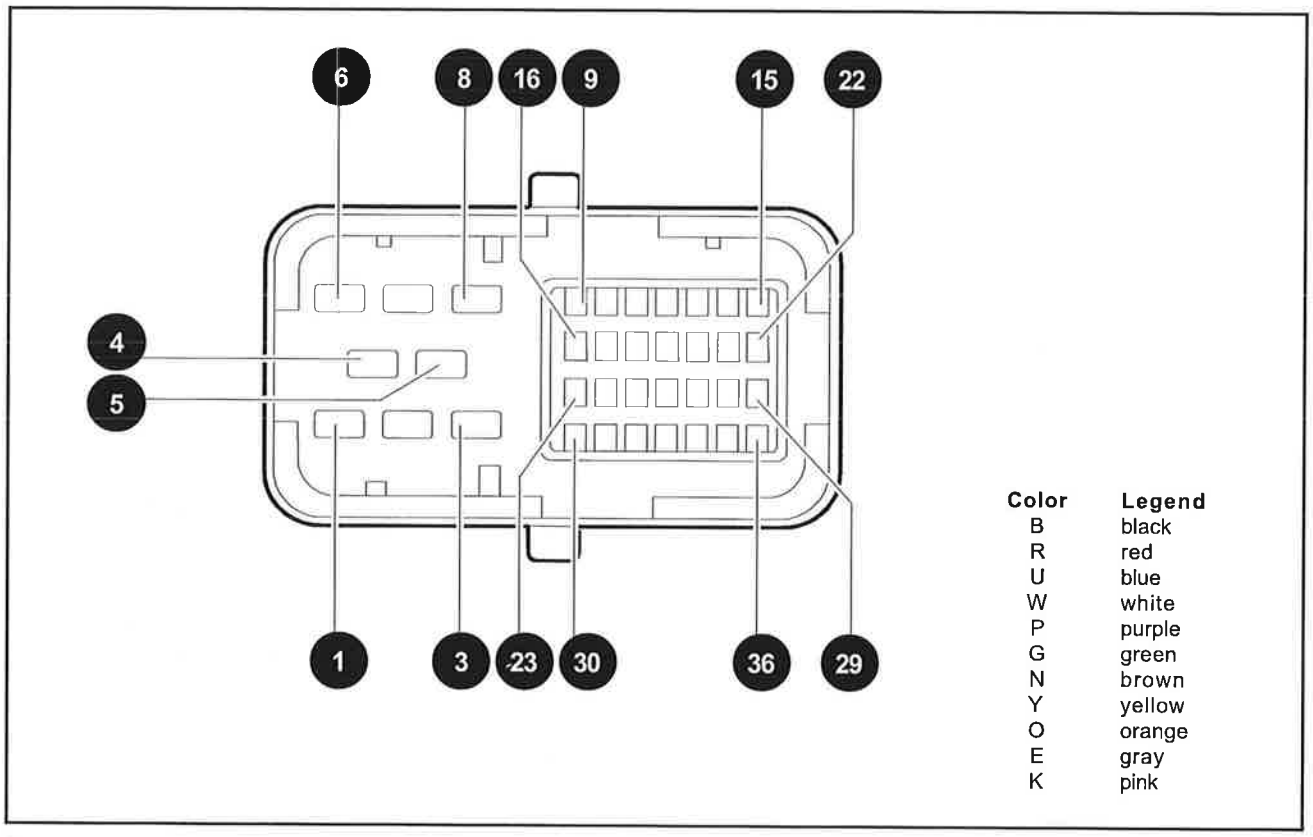

52

Pin -	Function
1-8 -	Not used
9 -	Engine speed sensor (timing)
10 -	Engine speed sensor (timing)
11 -	Not used
12 -	Pressure sensor in the gallery
13 -	Pressure sensor in the gallery
14 -	Pressure sensor in the gallery
15 -	Coolant temperature sensor
16 -	Not used
17 -	Not used
18 -	Fuel temperature sensor
19 -	Engine speed sensor (engine flywheel)
20 -	Not used
21 -	Not used
22 -	Not used
23 -	Engine speed sensor (engine flywheel)
24-	Engine oil pressure and temperature sensor

Pin -	Function
25 -	Air pressure and temperature sensor power supply
26 -	Coolant temperature sensor
27 -	Engine oil pressure and temperature sensor
28 -	Engine oil pressure and temperature sensor
29 -	Not used
30 -	Not used
31 -	Not used
32 -	Engine oil pressure and temperature sensor
33 -	Air pressure signal from the air pressure and temperature sensor
34 -	Air temperature signal from the air pressure and temperature sensor
35 -	Fuel temperature sensor
36 -	Air temperature signal from the air pressure and temperature sensor

Control Unit EDC OUTPUT PINS (Connector "B" of chassis)

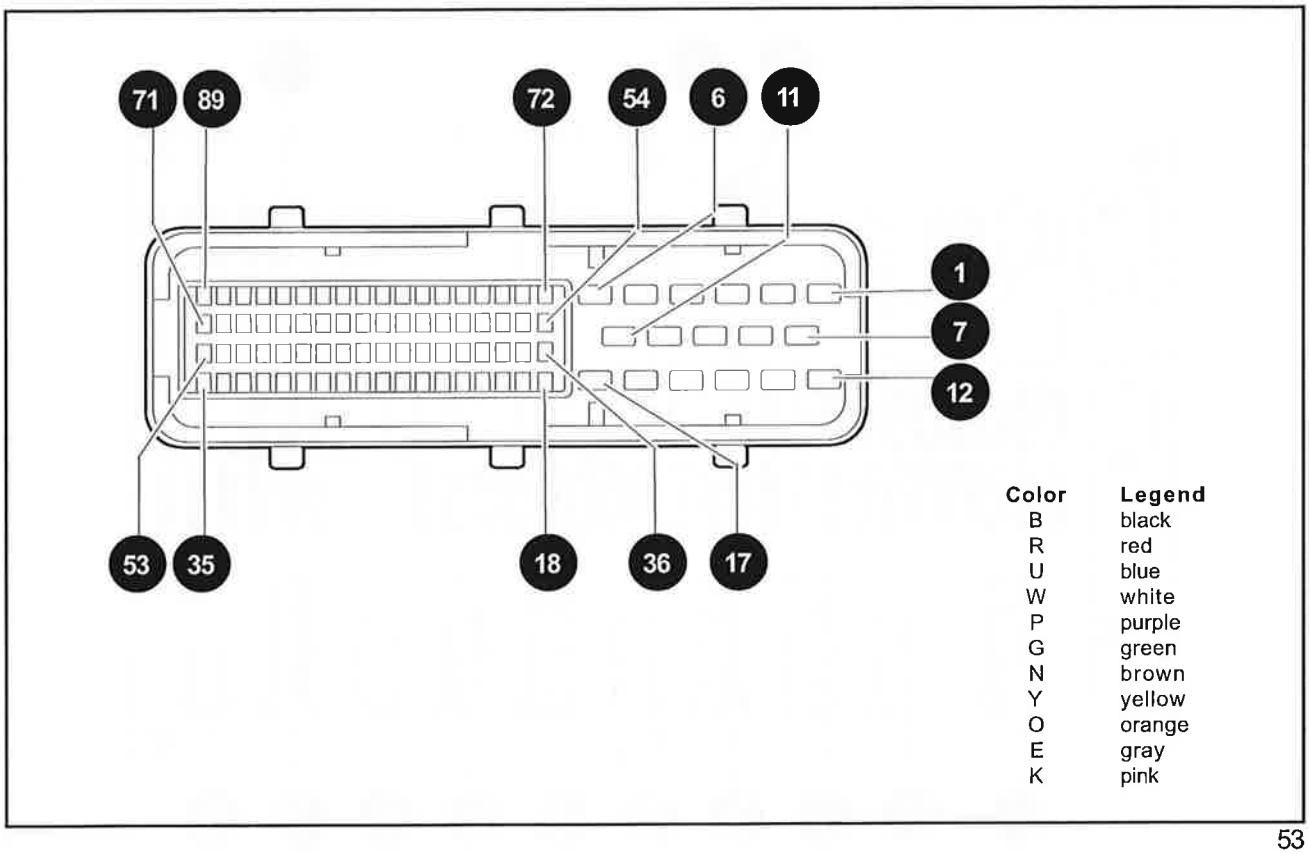

53

Pin -	Function
1 -	–
2 -	Power supply - positive (+B)
3 -	Power supply - positive (+B)
4 -	–
5 -	Power supply - negative (-B)
6 -	Power supply - negative (-B)
7 -	–
8 -	Power supply - positive (+B)
9 -	Power supply - positive (+B)
10 -	Power supply - negative (-B)
11 -	Power supply - negative (-B)
12 -	Preheating resistor control relay
13-28	–

Pin -	Function
29 -	EDC system diagnosis switch power supply (pre-disposition)
30-33	–
34 -	CAN L (ECB) Line
35 -	CAN H (ECB) Line
36-39	–
40 -	Battery positive with key ON
41 -	–
42 -	Input signal from the water in fuel presence sensor
43-74	–
75 -	Positive for the preheating resistor relay for the start up
76-8-8	–
89 -	Diagnosis line ISO "K"

Printed Circuit Board

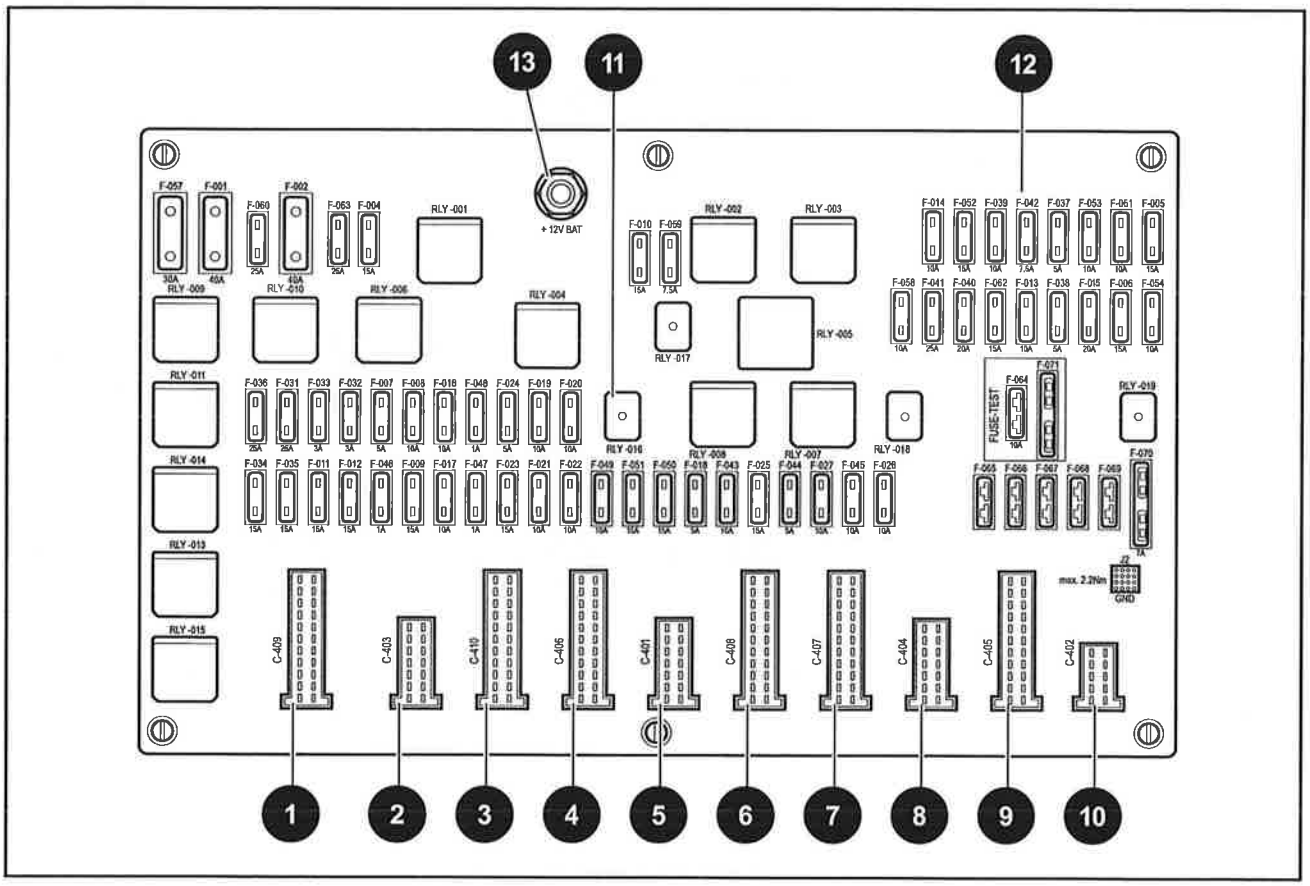

54

1. Cabin Connector C-409
2. Front Connector C-403
3. Cabin Connector C-410
4. Engine Connector C-406
5. GPS Connector C-401
6. Cabin Connector C-408
7. Cabin Connector C-407
8. Front Connector C-404
9. Engine Connector C-405
10. Auxiliary Connector C-402
11. Relays 001 to 019
12. Fuses F001 to F070
13. Power supply Battery 12V

Fuses identification

Fuses Location	Amperage	Fuses identification
F-001	40A	Service headlamps relay power supply
F-002	40A	Service headlamps relay power supply
F-003		-
F-004	15A	Stand-by
F-005	15A	Knock down roller
F-006	15A	Relay coil power supply 12V/24V
F-007	5A	Brake lamp
F-008	10A	Pilot 1 / pilot 2 valve / Topper articulation / Trailer
F-009	15A	Topper slew LH/RH
F-010	15A	Tail lamp (optional)
F-011	15A	Front transport lamp (optional)
F-012	15A	Front transport lamp (optional)

continues...

Fuses Identification (continuation)

Fuses Location	Amperage	Fuses identification
F-013	10A	Cigarette lighter
F-014	10A	Outlet 12V
F-015	20A	Wiper
F-016	10A	Basecutter up/down / Topper up/down
F-017	10A	Cropdivider right/left (up/down)
F-018	5A	Reverse alarm / Horn / Start inhibitor
F-019	10A	Key-switched power supply to radio / CD and air conditioning module
F-020	10A	Key-switched power supply for the elevator performance monitor (optional)
F-021	10A	Key-switched power supply for the wiper motor
F-022	10A	Key-switched power supply for GPS
F-023	15A	Operator's seat motor power supply
F-024	5A	Key-switched power supply for the RH console switches
F-025	15A	Side trim knife slew right/left
F-026	10A	Side trim knife right/left (extend and retract)
F-027	10A	Cropdivider tilt right/left
F-028		-
F-029		-
F-030		-
F-031	25A	Rear headlamps
F-032	3A	Front and rear headlamps (optional)
F-033	3A	Front and rear headlamps (optional)
F-034	15A	Front headlamps (external)
F-035	15A	Front headlamps (intermediate)
F-036	25A	Basecutter and Topper headlamps (optional)
F-037	5A	Ignition key
F-038	5A	Power supply of module SCM 1
F-039	10A	Giroflex / cabin's roof lamp
F-040	20A	Radio / CD and radio transmission
F-041	25A	Working headlamps
F-042	7.5A	Display / diagnosis connector / console RH
F-043	10A	Basecutter / chopper rotation Harvest and reverse direction
F-044	5A	Stand by
F-045	10A	Basecutter tilt
F-046	3A	Power supply of module SCM 1
F-047	3A	Key-switched power supply for module SCM 2
F-048	3A	Key-switched power supply for module SCM 3
F-049	10A	Biller length PWM valve / Primary extractor / Primary extractor PWM
F-050	15A	Elevator Flap up/down - Secondary extractor / Pilot block / Elevator conveyor
F-051	15A	Elevator slew left/right / Diff lock / Parking brake
F-052	15A	Turn signal indicator lamp left/right
F-053	10A	Secondary extractor hood slew left/right
F-054	10A	Primary extractor hood slew left/right
F-055		-

continues...

Fuses Identification (continuation)

Fuses Location	Amperage	Fuses identification
F-056		-
F-057	30A	Air blower 1st 2nd 3rd speed relay power supply
F-058	10A	Traction module relay power supply (maestro)
F-059	7.5A	Air conditioning compressor coil power supply
F-060	25A	Horn relay power supply
F-061	10A	Rotary bush actuator
F-062	15A	Stand by
F-063	25A	Stand by
F-064	5A	Fuses test
F-065	Empty	Spare
F-066	Empty	Spare
F-067	Empty	Spare
F-068	Empty	Spare
F-069	Empty	Spare
F-070	Empty	Spare
F-071	Empty	Fuse test
F-100	40A	Iveco Module

Relay identification

Relay	Description
RLY-001	Module SCM 1 Safety
RLY-002	Module SCM 2 Safety
RLY-003	Module SCM 3 Safety Maestro Traction Module
RLY-004	Master Relay
RLY-005	Timer Display
RLY-006	Module SCM 1 Power Supply
RLY-007	Module SCM 2 Power Supply
RLY-008	Module SCM 3 Power Supply
RLY-009	Service Headlamps Activation
RLY-010	Service Headlamps Activation
RLY-011	Hom
RLY-012	-
RLY-013	Blower 2nd Speed
RLY-014	Blower 3rd Speed
RLY-015	Blower 1st Speed
RLY-016	Rear lights (optional)
RLY-017	Conditioning Compressor
RLY-018	Maestro Traction Module Activation
RLY-019	Start Up Activation

SECTION 04 - ELECTRIC SYSTEMS

Chapter 2 - Electrical Connectors

CONTENTS

Section	Description	Page
04	Main Control Harness (87733455)	3
	Scania DC9 Engine Harness (84253504)	6
	Elevator Hoses Harness (87733447)	24
	Rear Right-Side Harness (84254471)	26
	Iveco C9 Engine Harness (84253507)	29
	Front Harness (87733453)	50
	Auxiliary Block Harness (87733456)	60
	Elevator Control Harness (87733446)	63
	Topper Harness (87733454)	65
	Rear Left-Side Harness (87733451)	66
	Traction Pump Harness (87735777)	70
	Cabin Harness (87697207)	74
	Console Harness	100
	Machine Grounding Point	106

MAIN CONTROL HARNESS (87733455)

Main control located in the chassis' right side, under the roof

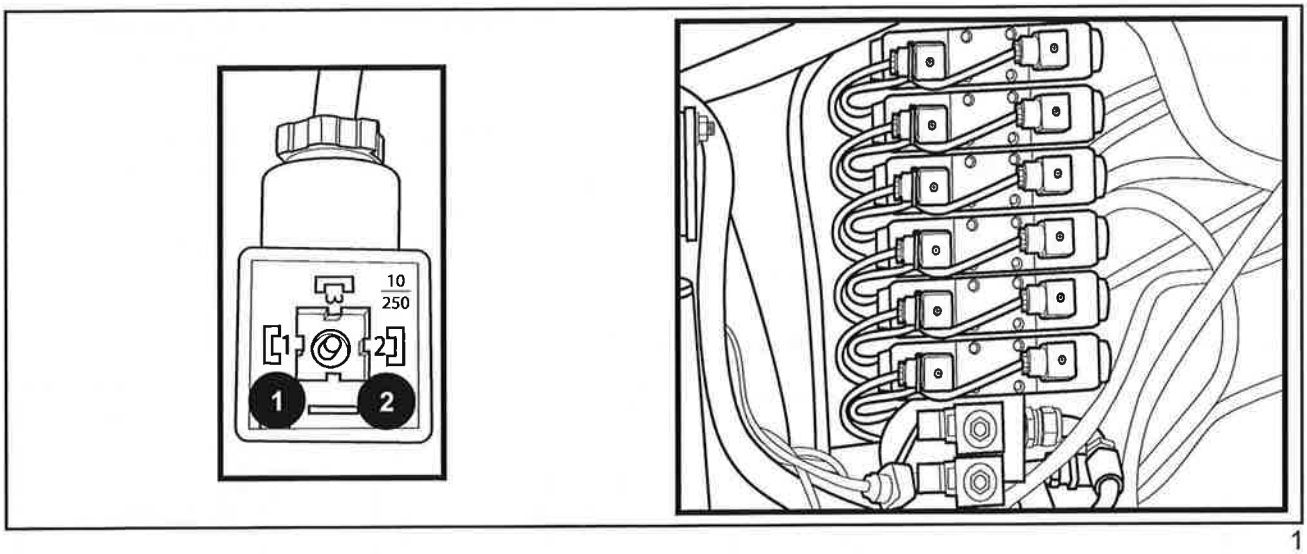

1

	CAVITY	WIRE	LINKED TO CONNECTOR
Connector C223 - Elevator left slew (SOL - 14)	1 2	9148 Black 7130 White	C287 (Ground) C006 - 25
Connector C224 - Elevator right slew (SOL - 15)	1 2	9149 Black 7131 Gray	C287 (Ground) C006 - 26
Connector C225 - Topper up (SOL - 16)	1 2	9150 Black 7132 White	C287 (Ground) C006 - 22
Connector C226 - Topper up (SOL - 17)	1 2	7133 Gray 9151 Black	C006 - 28 C287 (Ground)
Connector C227 - Cropdivider up, left side (SOL - 18)	1 2	9152 Black 7134 White	C287 (Ground) C006 - 5
Connector C228 - Cropdivider down, left side (SOL - 19)	1 2	9153 Black 7135 Gray	C287 (Ground) C006 - 6
Connector C229 - Cropdivider up, right side (SOL - 20)	1 2	9154 Black 7136 White	C287 (Ground) C006 - 7
Connector C230 - Cropdivider down, right side (SOL - 21)	1 2	9155 Black 7137 Gray	C287 (Ground) C006 - 8
Connector C231 - Basecutter up (SOL - 22)	1 2	8086 Blue 7138 White	C006 - 16 C006 - 9
Connector C232 - Basecutter down (SOL - 23)	1 2	8086 Blue 7139 Gray	C006 - 16 C006 - 10
Connector C233 - Primary extractor hood slew- left side (SOL - 24)	1 2	9156 Black 7140 White	C287 (Ground) C006 - 11
Connector C234 - Primary extractor hood slew- right side (SOL - 25)	1 2	9157 Black 7141 Gray	C287 (Ground) C006 - 12
Connector C235 - Pilot valve # 1 (SOL - 26)	1 2	9158 Black 7142 White	C287 (Ground) C006 - 13
Connector C236 - Pilot valve # 2 (SOL - 27)	1 2	9159 Black 7143 White	C287 (Ground) C006 - 14

MAIN CONTROL HARNESS (87733455) (Continued)

	CAVITY	WIRE	LINKED TO CONNECTOR
Connector C237 - Rear Trailer / Articulated Topper (SOL - 28) Optional	1 2	9160 Black 7144 White	C287 (Ground) C006 - 15
Connector C215 - Steering valve, right side (Only model 8000)	1 2	3015 Orange 7017 White	C006 - 17 C006 - 19
Connector C214 - Steering valve, left side (Only model 8000)	1 2	3015 Orange 7015 Gray	C006 - 17 C006 - 23

Angle sensor located in the steering cylinder, right side

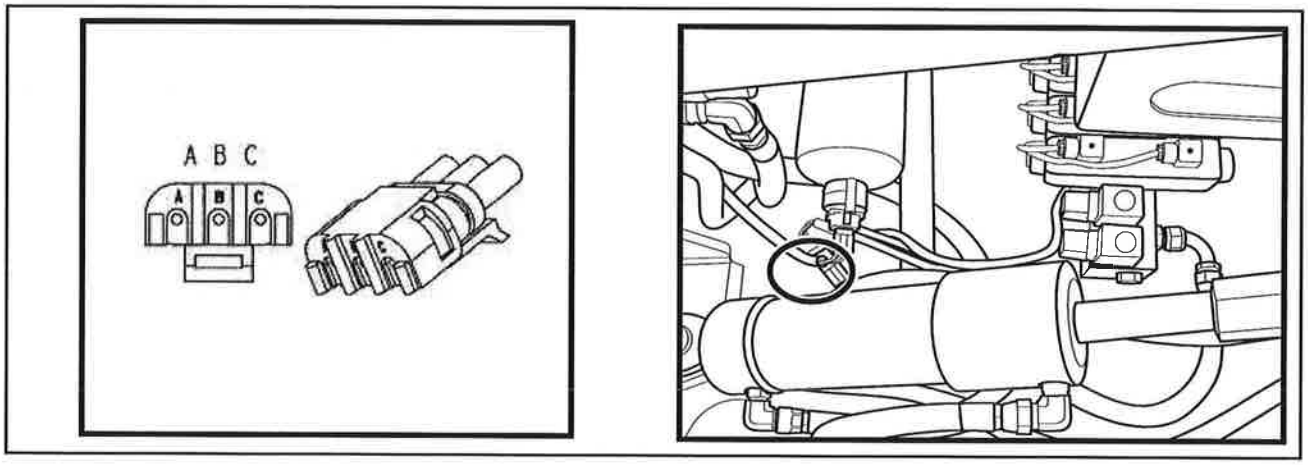

2

	CAVITY	WIRE	LINKED TO CONNECTOR
onnector C168 - Steering angle sensor (Only model 8000) (SEN - 004)	A B C	9029 Blue 8019 Yellow 3015 Orange	C006 - 21 C006 - 20 C006 - 17

Water in fuel presence sensor located in the lower side of the fuel filter - chassis' right side

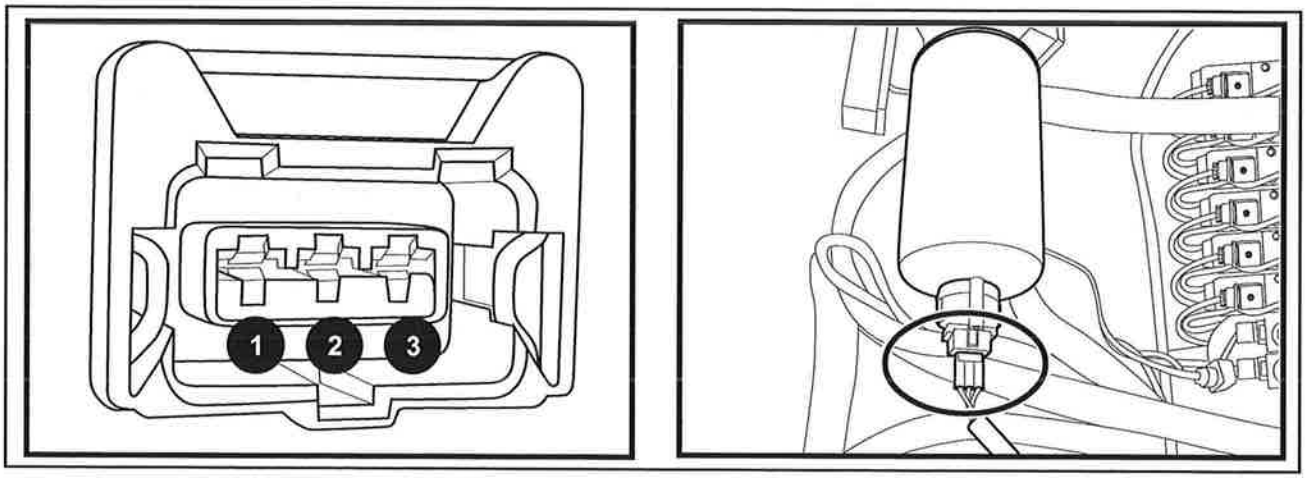

3

	CAVITY	WIRE	LINKED TO CONNECTOR
Connector C165 - Water in fuel sensor (SEN - 001)	1 2 3	8104 Yellow 9010 Black 1054 Orange	C006 - 18 C287 (Ground) C006 - 27

MAIN CONTROL HARNESS (87733455) (Continued)

Connector C006 located next to the Vickers control, right side

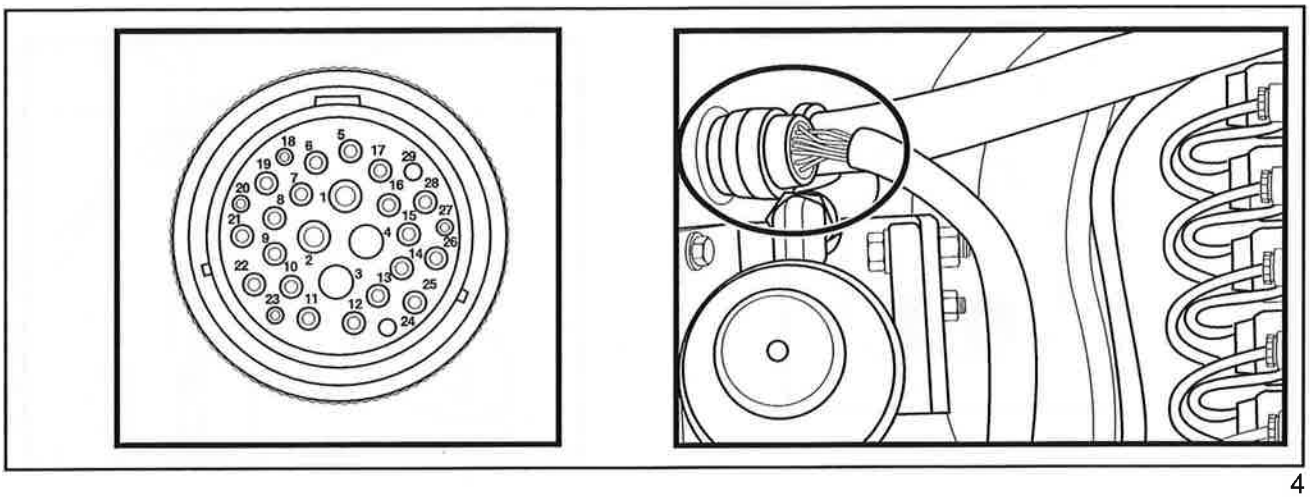

4

	CAVITY	WIRE	LINKED TO CONNECTOR
Connector C006 - DEUTSCH - Connector for the module	1	7002 White	C421 - 50 (Starter relay)
	2	7263	C420 - 50 (Starter relay)
	3		
	4		
	5	7211 White	C102 - 32 (SCM 1)
	6	7212 Gray	C102 - 19 (SCM 1)
	7	7213 White	C102 - 25 (SCM 1)
	8	7214 Gray	C102 - 30 (SCM 1)
	9	7215 White	C102 - 4 (SCM 1)
	10	7216 Gray	C102 - 5 (SCM 1)
	11	7217 White	C102 - 1 (SCM 1)
	12	7118 Gray	C102 - 21 (SCM 1)
	13	7219 White	C102 - 26 (SCM 1)
	14	7220 White	C102 - 6 (SCM 1)
	15	7221 White	C102 - 17 (SCM 1)
	16	8094 Blue	C102 - 10 (SCM1)
	17	3010 Orange	C013 - 14
	18	8000 Yellow	142 (ECU - IVECO C9 Engine)
		8000 Yellow	C102 - 32 (SCM 1 - Scania DC9 Engine)
	19	7206 White	C013 - 12
	20	8093 Yellow	C013 - 13
	21	9201 Blue	C013 - 4
	22		
	23	7205 White	C013 - 11
	24		
	25	7207 White	C202 - 5 (SCM 2)
	26	7208 Gray	C202 - 4 (SCM 2)
	27	2071 Orange	C406 - 7
	28	7210 Gray	C102 - 13 (SCM 1)

SCANIA DC9 ENGINE HARNESS (84253504)

Located in the engine compartment, right side

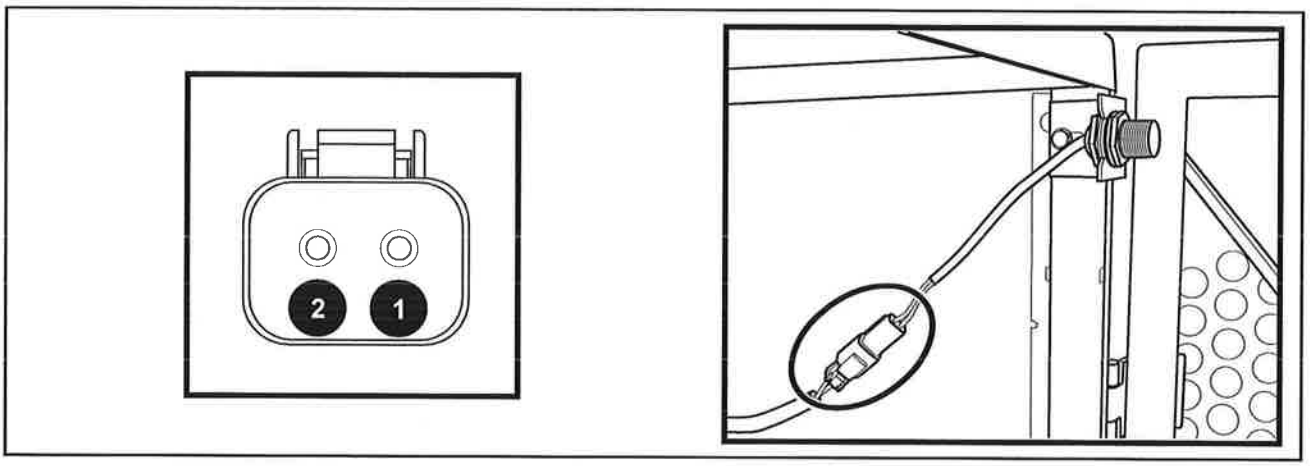

5

	CAVITY	WIRE	LINKED TO CONNECTOR
Connector C171 - Service door sensor	1 2	9114 Blue 8039 Yellow	C284-9 C203-27 (SCM 2)

Located in the expansion tank

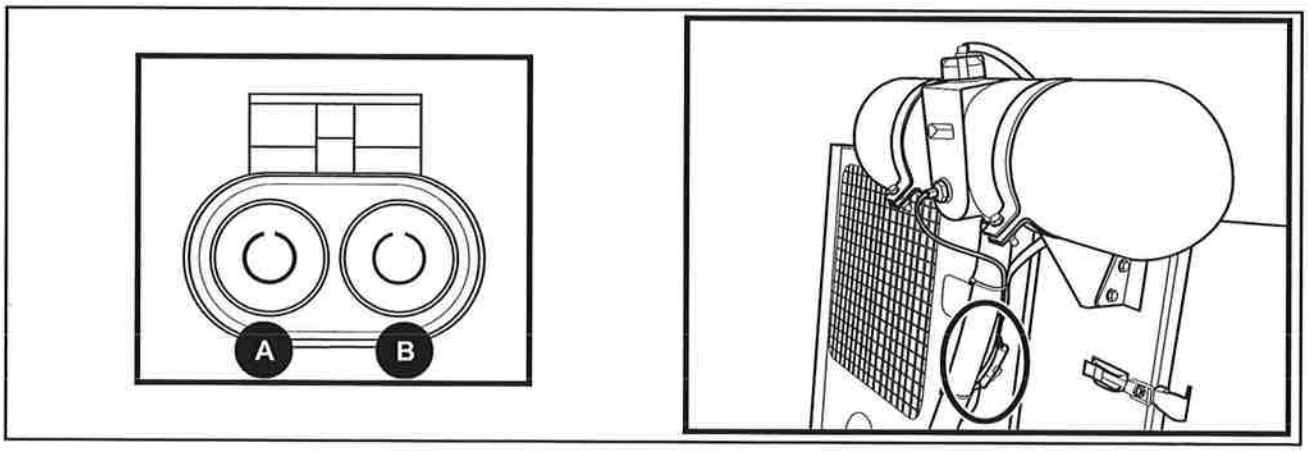

6

	CAVITY	WIRE	LINKED TO CONNECTOR
Connector C067 - Water level switch	A B	2036 Pink 8053 Yellow	C406-14 C406-1

SCANIA DC9 ENGINE HARNESS (84253504) (Continued)

Location together with the air conditioning compressor

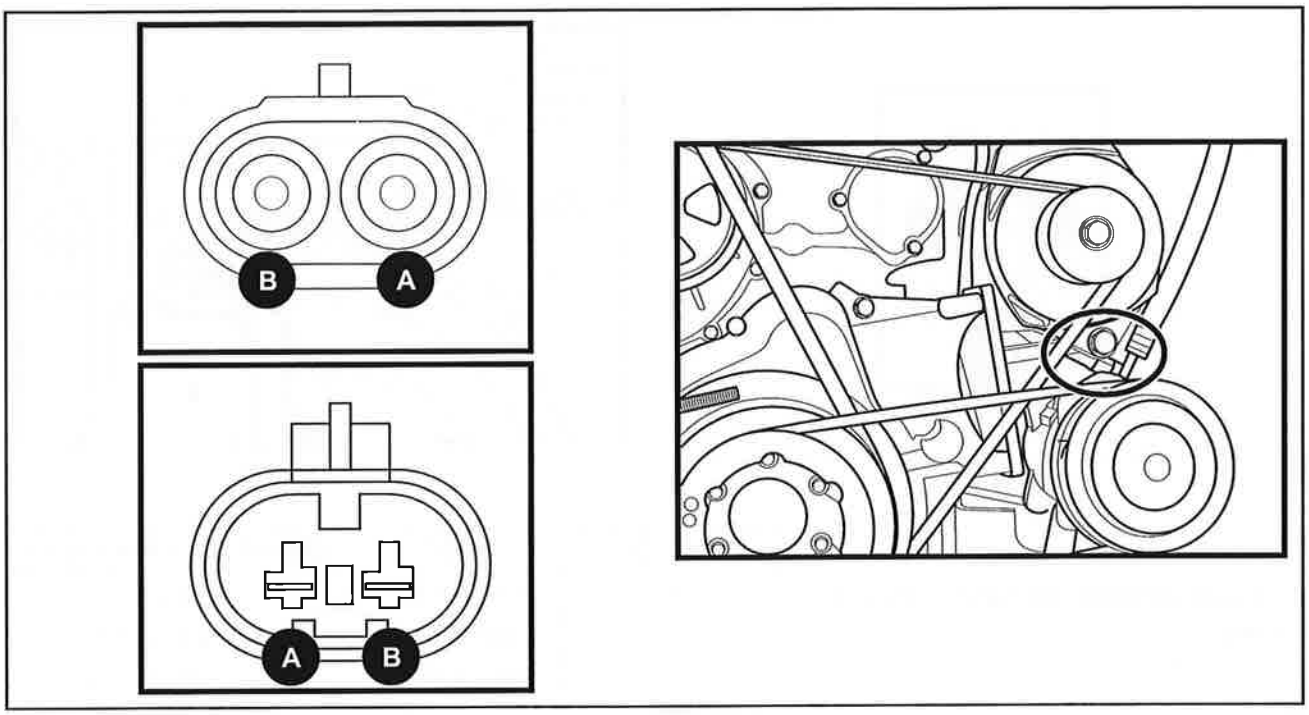

7

	CAVITY	WIRE	LINKED TO CONNECTOR
Connector C049 - Air conditioning low pressure switch	1 2	7247 White 7051 White	C050-1 C216-A
Connector C050 - Air conditioning high pressure switch	1 2	7247 White 7246 White	C049-1 C406-18

Location together with the air conditioning compressor

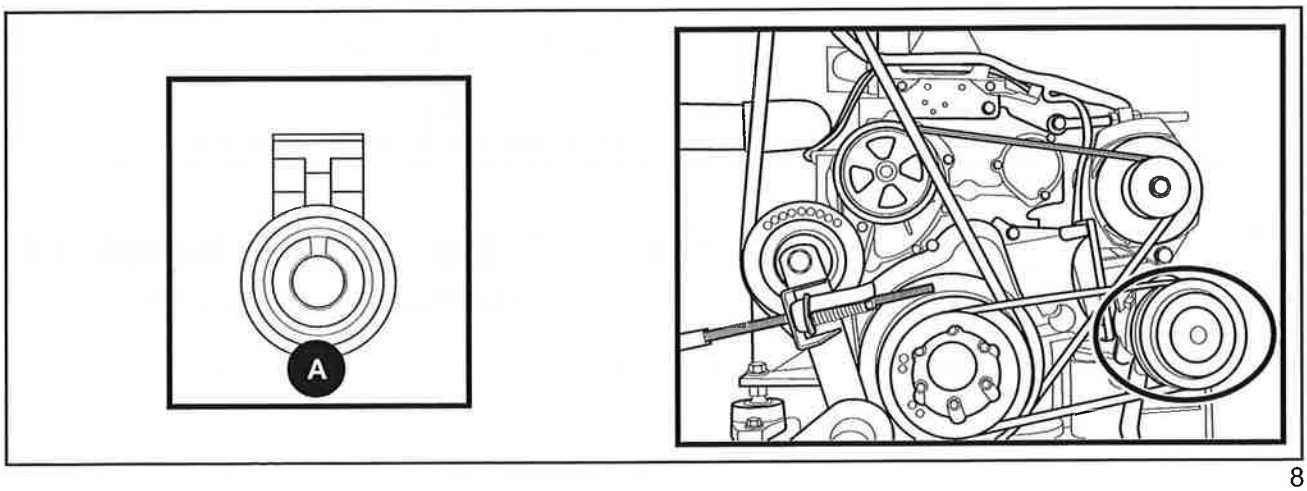

8

	CAVITY	WIRE	LINKED TO CONNECTOR
Connector C216 - Air conditioning compressor coil solenoid	A	7051 White	C049-2

SCANIA DC9 ENGINE HARNESS (84253504) (Continued)

Located in the chopper block

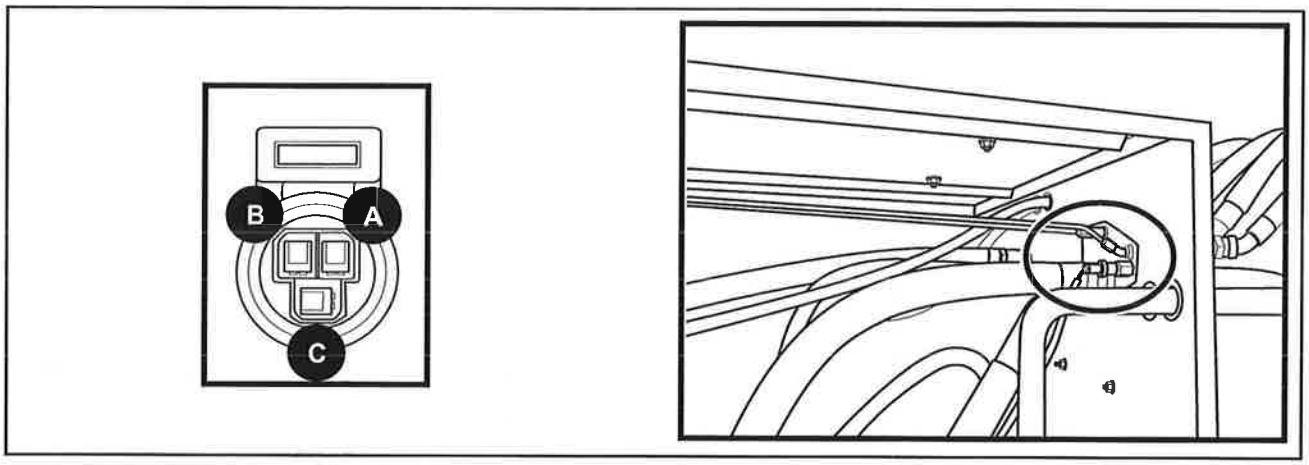

9

	CAVITY	WIRE	LINKED TO CONNECTOR
Connector C183 - Chopper pressure sensor	A B C	9138 Blue 2049 Pink 8069 Yellow	C284-5 C202-14 (SCM 2) C202-8 (SCM 2)

Located in the engine compartmen, right side

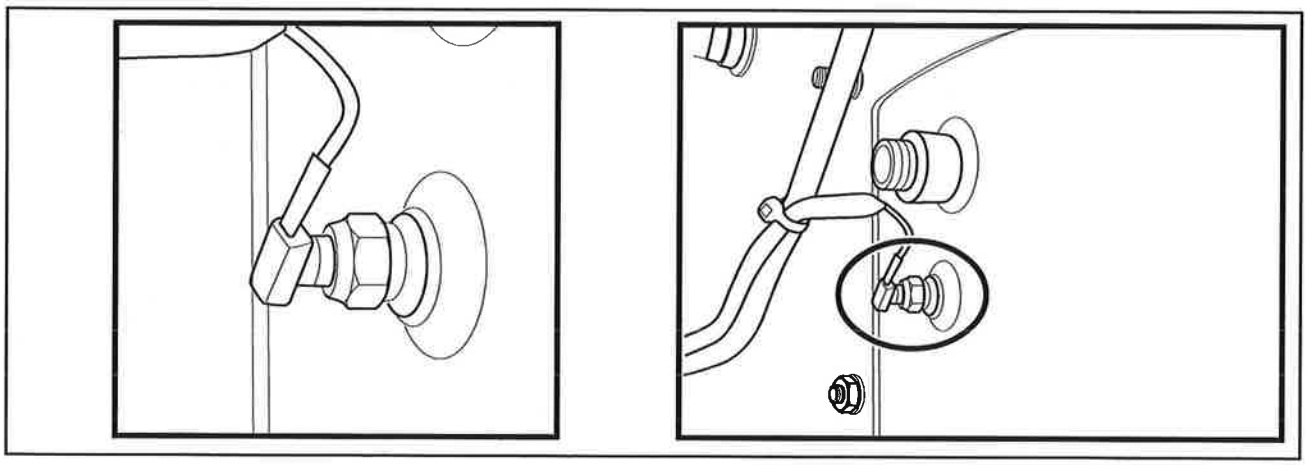

10

	CAVITY	WIRE	LINKED TO CONNECTOR
Connector C169 - Hydraulic oil temperature sensor	1	8044 Yellow	C202-23 (SCM 2)

SCANIA DC9 ENGINE HARNESS (84253504) (Continued)

Located in the valve, inside the engine compartmen

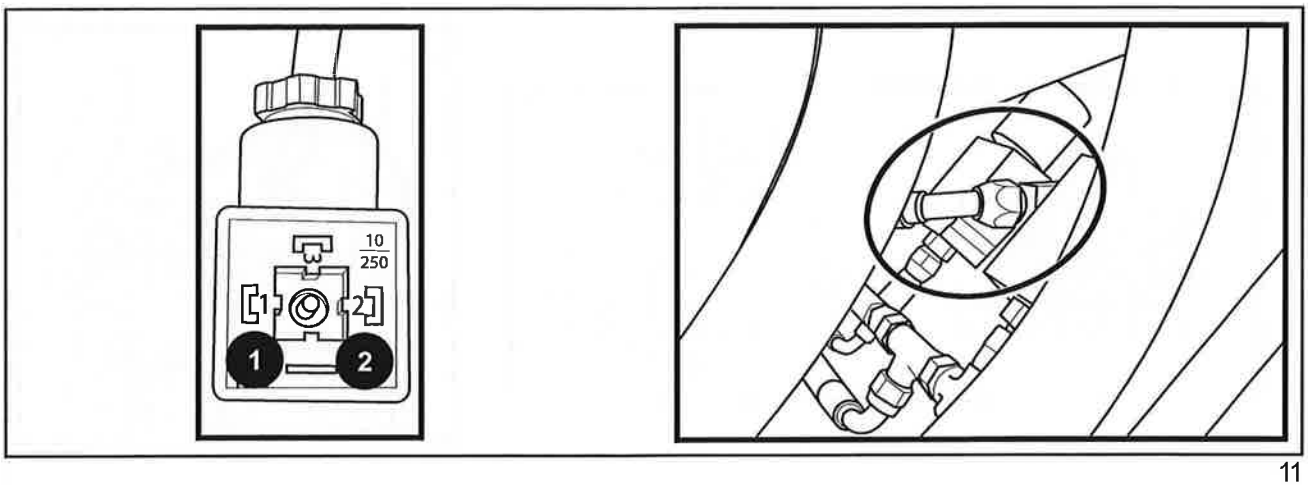

11

	CAVITY	WIRE	LINKED TO CONNECTOR
C217 - Parking brake valve	1	9110 Black	C284-1 (Ground)
	2	7121 White	C202-15 (SCM 2)

Located in the engine ECU

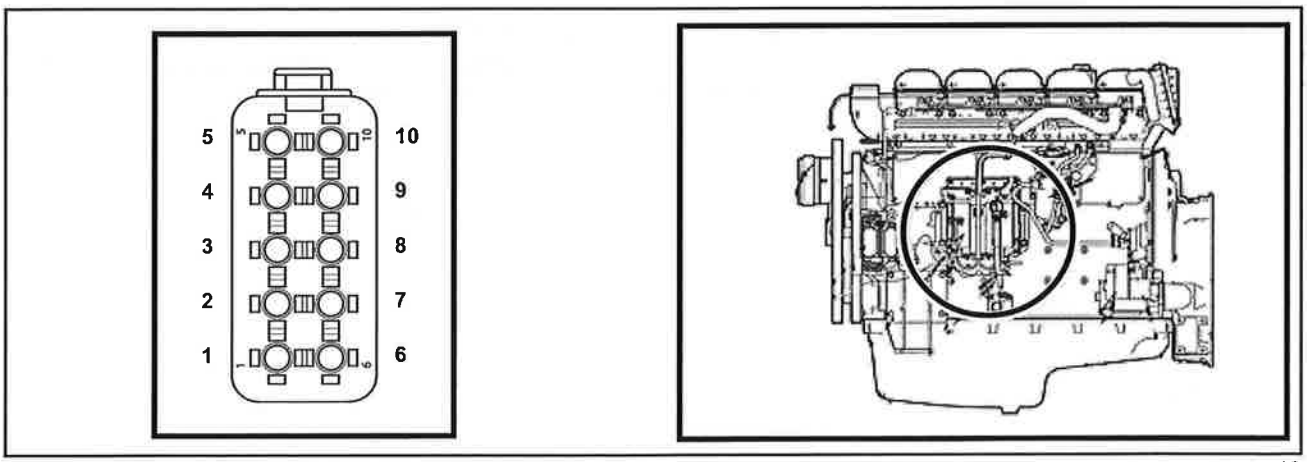

12

	CAVITY	WIRE	LINKED TO CONNECTOR
Connector C415 - SCANIA - Electronic Control Unit (ECU)	1	1057 Red	C416-B
	2	9234 Blue	C417-D
	3	2072 Orange	C417-F
	6	1058 Red	C417-G
	7	9233 Blue	C417-C and C417-D
	9	4028	C406-12
	10	4029	C406-4

SCANIA DC9 ENGINE HARNESS (84253504) (Continued)

Located together with the operator's right side modules

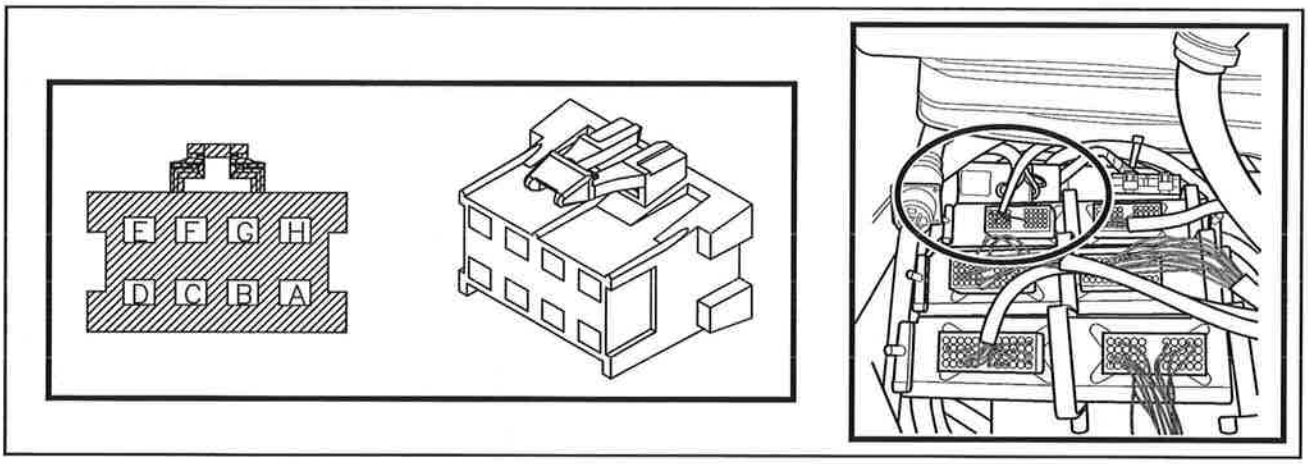

13

	CAVITY	WIRE	LINKED TO CONNECTOR
Connector C417 - Converter 12 V to 24 V	A	9231 Black	GND-001 (Ground)
	B		
	C	9232 Blue	C415-7
	D	9235 Blue	C415-2
	E	2071 Orange	C406-7
	F	2072 Pink	C415-3
	G	1056 Red	C415-1
	H	1055 Red	J1 Printed circuit board

SCANIA DC9 ENGINE HARNESS (84253504) (Continued)

Located in the engine compartment rear side, right side

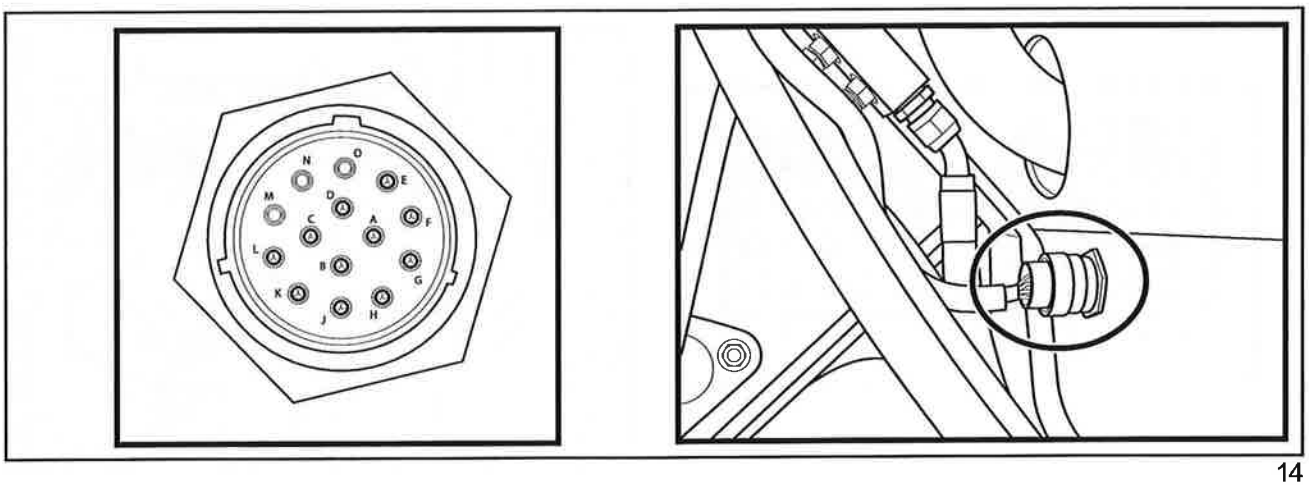

14

	CAVITY	WIRE	LINKED TO CONNECTOR
Connector C008 - Rear connector, right side	A	8095 Yellow	C284-24
	B	7222 White	C202-17 (SCM 2)
	D	7223 White	C202-26(SCM 2)
	E	8097 Yellow	C202-29 (SCM 2)
	F	8098 Yellow	C202-35 (SCM 2)
	J	9207 Black	C284-4
	K	9205 Blue	C284-2
	L	8096 Blue	C202-10 (SCM 2)

SCANIA DC9 ENGINE HARNESS (84253504) (Continued)

Located in the operator's seat, right side

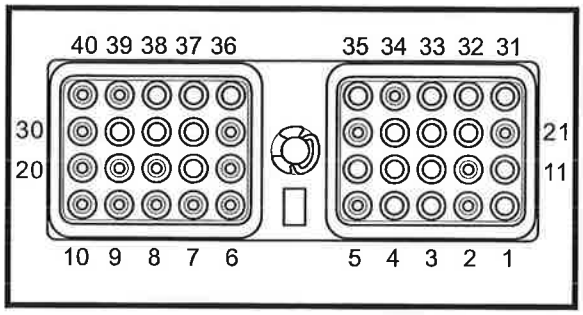

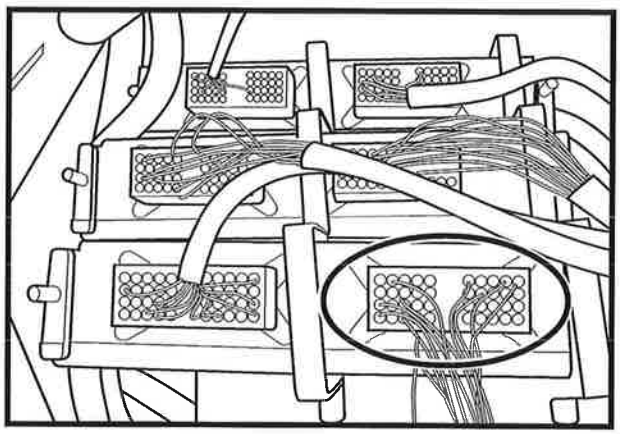

15

	CAVITY	WIRE	LINKED TO CONNECTOR
Connector C102 - Module SCM 1 concector 2	1	7217 White	C102-1
	2	1024 Red	C102-2
	3	3022 Orange	C102-3
	4	7215 White	C102-4
	5	7216 Gray	C102-5
	6	7220 White	C102-6
	9	3020 Orange	C102-9
	10	8094 Blue	C006-16
	11	9037 Black	C102-11
	12	9012 Black	C281-6
	13	7210 Gray	C102-13
	15	7209 White	C102-15
	17	7221 White	C102-17
	19	7212 Gray	C102-19
	21	7218 Gray	C102-21
	25	7213 White	C102-25
	26	7219 White	C102-26
	30	7214 Gray	C102-30
	31	9013 Black	C281-11
	32	9014 Black	C281-1
	36	8000 Yellow	C006-18
	37	7211 White	C102-37

SCANIA DC9 ENGINE HARNESS (84253504) (Continued)

Located in the operator's seat, right side

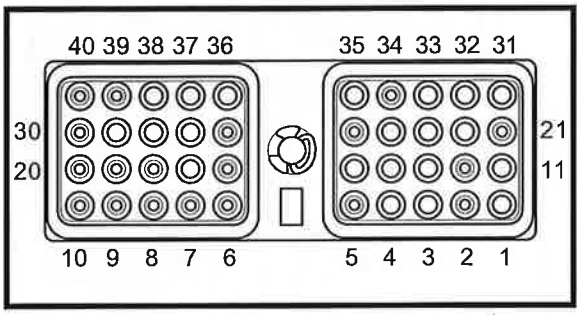

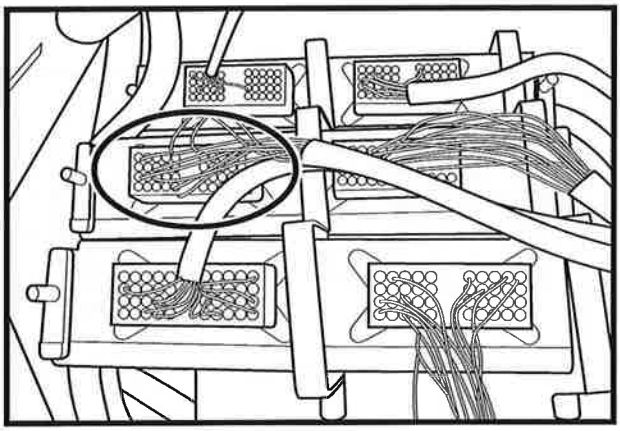

16

	CAVITY	WIRE	LINKED TO CONNECTOR
Connector C203 - Module SCM 2 connector 3	1	7235 Gray	C010-10
	2	7229 White	C010-4
	3	7236 White	C010-1
	4	7232 White	C010-7
	5	7233 Gray	C010-8
	6	7230 White	C010-5
	7	1028 Red	C405-22
	8	7231 Gray	C010-6
	9	9042 Black	C281 (Ground)
	10	9043 Black	C281 (Ground)
	12	9020 Black	C281 (Ground)
	13	8063 Yellow	C405-14
	16	9040 Black	C281 (Ground)
	18	8099 Yellow	C010-11
	19	7030 White	C405-15
	20	7031 White	C405-15
	21	7234 White	C010-9
	24	7227 White	C010-2
	25	7228 Gray	C010-3
	26	3026 Orange	C406-16
	27	8039 Yellow	C171-2
	29	1031 Red	C203-29
	30	1032 Red	C203-30
	39	7034 Gray	C405-19
	40	7035 Gray	C405-19

SCANIA DC9 ENGINE HARNESS (84253504) (Continued)

Module located in the operator's seat, right side

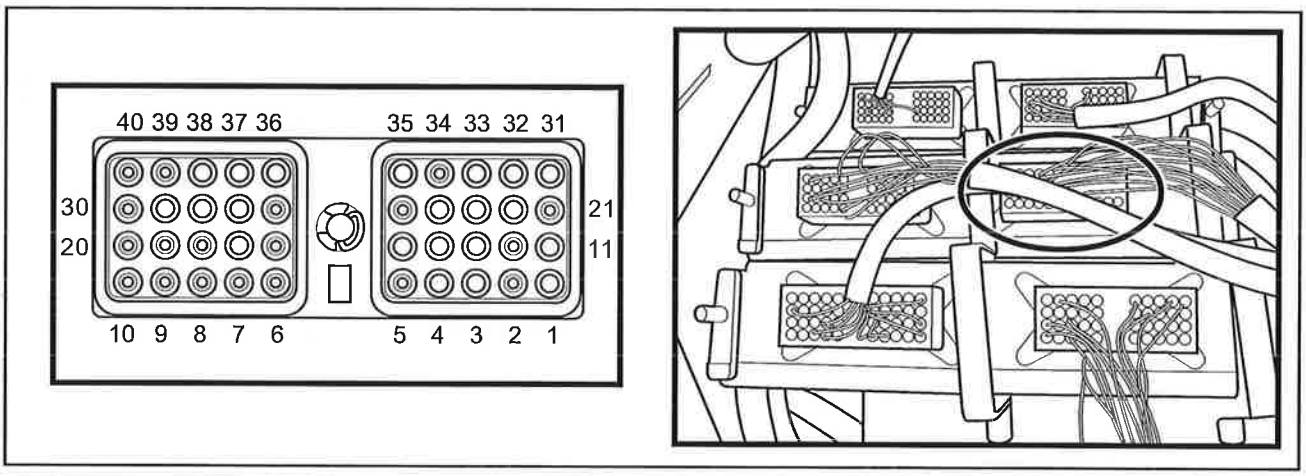

17

	CAVITY	WIRE	LINKED TO CONNECTOR
Connector C202 - Module SCM 2	2	1029 Red	C405-20
	3	3027 Orange	C406-20
	4	7208 Gray	C006-26
	5	7207 White	C006-25
	6	7165 White	C010-14
	7	7224 White	C159-1
	8	8069 Yellow	C183-C
	9	3025 Orange	C406-21
	10	8096 Blue	C008-L
	11	9041 Red	C281-8
	12	9017 Black	C281-10
	13	7204 White	C007-9
	14	2049 Pink	C183-B
	15	7121 White	C217-2
	16	9018 Black	C281-12
	17	7222 White	C008-B
	18	9019 Black	C281-13
	19	7163 Gray	C405-5
	20	8088 Blue	C10-15
	23	8044 Yellow	C169-1
	24	8095 Yellow	C008-A
	26	7223 White	C008-D
	29	8097 Yellow	C008-E
	30	7129 White	C220-1
	35	8098 Yellow	C008-F
	36	8055 Yellow	C068-1
	37	7161 White	C405-7
	39	8070 Blue	C159-2

SCANIA DC9 ENGINE HARNESS (84253504) (Continued)

Located next to the main control, right side

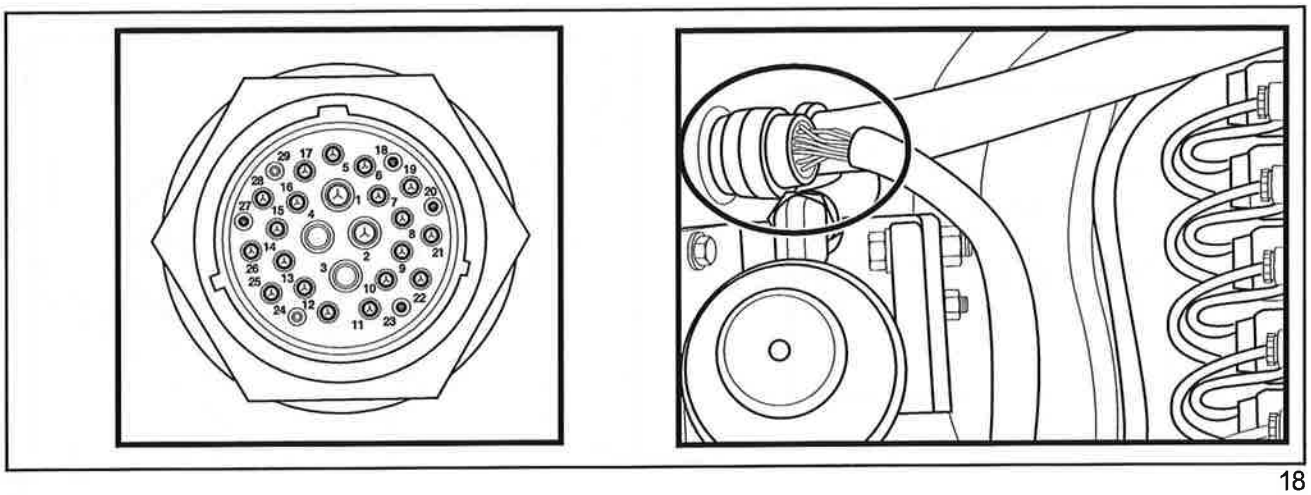

18

	CAVITY	WIRE	LINKED TO CONNECTOR
Connector C006 - Main control harness connector	1	7002 White	C414-50
	2	7001 White	C405-16
	5	7211 White	C102-37 (SCM 1)
	6	7212 Gray	C102-19 (SCM 1)
	7	7213 White	C102-25 (SCM 1)
	8	7214 Gray	C102-30 (SCM 1)
	9	7215 White	C102-4 (SCM 1)
	10	7216 Gray	C102-5 (SCM 1)
	11	7217 White	C102-1 (SCM 1)
	12	7218 Gray	C102-21 (SCM 1)
	13	7219 White	C102-26 (SCM 1)
	14	7220 White	C102-6 (SCM 1)
	15	7221 White	C102-17 (SCM 1)
	16	8094 Blue	C102-10
	17	3011 Orange	C013-14
	18	8000 Yellow	C102-36
	19	7206 White	C013-12
	20	8093 Yellow	C013-13
	21	9202 Blue	C013-4
	22	7209 White	C102-15 (SCM 1)
	23	7205 White	C013-11 (SCM 1)
	25	7207 White	C202-5 (SCM 2)
	26	7208 Gray	C202-4 (SCM 2)
	27	1012 Orange	C406-7
	28	7210 Gray	C102-13 (SCM 1)

SCANIA DC9 ENGINE HARNESS (84253504) (Continued)

Located between the engine and the four-hole gearbox in the upper side

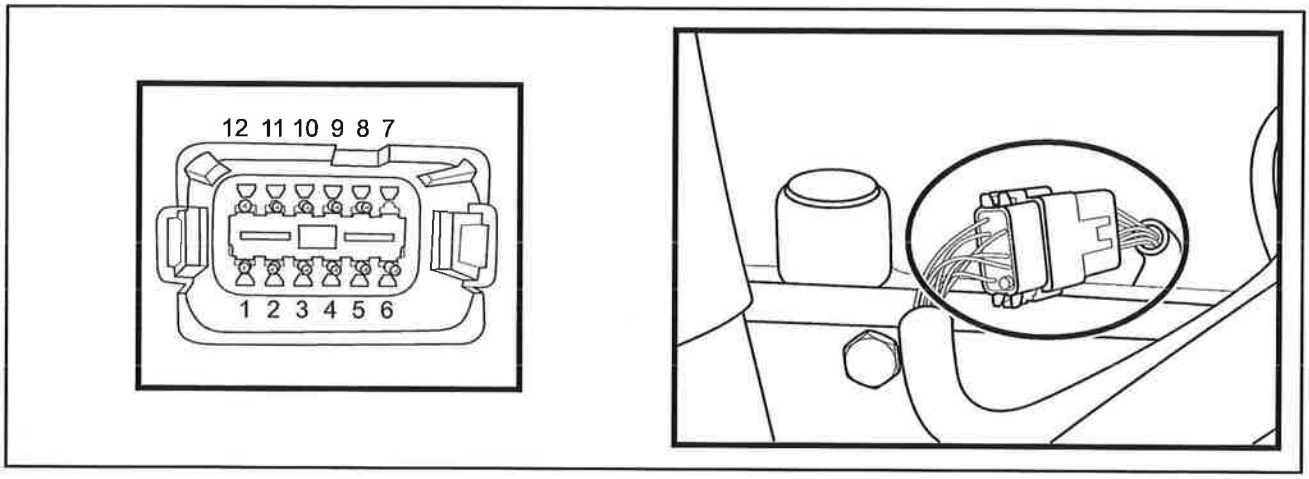

19

	CAVITY	WIRE	LINKED TO CONNECTOR
Connector C007 - Traction pump harness connector	1	2064 Orange	C013-16
	2	9033 Blue	C013-4
	3	3006 Orange	C013-14
	4	7200 White	C013-2
	5	7201 Gray	C013-3
	6	7202 White	C013-6
	7	7203 Gray	C013-8
	8	9203 Black	C284-8 (Groung)
	9	7204 White	C202-13 (SCM 2)
	10	8091 Yellow	C013-5
	11	8092 Yellow	C013-9

SCANIA DC9 ENGINE HARNESS (84253504) (Continued)

Located in the fuse board

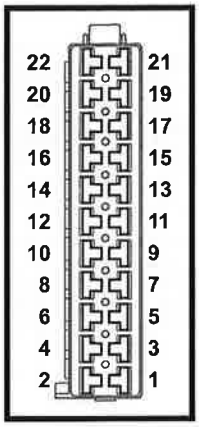

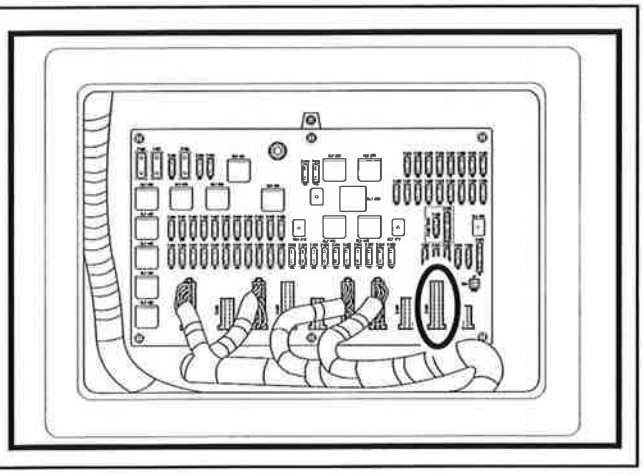

20

	CAVITY	WIRE	LINKED TO CONNECTOR
Connector C405 - Printed circuit board	1	7240 Purple	C010-22
	C	7241 Purple	C010-23
	5	7163 Gray	C202-19
	7	7161 White	C202-37
	14	8063 Yellow	C203-13
	15	7032	C203-20 / C203-19
	16	7001	C006-2
	C	7237 Purple	C010-12
	18	1024 Red	C102-2
	19	7036 Gray	C203-39 / C203-40
	20	1029 Red	C202-2
	21	1030 Red	
	22	1028 Red	C203-7

SCANIA DC9 ENGINE HARNESS (84253504) (Continued)

Located together with the operator's right side modules

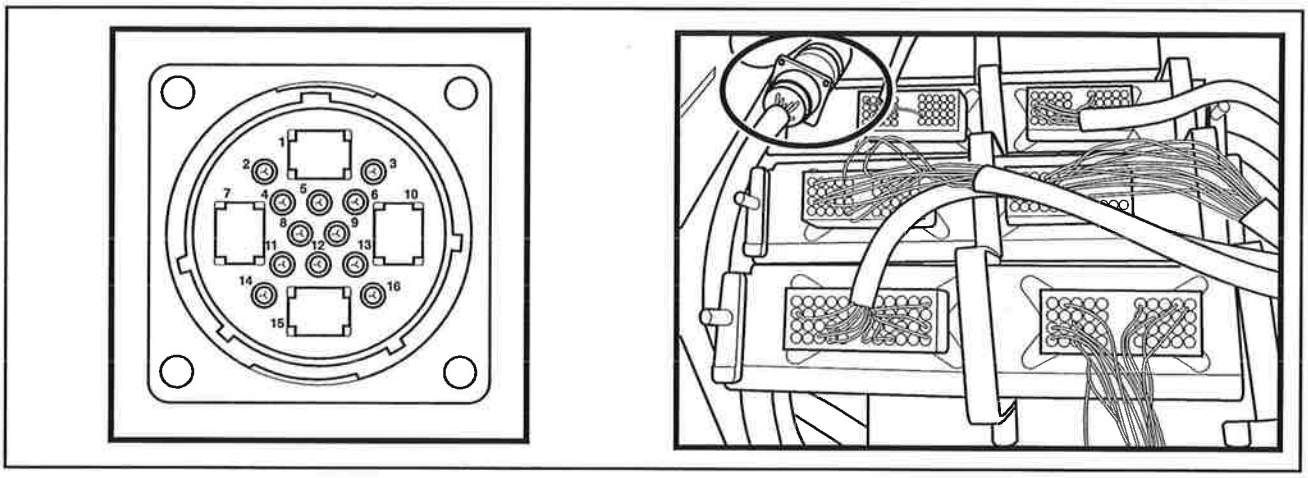

21

	CAVITY	WIRE	LINKED TO CONNECTOR
Connector C013 - Traction Connector	2	7200 White	C007-4
	3	7201 Gray	C017-8
	4	9201 Blue	C013-3
	5	8091 Yellow	C007-10
	6	7202 White	C007-6
	8	7203 Gray	C007-7
	9	8092 Yellow	C007-11
	11	7205 White	C006-23
	12	7206 White	C006-19
	13	8093 Yellow	C006-20
	14	3010 Orange	C006-17 / C007-3
	16	2064 Orange	C007-1

SCANIA DC9 ENGINE HARNESS (84253504) (Continued)

Located next to the chopper control, behind the engine compartment

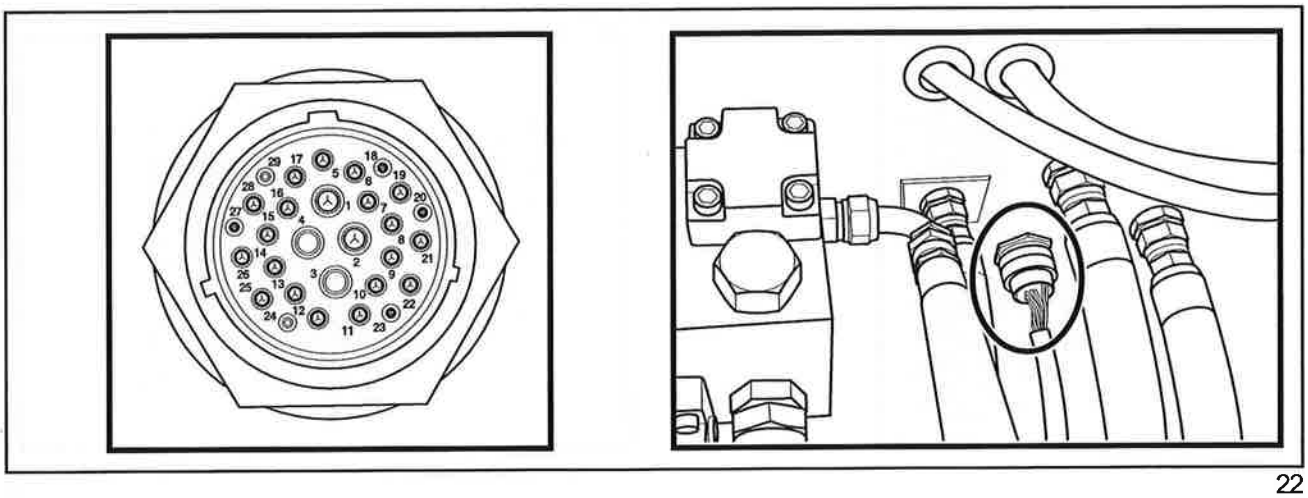

22

	CAVITY	WIRE	LINKED TO CONNECTOR
Connector C010 - Rear connector, left side	1	7236 White	C203-3 (SCM 2)
	2	7227 White	C203-24 (SCM 2)
	3	7228 Gray	C203-25 (SCM 2)
	4	7229 White	C203-2 (SCM 2)
	5	7230 White	C203-6 (SCM 2)
	6	7231 Gray	C203-8 (SCM 2)
	7	7232 White	C203-4 (SCM 2)
	8	7233 Gray	C203-5 (SCM 2)
	9	7234 White	C203-21 (SCM 2)
	10	7235 Gray	C203-1 (SCM 2)
	11	8099 Yellow	C203-18 (SCM 2)
	12	7237 Purple	C405-17
	13	7238 White	C406-13
	14	7165 White	C202-6 (SCM 2)
	15	8088 Blue	C202-20 (SCM 2)
	16	9219 Black	C284-7 (Ground)
	17	9218 Black	C284-6 (Ground)
	18	5041 Green	C406-8
	19	5040 Yellow	C406-6
	20	2065 Orange	C406-15
	21	7239 Purple	C406-22
	22	7240 Purple	C405-1
	23	7241 Purple	C405-2
	24	7242 Purple	C406-10
	25	7243 Purple	C406-9

SCANIA DC9 ENGINE HARNESS (84253504) (Continued)

Located in the fuse board

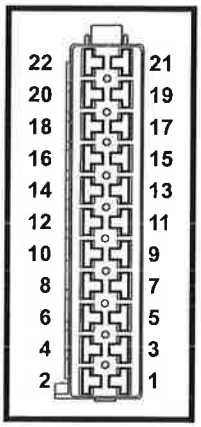

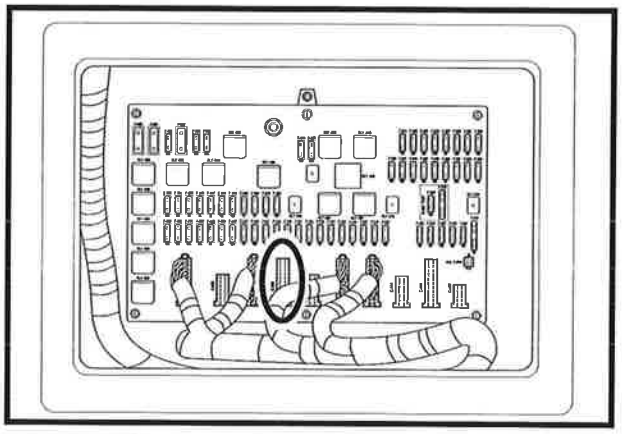

23

	CAVITY	WIRE	LINKED TO CONNECTOR
Connector C406 - Printed circuit board	1	8053 Yellow	C-067-B (SW029)
	4	4029 Green	C415-10
	6	5040 Yellow	C010-19
	7	3050 Orange	Mod-006 ECU -40 / Converter 12 to 24V (C-417-E)
	8	5041 Green	C010-18
	9	7243 Purple	C-10-25
	10	7242 Purple	C-010-24
	12	4028 Yellow	C415-9
	13	7238 White	C-010-13
	14	2036 Pink	C-067-A (SW029)
	15	2065 Orange	C-010-20
	16	3026 Orange	C-203-26
	17	3020 Orange	C-102-9
	18	7246 White	C-50-2 (SW-012)
	19	3022 Orange	C-102-3
	20	3027 Orange	C-202-3
	21	3025 Orange	C-202-9
	22	7239 Purple	C-010-21

SCANIA DC9 ENGINE HARNESS (84253504) (Continued)

Located in fan drive block, right side

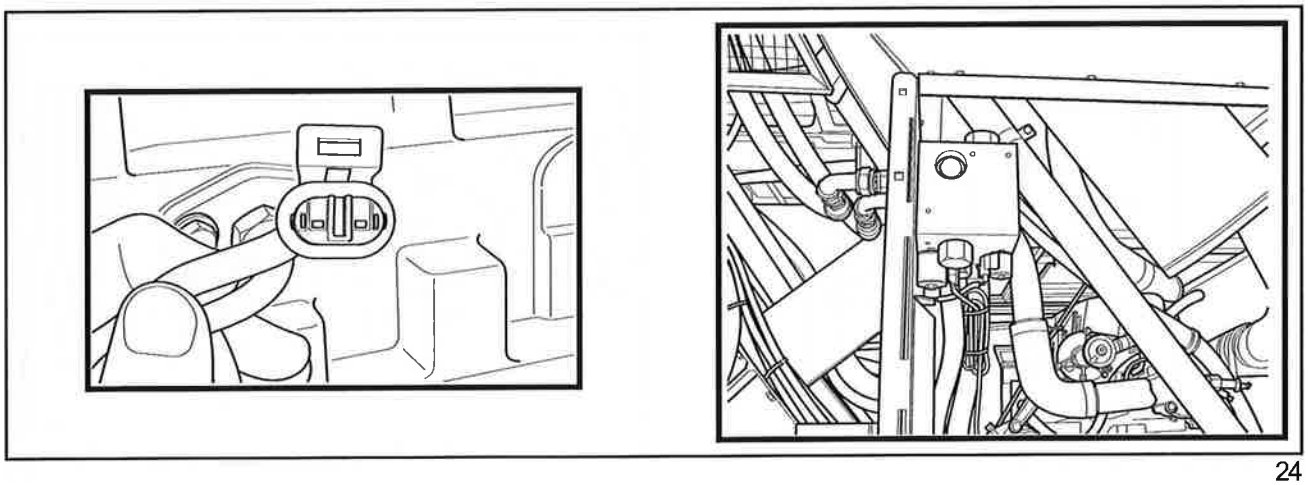

24

	CAVITY	WIRE	LINKED TO CONNECTOR
Connector C159 - Proportional valve fan motor	1 2	7224 White 8070 Blue	C202-7 C202-39

Located in fan drive block, right side

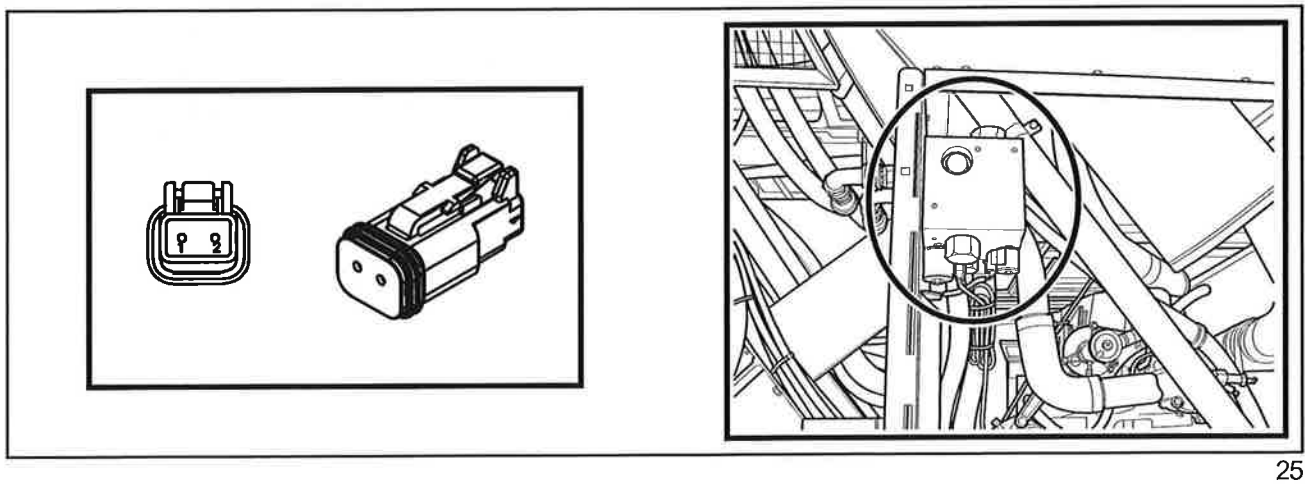

25

	CAVITY	WIRE	LINKED TO CONNECTOR
Connector C220 - Reverse valve fan motor	1 2	7129 White 9038 Black	C202-30 C284-10 (Ground)

SCANIA DC9 ENGINE HARNESS (84253504) (Continued)

Located on the engine's front side with access underneath the cab

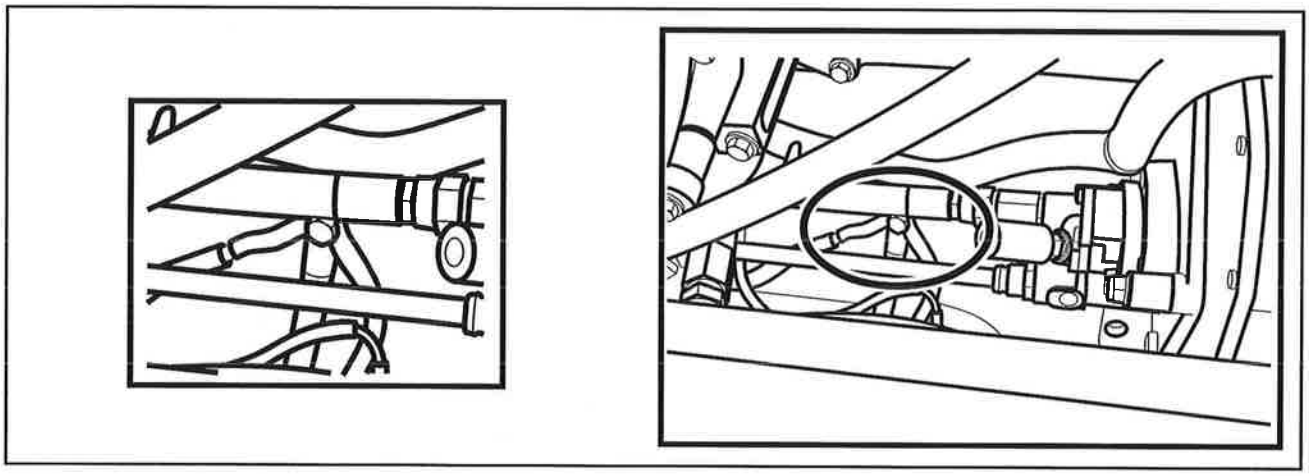

26

	CAVITY	WIRE	LINKED TO CONNECTOR
Connector C284 - Grounding 4	1	9110 Black	C217-1
	2	9205 Blue	C008-K
	3	9126 Blue	C070-1
	4	9207 Black	C008-J
	5	9138 Blue	C183-A
	6	9218 Black	C010-17
	7	9219 Blue	C010-16
	8	9203 Black	C007-8
	9	9114 Blue	C171-1
	10	9038 Black	C220-2

SCANIA DC9 ENGINE HARNESS (84253504) (Continued)

Located under printed circuit board

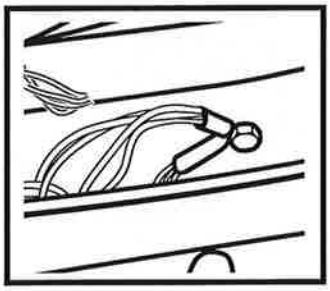

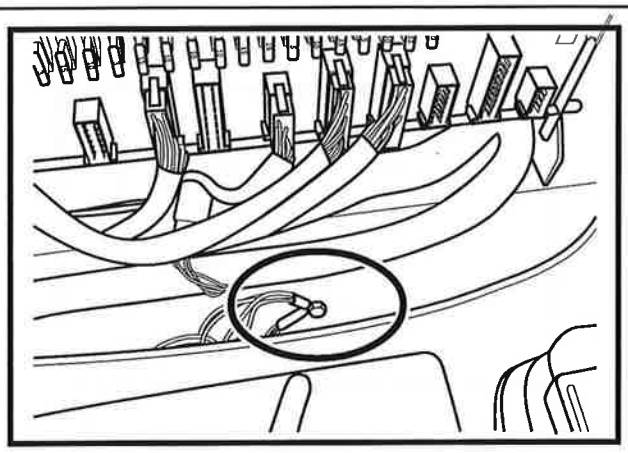

27

	CAVITY	WIRE	LINKED TO CONNECTOR
Connector C281 - Grounding	1	9014 Black	C171-1
	2	9020 Black	C203-12
	3	9231 Black	C417-A
	4	9042 Black	C203-9
	5	9037 Black	C102-11
	6	9012 Black	C102-12
	7	9040 Black	C203-16
	8	9041	C202-11
	9	9043	C203-10
	10	9017	C202-12
	11	9013	C102-31
	12	9018	C202-16
	13	9019	C202-18

ELEVATOR HOSES HARNESS (87733447)

Elevator top connector, located in the elevator's upper side, together with the elevator control

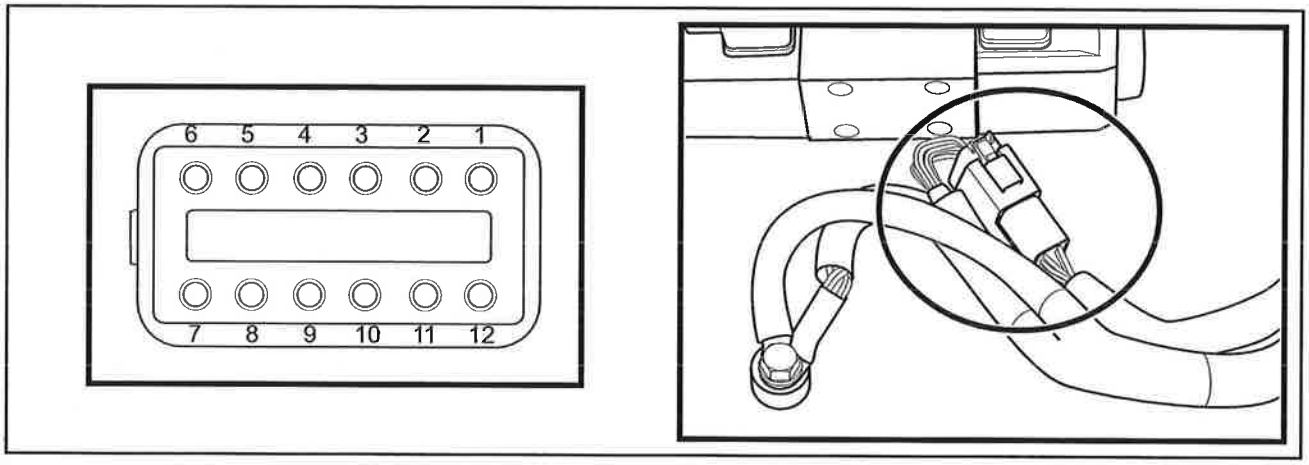

28

	CAVITY	WIRE	LINKED TO CONNECTOR
Connector C005 - Elevator upper side connector	1	7171 White	C019-1
	2	7173 White	C019-2
	3	7175 Gray	C019-3
	4	7177 White	C019-4
	5	7179 White	C019-5
	6	7181 Gray	C019-6
	7	7183 White	C019-7
	8	7185 Gray	C019-8
	9	7187 White	C019-9
	10	7189 Gray	C019-10
	11	7071 Purple	C019-11

ELEVATOR HOSES HARNESS (87733447) (Continued)

Elevator lower side connector, located in the chassis's left side, next to the chopper hydraulic motors

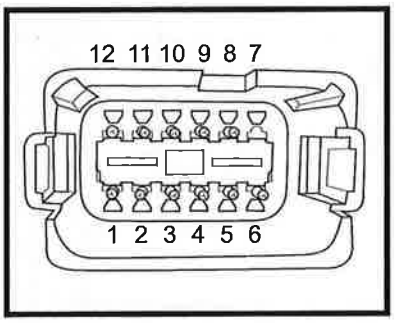

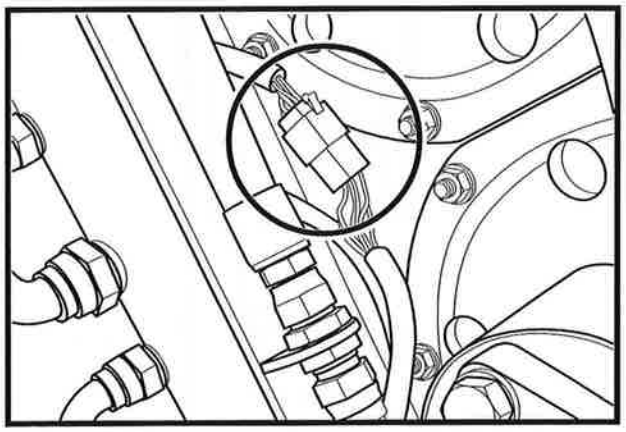

29

	CAVITY	WIRE	LINKED TO CONNECTOR
Connector C019 - Elevator lower side connector	1	7248 White	C 010-1
	2	7249 White	C 010-2
	3	7250 Gray	C 010-3
	4	7251 White	C 010-4
	5	7252 White	C 010-5
	6	7253 Gray	C 010-6
	7	7254 White	C 010-7
	8	7255 Gray	C 010-8
	9	7256 White	C 010-9
	10	7257 Gray	C 010-10
	11	7258 Purple	C 010-12

REAR RIGHT-SIDE HARNESS (84254471)

Connectors located in the machine's upper right-side, together with the cooling package

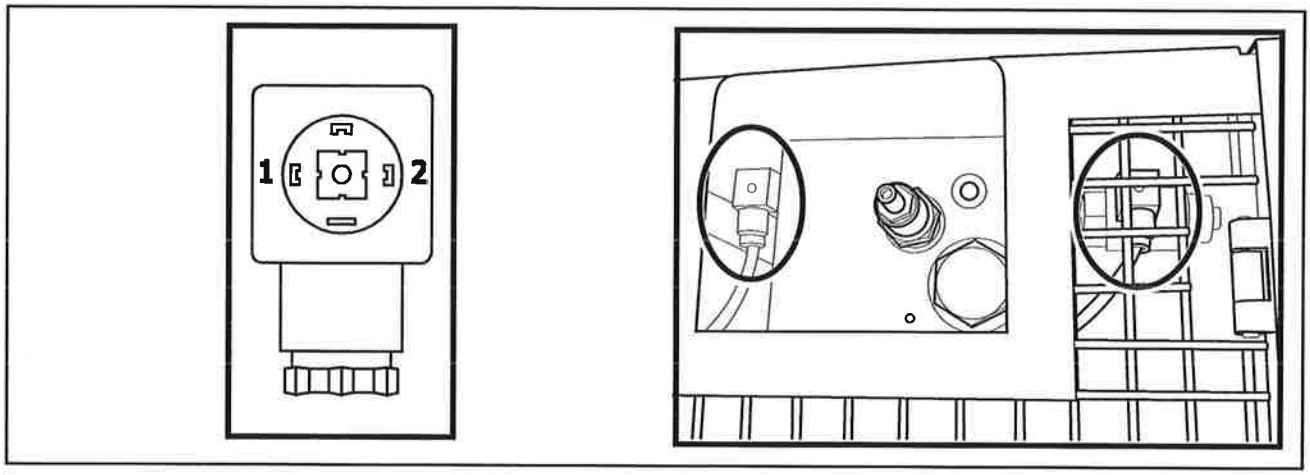

30

	CAVITY	WIRE	LINKED TO CONNECTOR
Connector C221 - Primary extractor fan ON / OFF (SOL-012)	1 2	9206 Black 7128 White	C008-J C008-B
Connector C222 - Primary extractor control (SOL-013)	1 2	8070 Blue 7129 White	C008-L C008-D

Sensor located in the upper side of the primary extractor frame

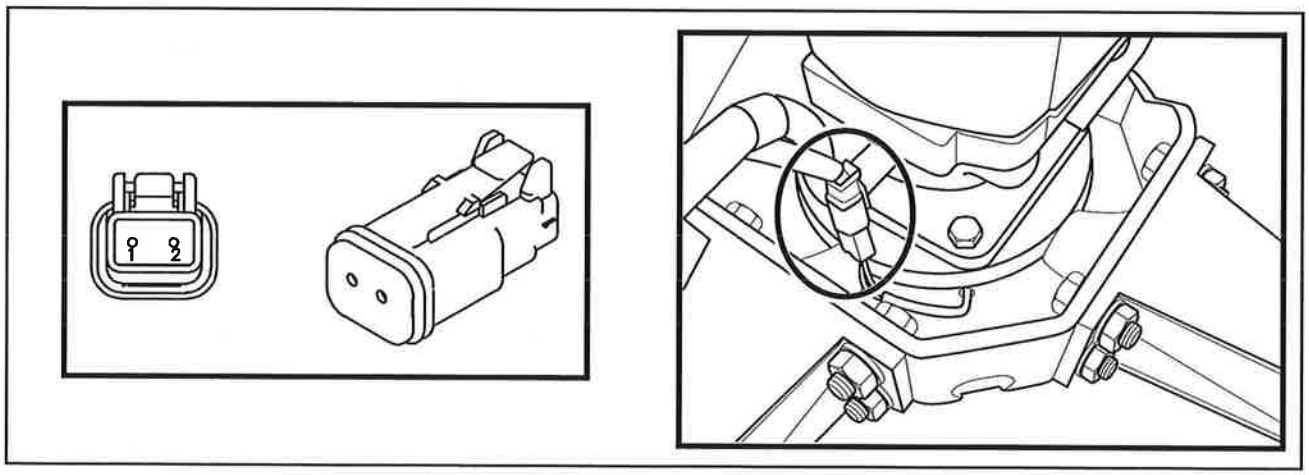

31

	CAVITY	WIRE	LINKED TO CONNECTOR
Connector C184 - Primary extractor speed sensor (SEN-020)	1 2	9140 Blue 8071 Yellow	C008-K C008-A

REAR RIGHT-SIDE HARNESS (84254471) (Continued)

Located behind the chopper flywheel, machine's right side

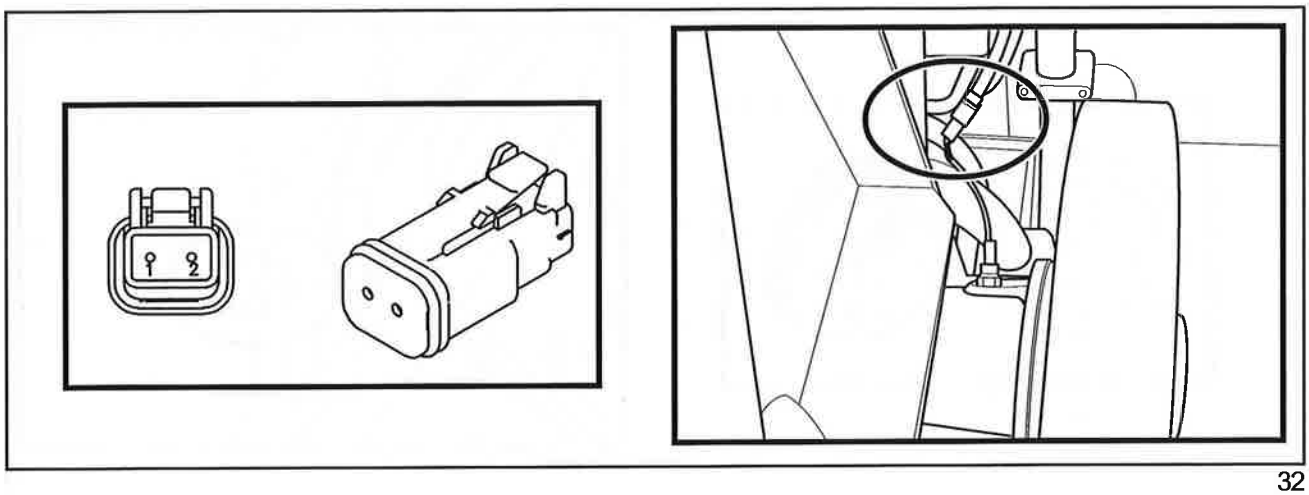

32

	CAVITY	WIRE	LINKED TO CONNECTOR
Connector C182 - Chopper speed sensor (SEN-018)	1 2	9137 Blue 8068 Yellow	C008-K C008-E

Located together to the hydraulic oil tank

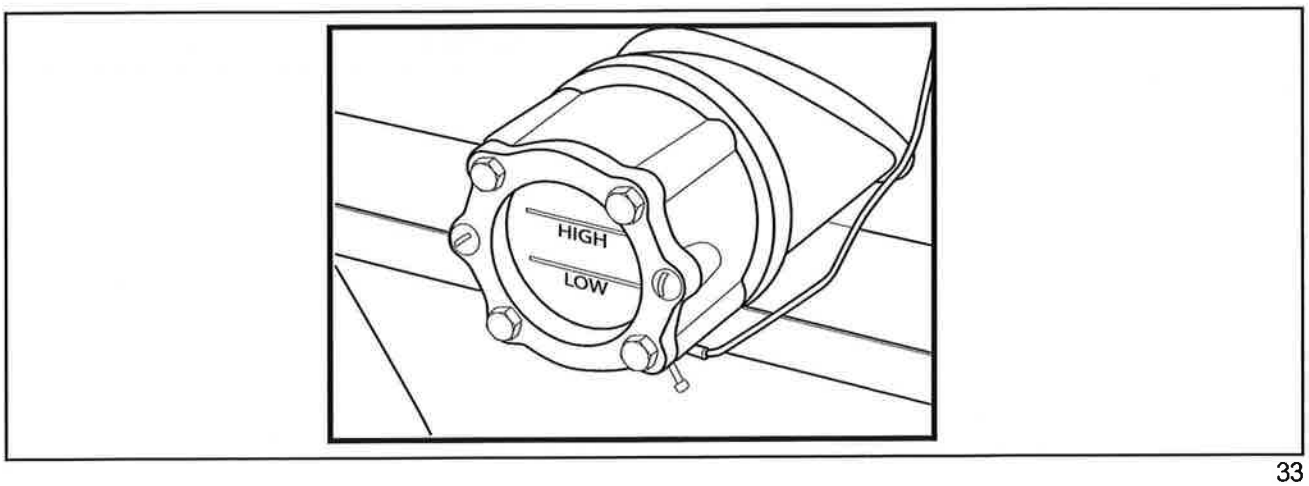

33

	CAVITY	WIRE	LINKED TO CONNECTOR
Connector C066 - Hydraulic oil switch (SW-028)	1 2	8051 Yellow Ground	C008-F Chassis

REAR RIGHT-SIDE HARNESS (84254471) (Continued)

Located in the rear side of the engine compartment, right-side

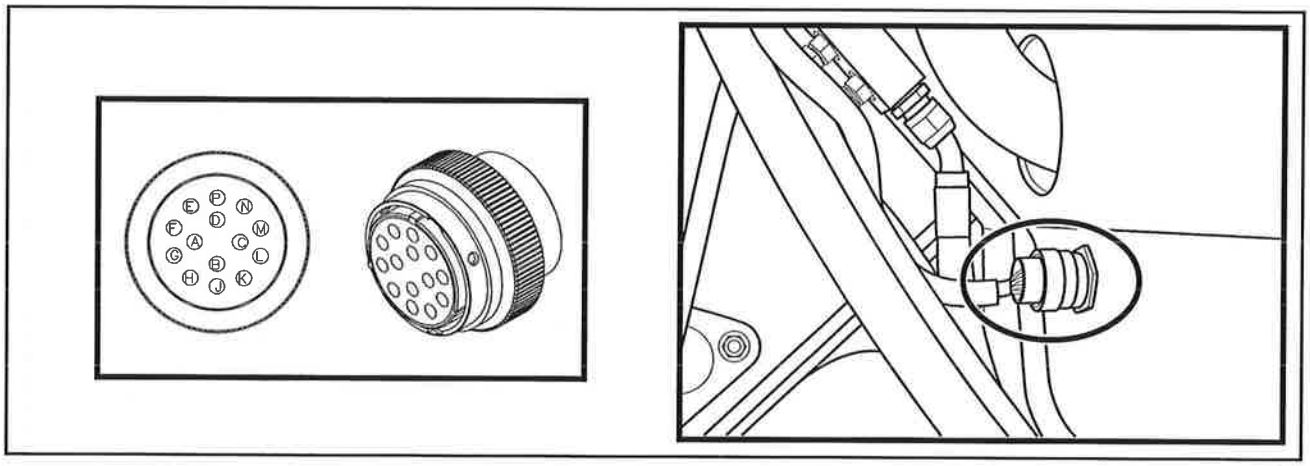

34

	CAVITY	WIRE	LINKED TO CONNECTOR
Connector C008 - Rear connector	A	8071 Yellow	C184-2
	B	7128 White	C221-2
	D	7129 White	C222-2
	E	8068 Yellow	C182-2
	F	8051 Yellow	C066-1
	J	9206 Black	C221-1
	K	9204 Blue	C008-K
	L	8070 Blue	C222-1

IVECO C9 ENGINE HARNESS (84253507)

Located in the engine compartment, right side

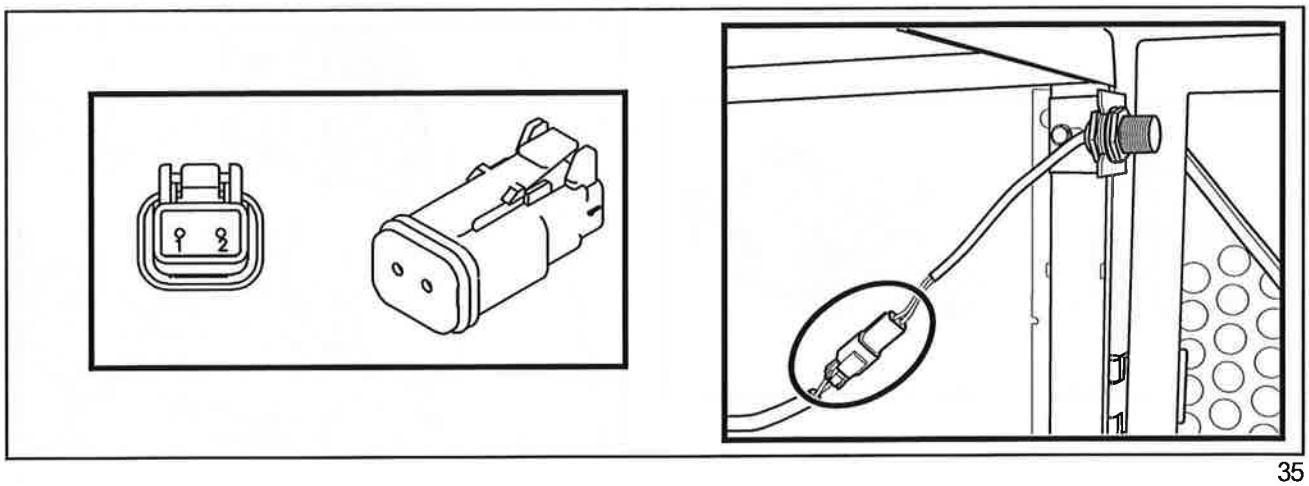

35

	CAVITY	WIRE	LINKED TO CONNECTOR
Connector C171 - Service door sensor	1 2	9114 Blue 8039 Yellow	C284-13 (Ground) C203-27 (SCM 2)

Located in the expansion tank

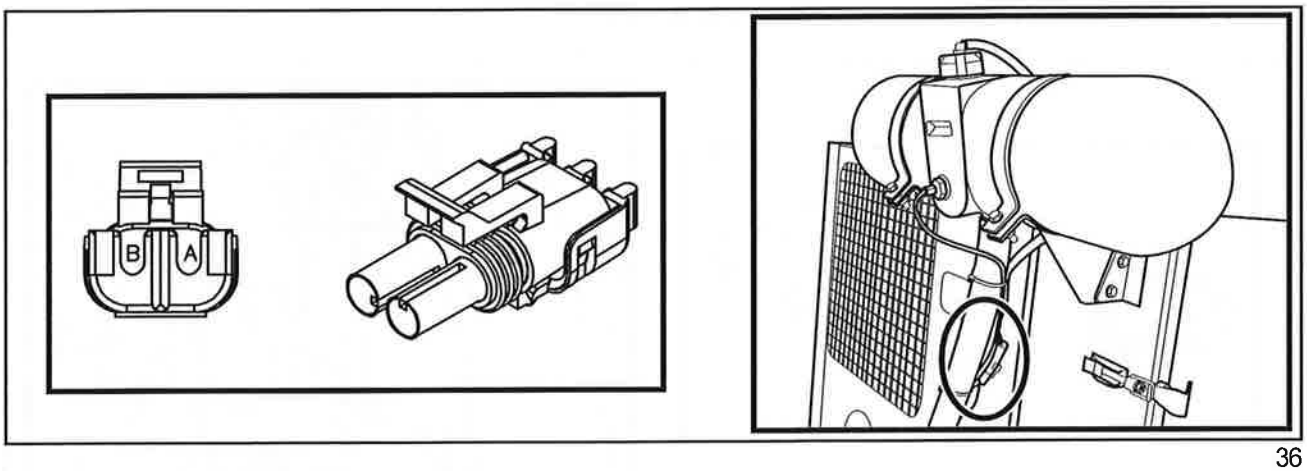

36

	CAVITY	WIRE	LINKED TO CONNECTOR
Connector C067 - Water level switch	A B	2036 Pink 8053 Yellow	C406-14 C406-1

IVECO C9 ENGINE HARNESS (84253507) (Continued)

Location together with the air conditioning compressor

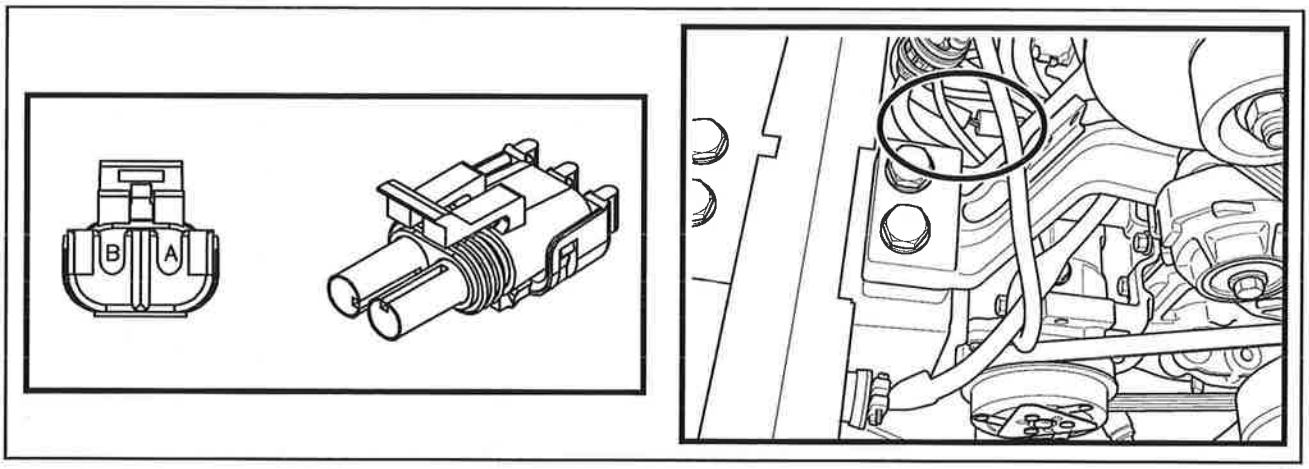

37

	CAVITY	WIRE	LINKED TO CONNECTOR
Connector C049 - Air conditioning low pressure switch	1 2	7247 White 7051 White	C050-1 C216-A

Location together with the air conditioning compressor

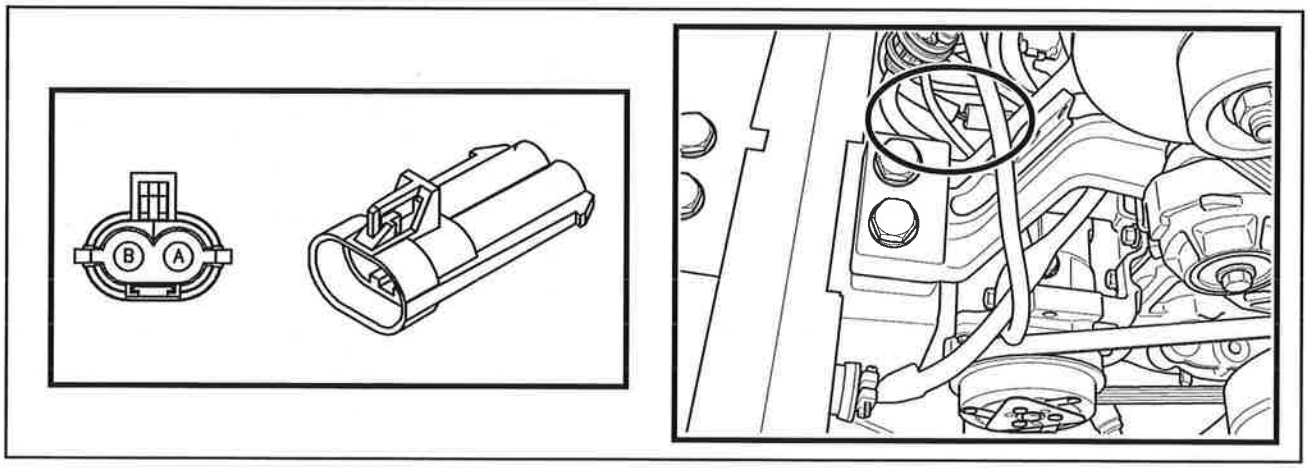

38

	CAVITY	WIRE	LINKED TO CONNECTOR
Connector C050 - Air conditioning high pressure switch	1 2	7247 White 7046 White	C049-1 C406-18

IVECO C9 ENGINE HARNESS (84253507) (Continued)

Location together with the air conditioning compressor

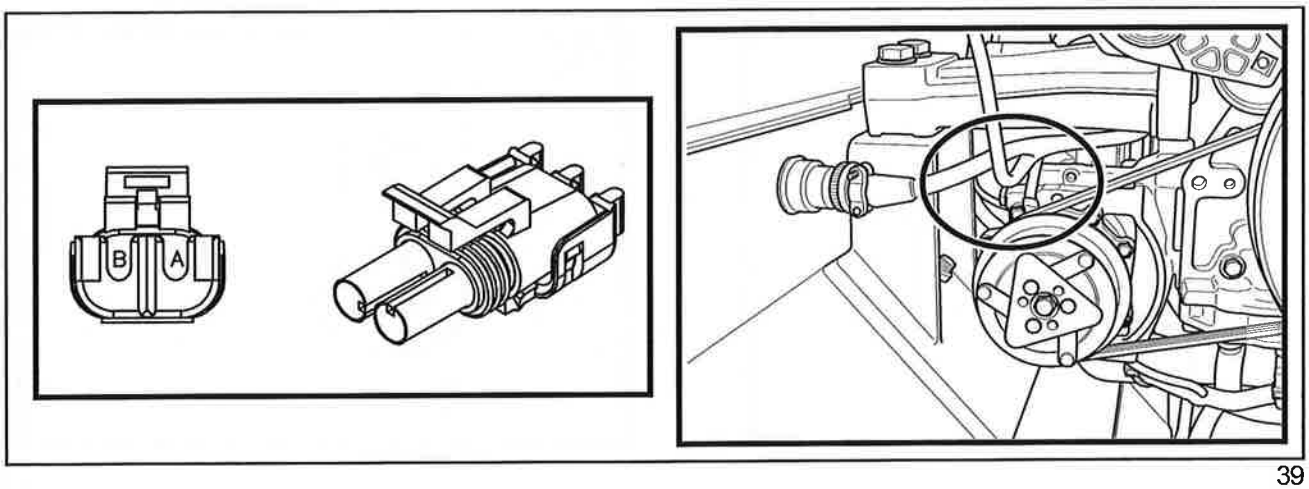

39

	CAVITY	WIRE	LINKED TO CONNECTOR
Connector C216 - Air conditioning compressor coil solenoid	A B	7051 White 9068 Black	C049-2 C284-15 (Ground)

Located in the chopper block

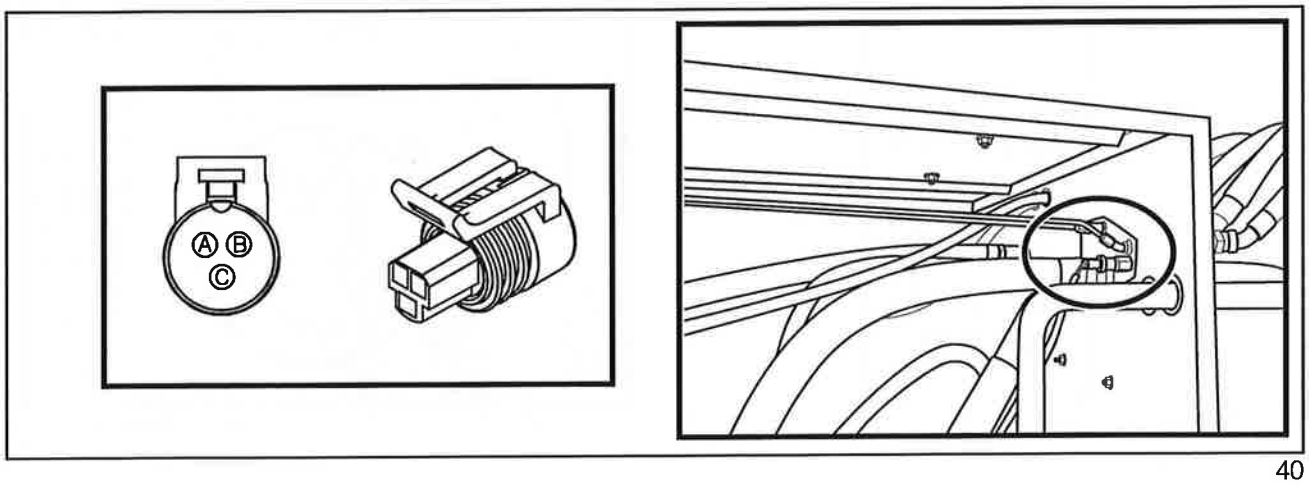

40

	CAVITY	WIRE	LINKED TO CONNECTOR
Connector C183 - Chopper pressure sensor	A B C	9138 Blue 2049 Pink 8069 Yellow	C284-14 C202-14 (SCM 2) C202-8 (SCM 2)

IVECO C9 ENGINE HARNESS (84253507) (Continued)

Located in the engine compartment, right side

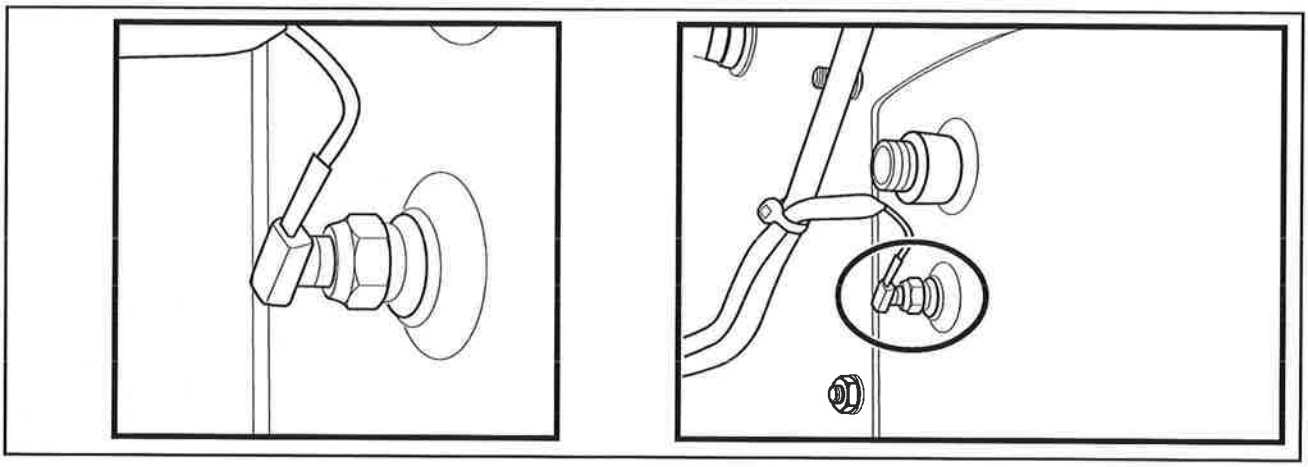

41

	CAVITY	WIRE	LINKED TO CONNECTOR
Connector C169 - Hydraulic oil temperature sensor	1	8044 Yellow	C202-23 (SCM 2)

Located in the engine compartment, left side

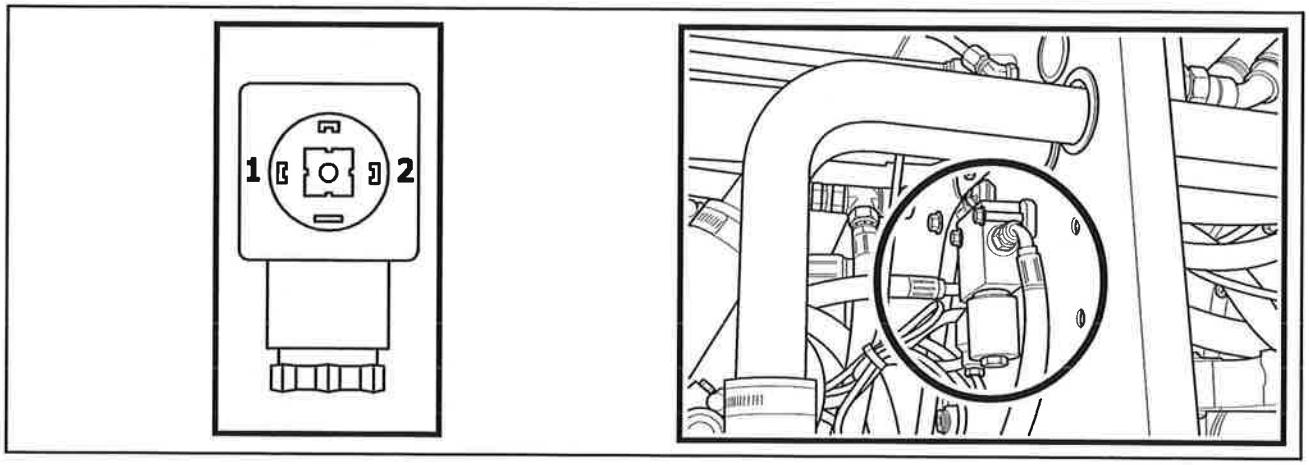

42

	CAVITY	WIRE	LINKED TO CONNECTOR
C217 - Parking brake valve	1 2	9110 Black 7121 White	C284-4 (Ground) C202-15 (SCM 2)

IVECO C9 ENGINE HARNESS (84253507) (Continued)

Located in the engine ECU

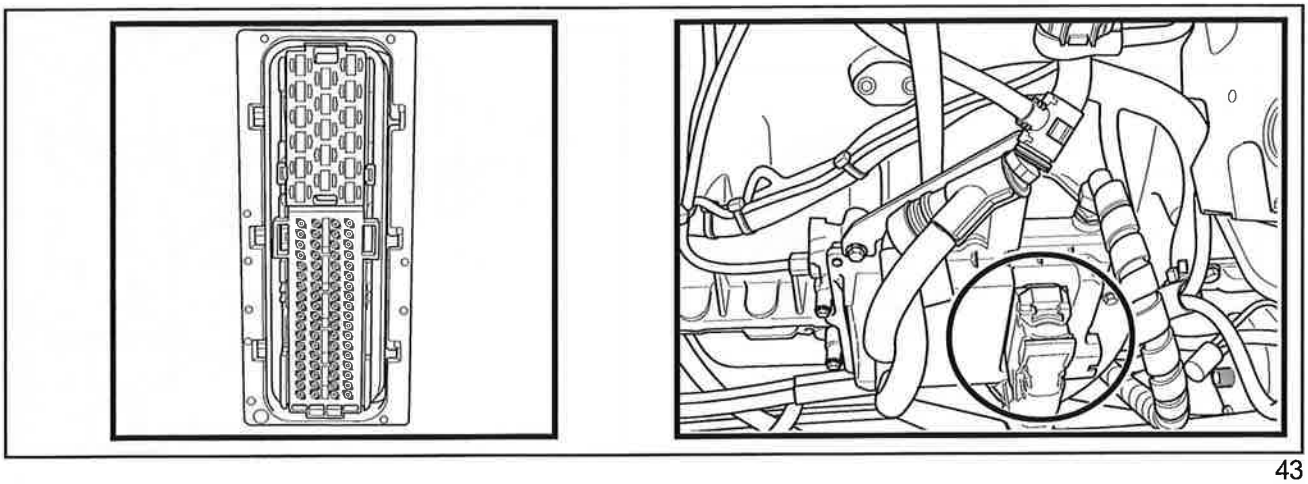

43

	CAVITY	WIRE	LINKED TO CONNECTOR
Connector C418 - Engine - Electronic Control Unit (ECU)	2	1008 Red	C411-2
	3	1009 Red	C411-2
	5	9006 Black	C284-10 (Ground)
	6	9007 Black	C284-11 (Ground)
	8	1010 Red	C411-2
	9	1011 Red	C411-2
	10	9008 Black	C284-8 (Ground)
	11	9009 Black	C284-12 (Ground)
	34	4029 Green	C406-4
	35	4028 Yellow	C406-12
	40	2080 Orange	C406-7 / C006-27
	42	8000 Yellow	C-006-18
	89	6100 Yellow	C-405-4

IVECO C9 ENGINE HARNESS (84253507) (Continued)

Located in the engine compartment rear side, right side

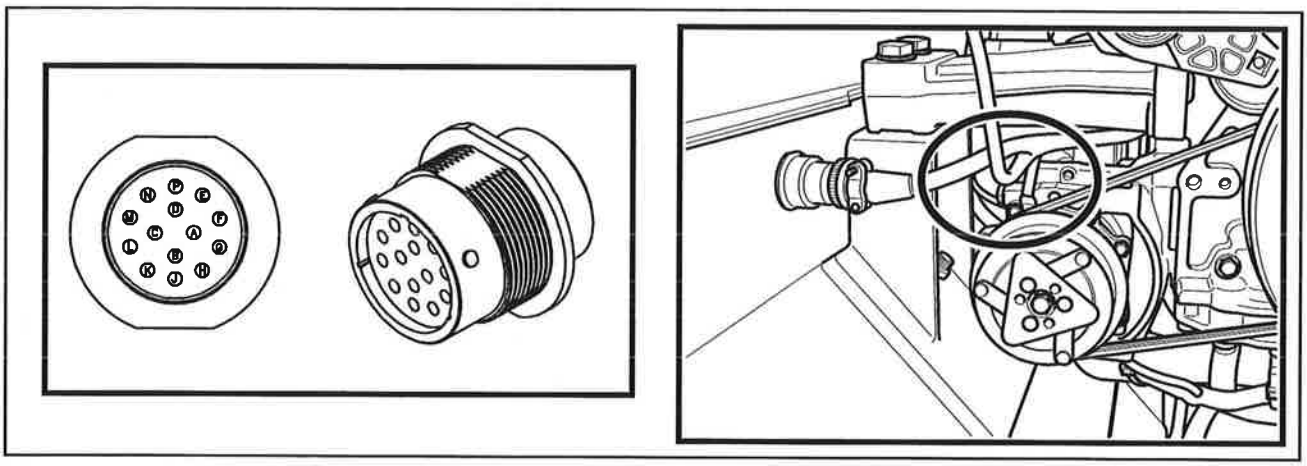

44

	CAVITY	WIRE	LINKED TO CONNECTOR
Connector C008 DEUTSCH - Rear connector, right side	A	8095 Yellow	C202-24 (SCM 2)
	B	7222 White	C202-17 (SCM 2)
	D	7223 White	C202-26 (SCM 2)
	E	8097 Yellow	C202-29 (SCM 2)
	F	8098 Yellow	C202-35 (SCM 2)
	J	9207 Black	C284-5 (Ground)
	K	9205 Blue	C284-2
	L	8096 Blue	C202-10 (SCM 2)

IVECO C9 ENGINE HARNESS (84253507) (Continued)

Located in the operator's seat, right side

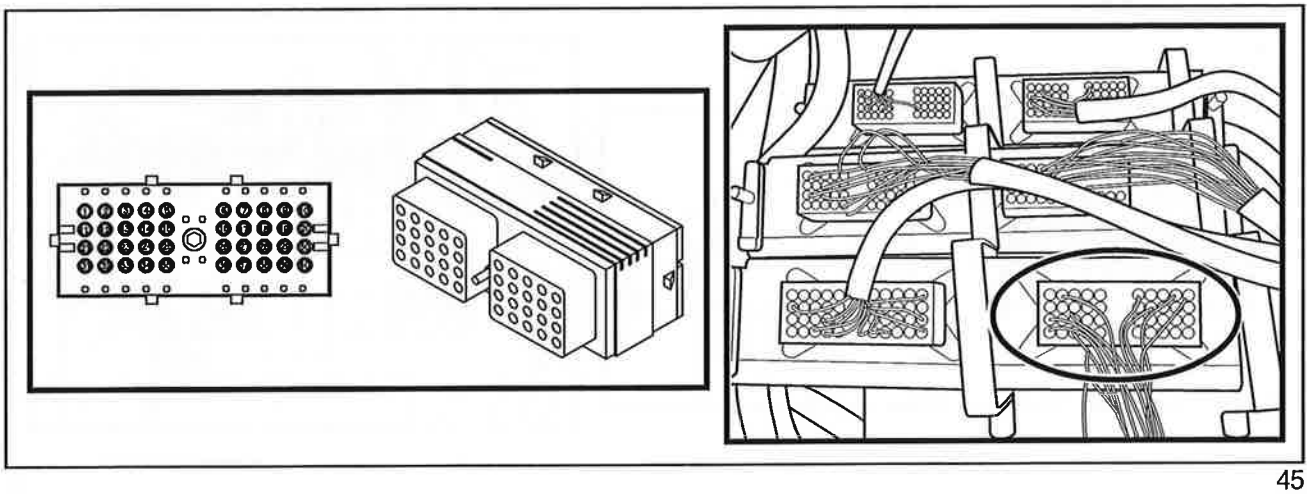

45

	CAVITY	WIRE	LINKED TO CONNECTOR
Connector C102 - Module SCM 1 connector 2	1	7217 White	C006-11
	2	1024 Red	C405-18
	3	3022 Orange	C406-19
	4	7215 White	C006-9
	5	7216 Gray	C006-10
	6	7220 White	C006-14
	9	3020 Orange	C406-17
	10	8094 Blue	C006-16
	11	9037 Black	C281-11 (Ground)
	12	9012 Black	C281-6 (Ground)
	13	7210 Gray	C006-28
	15	7209 White	C006-22
	17	7221 White	C006-15
	19	7212 Gray	C006-6
	21	7218 Gray	C006-12
	25	7213 White	C006-7
	26	7219 White	C006-13
	30	7214 Gray	C006-8
	31	9013 Black	C281-7 (Ground)
	32	9014 Black	C281-4 (Ground)
	37	7211 White	C006-5

IVECO C9 ENGINE HARNESS (84253507) (Continued)

Located in the operator's seat, right side

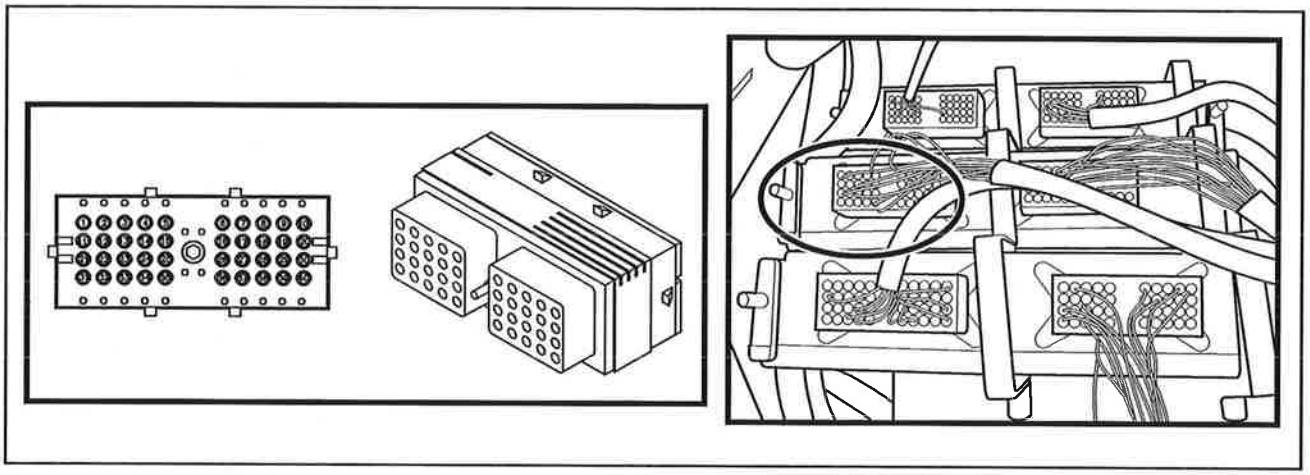

46

	CAVITY	WIRE	LINKED TO CONNECTOR
Connector C203 - Module SCM 2 connector 3	1	7235 Gray	C010-10
	2	7229 White	C010-4
	3	7236 White	C010-1
	4	7232 White	C010-7
	5	7233 Gray	C010-8
	6	7230 White	C010-5
	7	1028 Red	C405-22
	8	7231 Gray	C010-6
	9	9042 Black	C281-10 (Ground)
	10	9043 Black	C281-12 (Ground)
	12	9020 Black	C281-3 (Ground)
	13	8063 Yellow	C405-14
	16	9040 Black	C281-8 (Ground)
	18	8099 Yellow	C010-11
	19	7030 White	C405-15
	20	7031 White	C405-15
	21	7234 White	C010-9
	24	7227 White	C010-2
	25	7228 Gray	C010-3
	26	3026 Orange	C406-16
	27	8039 Yellow	C171-2
	29	1031 Red	C405-21
	30	1032 Red	C405-21
	39	7034 Gray	C405-19
	40	7035 Gray	C405-19

IVECO C9 ENGINE HARNESS (84253507) (Continued)

Located in the operator's seat, right side

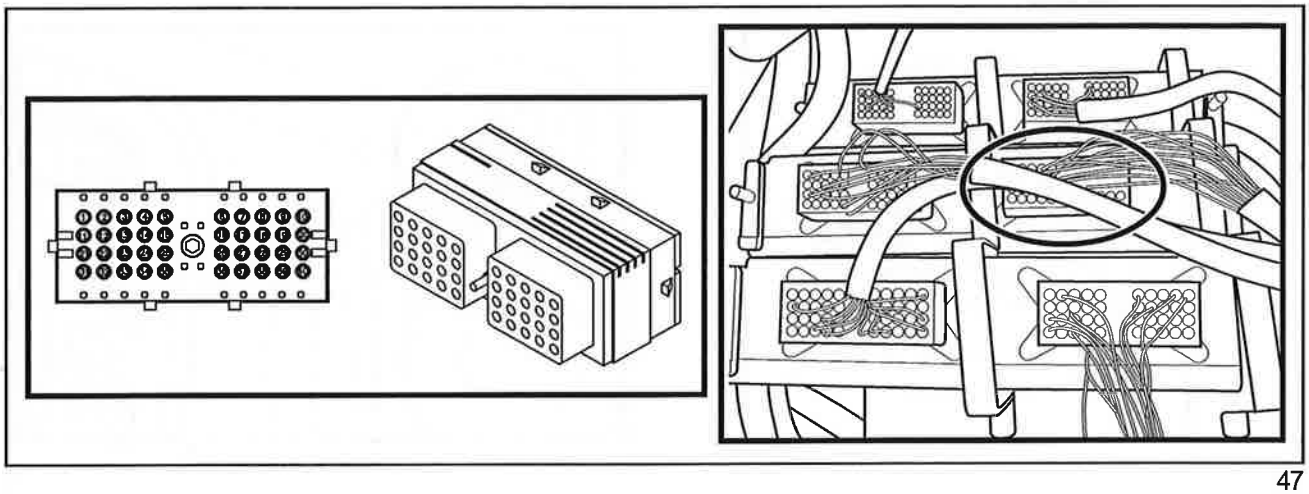

47

	CAVITY	WIRE	LINKED TO CONNECTOR
Connector C202 - Module SCM 2	2	1029 Red	C405-20
Connector 2	3	3027 Orange	C406-20
	4	7208 Gray	C006-26
	5	7207 White	C006-25
	6	7165 White	C010-14
	7	7224 White	C008-3
	8	8069 Yellow	C183-C
	9	3025 Orange	C406-21
	10	8096 Blue	C008-L
	11	9041 Black	C281-9 (Ground)
	12	9017 Black	C281-1 (Ground)
	13	7204 White	C007-9
	14	2049 Pink	C183-B
	15	7121 White	C217-2
	16	9018 Black	C281-2 (Ground)
	17	7222 White	C008-B
	18	9019 Black	C281-5 (Ground)
	19	7163 Gray	C405-5
	20	8088 Blue	C010-15
	23	8044 Yellow	C169-1
	24	8095 Yellow	C008-A
	26	7223 White	C008-D
	29	8097 Yellow	C008-E
	30	7129 White	C220-1
	35	8098 Yellow	C008-F
	36	8055 Yellow	C068-1
	37	7161 White	C405-7
	38	8049 Yellow	C065-1
	39	8070 Blue	C159-2

IVECO C9 ENGINE HARNESS (84253507) (Continued)

Located next to the main control, right side

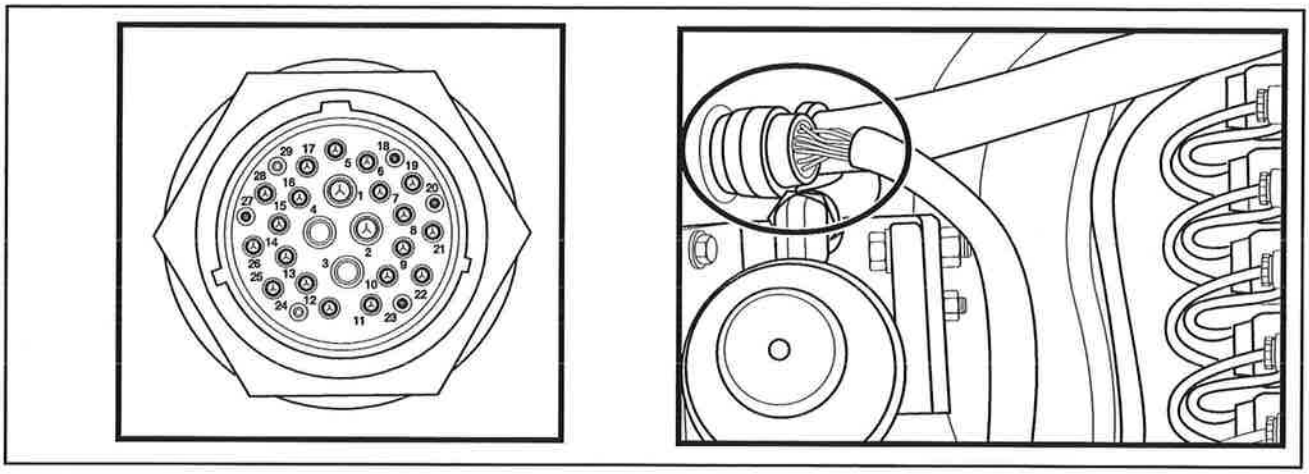

48

	CAVITY	WIRE	LINKED TO CONNECTOR
Connector C006 - Main control harness connector	1	7002 White	C414-50
	2	7001 White	C405-16
	5	7211 White	C102-37 (SCM 1)
	6	7212 Gray	C102-19 (SCM 1)
	7	7213 White	C102-25 (SCM 1)
	8	7214 Gray	C102-30 (SCM 1)
	9	7215 White	C102-4 (SCM 1)
	10	7216 Gray	C102-5 (SCM 1)
	11	7217 White	C102-1 (SCM 1)
	12	7218 Gray	C102-21 (SCM 1)
	13	7219 White	C102-26 (SCM 1)
	14	7220 White	C102-6 (SCM 1)
	15	7221 White	C102-17 (SCM 1)
	16	8094 Blue	C102-10
	17	3011 Orange	C013-14
	18	8000 Yellow	C418-42
	19	7206 White	C013-12
	20	8093 Yellow	C013-13
	21	9202 Blue	C013-4 / C007-2
	22	7209 White	C102-15 (SCM 1)
	23	7205 White	C013-11 (SCM 1)
	25	7207 White	C202-5 (SCM 2)
	26	7208 Gray	C202-4 (SCM 2)
	27	2063 Orange	C418-40 / C406-7
	28	7210 Gray	C102-13 (SCM 1)

IVECO C9 ENGINE HARNESS (84253507) (Continued)

Located between the engine and the four-hole gearbox in the upper side

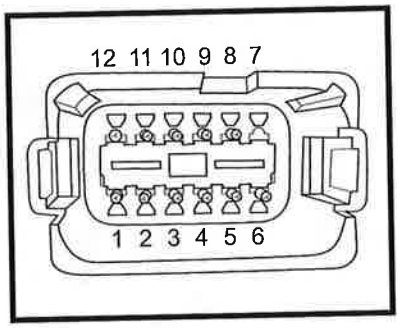

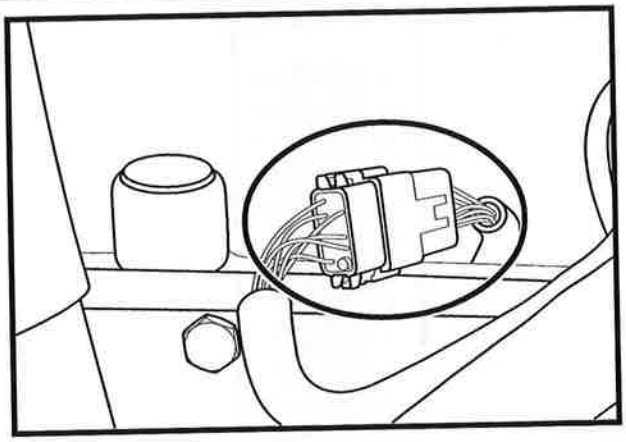

49

	CAVITY	WIRE	LINKED TO CONNECTOR
Connector C007 - Traction pump harness connector	1	2064 Orange	C013-16
	2	9033 Blue	C013-4 / C007-2
	3	3006 Orange	C013-14 / C006-17
	4	7200 White	C013-2
	5	7201 Gray	C013-3
	6	7202 White	C013-6
	7	7203 Gray	C013-8
	8	9203 Black	C284-6 (Ground)
	9	7204 White	C202-13 (SCM 2)
	10	8091 Yellow	C013-5
	11	8092 Yellow	C013-9

IVECO C9 ENGINE HARNESS (84253507) (Continued)

Located in the fuse board

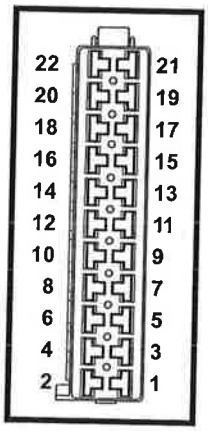

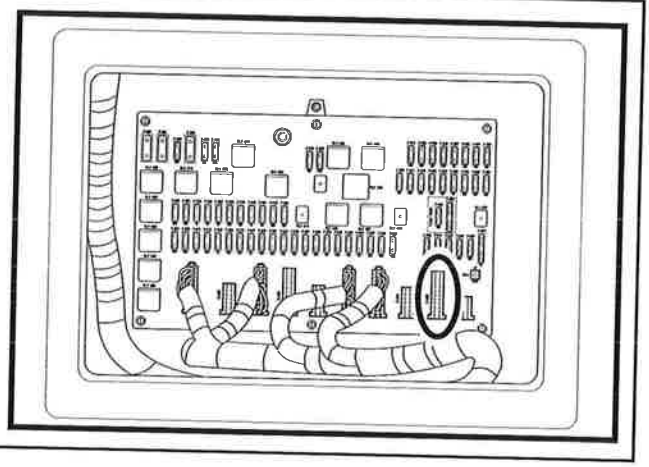

50

	CAVITY	WIRE	LINKED TO CONNECTOR
Connector C405 - Printed circuit board	1	7240 Purple	C010-22
	2	7241 Purple	C010-23
	4	6100 Yellow	C418-89
	5	7163 Gray	C202-19
	7	7161 White	C202-37
	14	8063 Yellow	C203-13
	15	7032 White	C203-19 / C203-20
	16	7001 White	C006-2
	17	7237 Purple	C010-12
	18	1024 Red	C102-2
	19	7036 Gray	C203-39 / C203-40
	20	1029 Red	C202-2
	21	1030 Red	C203-29 / C203-30
	22	1028 Red	C203-7

IVECO C9 ENGINE HARNESS (84253507) (Continued)

Located together with the operator's right side modules

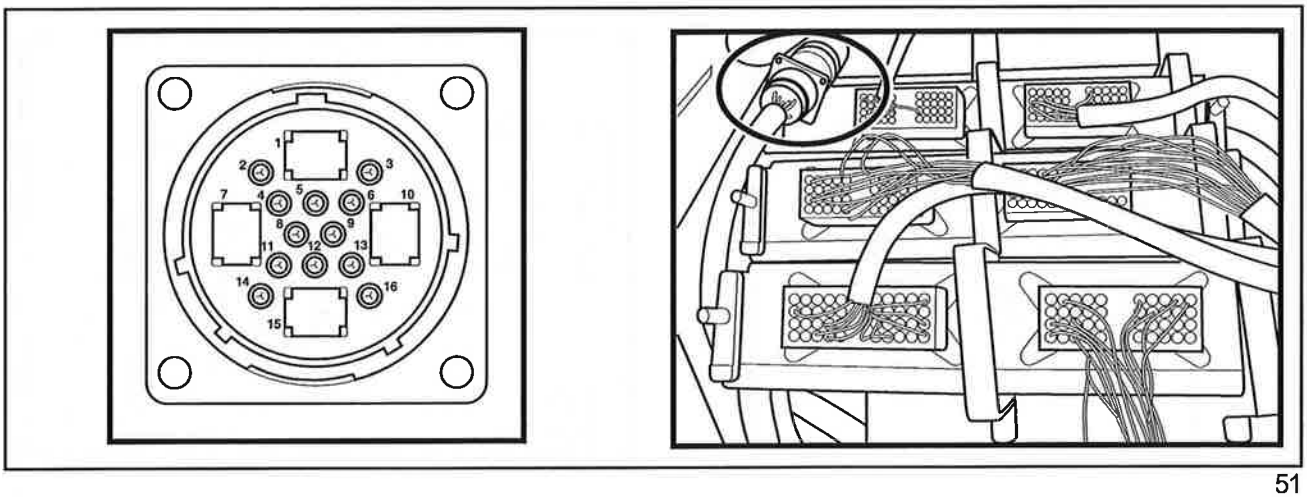

51

	CAVITY	WIRE	LINKED TO CONNECTOR
Connector C013 - Traction Connector	2	7200 White	C007-10
	3	7201 Gray	C007-5
	4	9201 Blue	C006-21
	5	8091 Yellow	C007-10
	6	7202 White	C007-6
	8	7203 Gray	C007-7
	9	8092 Yellow	C007-11
	11	7205 White	C006-23
	12	7206 White	C006-19
	13	8093 Yellow	C006-20
	14	3010 Orange	C006-17 / C007-3
	16	2064 Orange	C007-1

IVECO C9 ENGINE HARNESS (84253507) (Continued)

Located next to the chopper control, behind the engine compartment

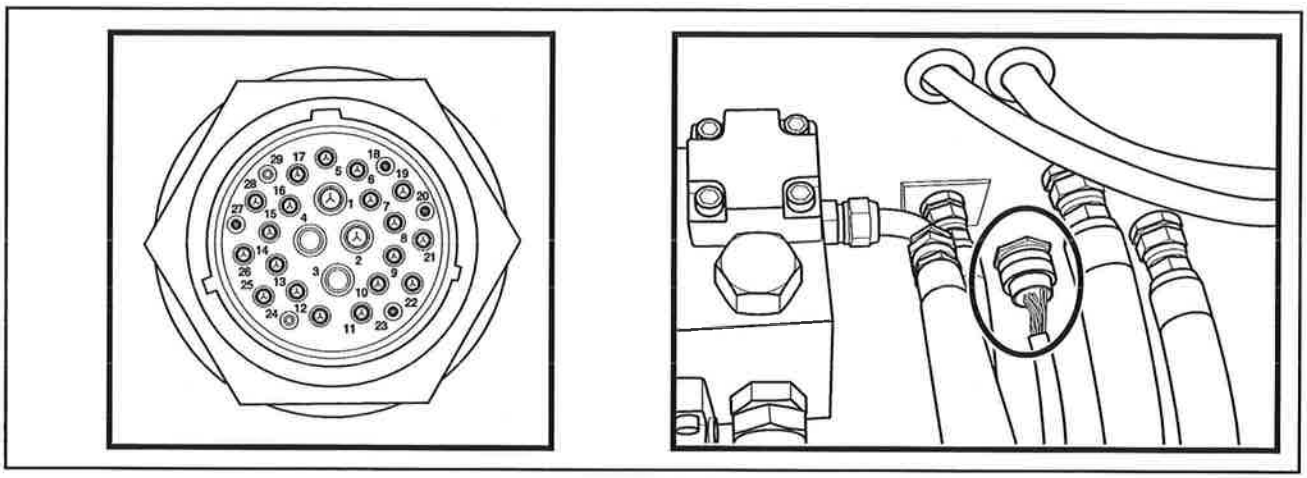

52

	CAVITY	WIRE	LINKED TO CONNECTOR
Connector C010 - Rear connector, left side	1	7236 White	C203-3 (SCM 2)
	2	7227 White	C203-24 (SCM 2)
	3	7228 Gray	C203-25 (SCM 2)
	4	7229 White	C203-2 (SCM 2)
	5	7230 White	C203-6 (SCM 2)
	6	7231 Gray	C203-8 (SCM 2)
	7	7232 White	C203-4 (SCM 2)
	8	7233 Gray	C203-5 (SCM 2)
	9	7234 White	C203-21 (SCM 2)
	10	7235 Gray	C203-1 (SCM 2)
	11	8099 Yellow	C203-18 (SCM 2)
	12	7237 Purple	C405-17
	13	7238 White	C406-13
	14	7165 White	C202-6 (SCM 2)
	15	8088 Blue	C202-20 (SCM 2)
	16	9219 Black	C284-7 (Ground)
	17	9218 Black	C284-1 (Ground)
	18	5041 Green	C406-8
	19	5040 Yellow	C406-6
	20	2065 Orange	C406-15
	21	7239 Purple	C406-22
	22	7240 Purple	C405-1
	23	7241 Purple	C405-2
	24	7242 Purple	C406-10
	25	7243 Purple	C406-9

IVECO C9 ENGINE HARNESS (84253507) (Continued)

Located in the fuse board

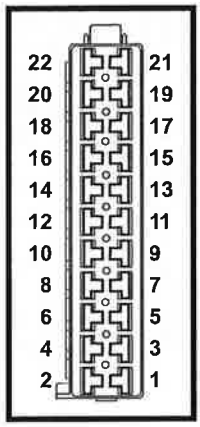

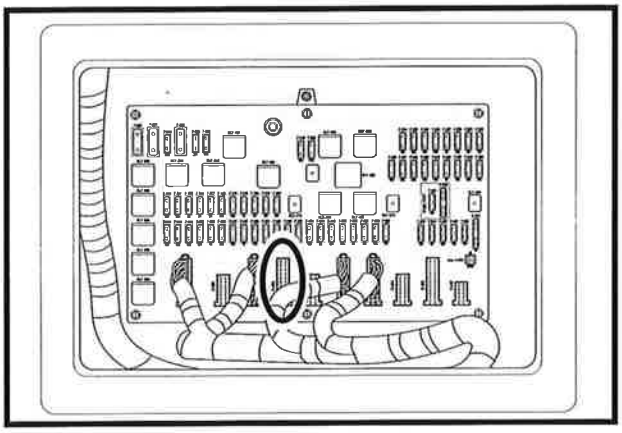

53

	CAVITY	WIRE	LINKED TO CONNECTOR
Connector C406 - Printed circuit board	1	8053 Yellow	C-067-B (SW029)
	4	4029 Green	C418-34
	6	5040 Yellow	C010-19
	7	2081 Orange	C418-40 / C006-27
	8	5041 Green	C010-18
	9	7243 Purple	C010-25
	10	7242 Purple	C010-24
	12	4028 Yellow	C418-35
	13	7238 White	C010-13
	14	2036 Pink	C067-A (SW029)
	15	2065 Orange	C010-20
	16	3026 Orange	C203-26
	17	3020 Orange	C102-9
	18	7246 White	C050-2 (SW-012)
	19	3022 Orange	C102-3
	20	3027 Orange	C202-3
	21	3025 Orange	C202-9
	22	7239 Purple	C010-21

IVECO C9 ENGINE HARNESS (84253507) (Continued)

Located under printed circuit board

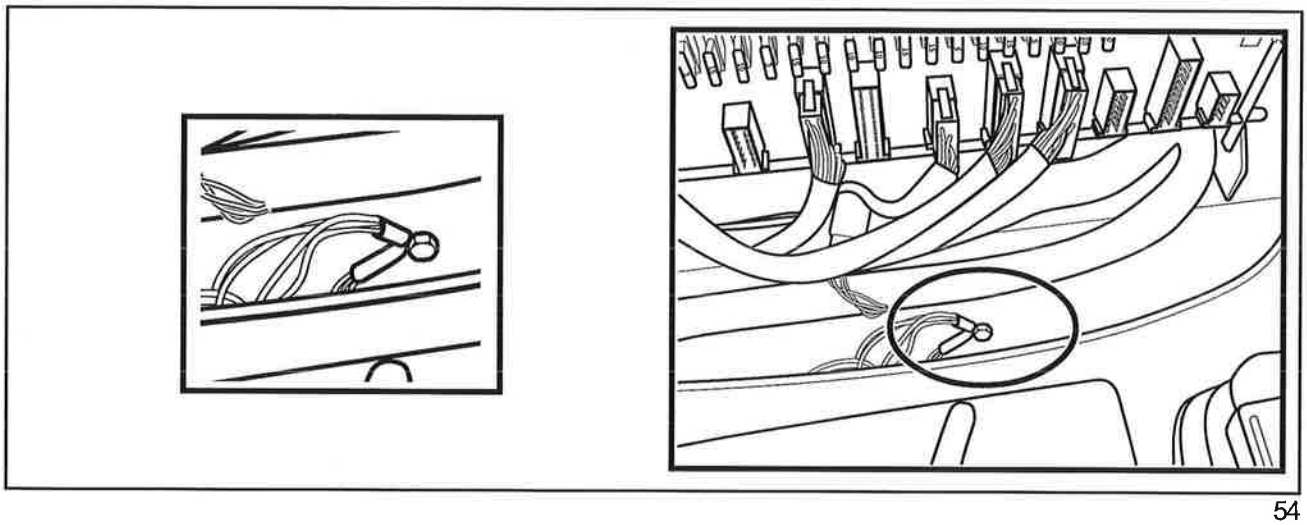

54

	CAVITY	WIRE	LINKED TO CONNECTOR
Connector C281 - Ground	1	9017 Black	C202-12 (SCM 2)
	2	9018 Black	C202-16 (SCM 2)
	3	9020 Black	C203-12 (SCM 2)
	4	9014 Black	C102-32
	5	9019 Black	C202-18 (SCM 2)
	6	9012 Black	C102-12
	7	9013 Black	C102-31
	8	9040 Black	C203-16 (SCM 2)
	9	9041 Black	C202-11 (SCM 2)
	10	9042 Black	C203-9 (SCM 2)
	11	9037 Black	C102-11
	12	9043 Black	C203-10 (SCM 2)

IVECO C9 ENGINE HARNESS (84253507) (Continued)

Located engine rear side next to the starter

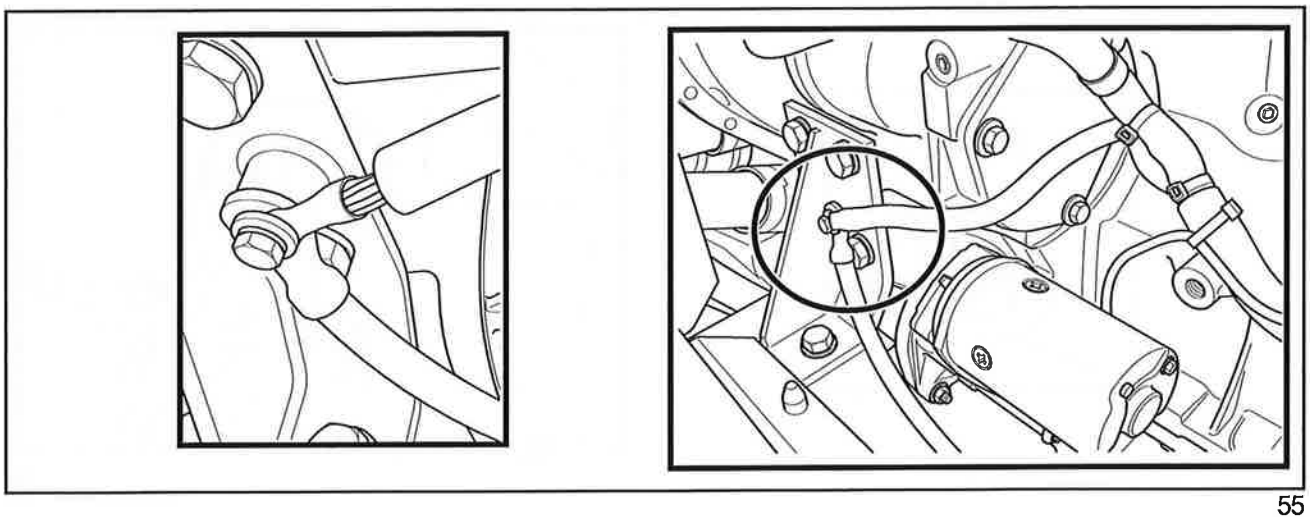

55

	CAVITY	WIRE	LINKED TO CONNECTOR
Connector C284 - Ground	1	9018 Black	C202-16 (SCM 2)
	2	9205 Blue	C008-K
	3	9126 Blue	C070-1
	4	9110 Black	C217-1
	5	9207 Black	C008-J
	6	9203 Black	C007-8
	7	9219 Blue	C010-16
	8	9008 Black	C418-10
	9	9125 Blue	C065-2
	10	9006 Black	C418-5
	11	9007 Black	C418-6
	12	9009 Black	C418-11
	13	9114 Blue	C171-1
	14	9138 Blue	C183-A
	15	9068 Black	C216-B
	16	9038 Black	C220-2

IVECO C9 ENGINE HARNESS (84253507) (Continued)

Located in the engine diesel filter

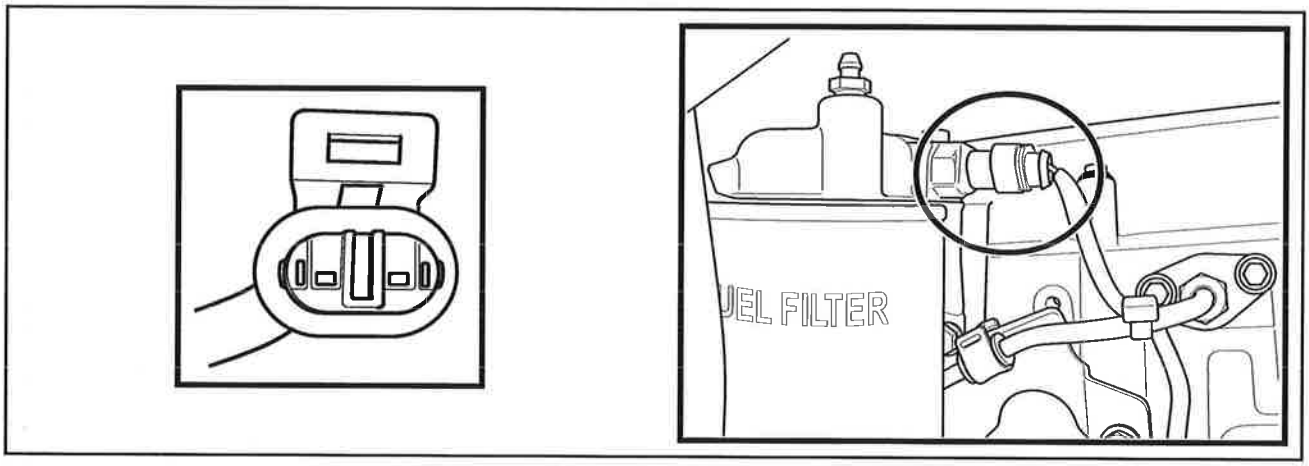

56

	CAVITY	WIRE	LINKED TO CONNECTOR
Connector C065 - Fuel filter switch	1 2	8049 Yellow 9125 Blue	C202-38 (SCM 2) C284-9

Located in the air filter, left side

57

	CAVITY	WIRE	LINKED TO CONNECTOR
Connector C070 - Air filter switch de ar	1	9126 Blue	C284-3
Connector C068 - Air filter switch	1	8055 Yellow	C202-36 (SCM 2)

IVECO C9 ENGINE HARNESS (84253507) (Continued)

Located in tge starter, engine rear side

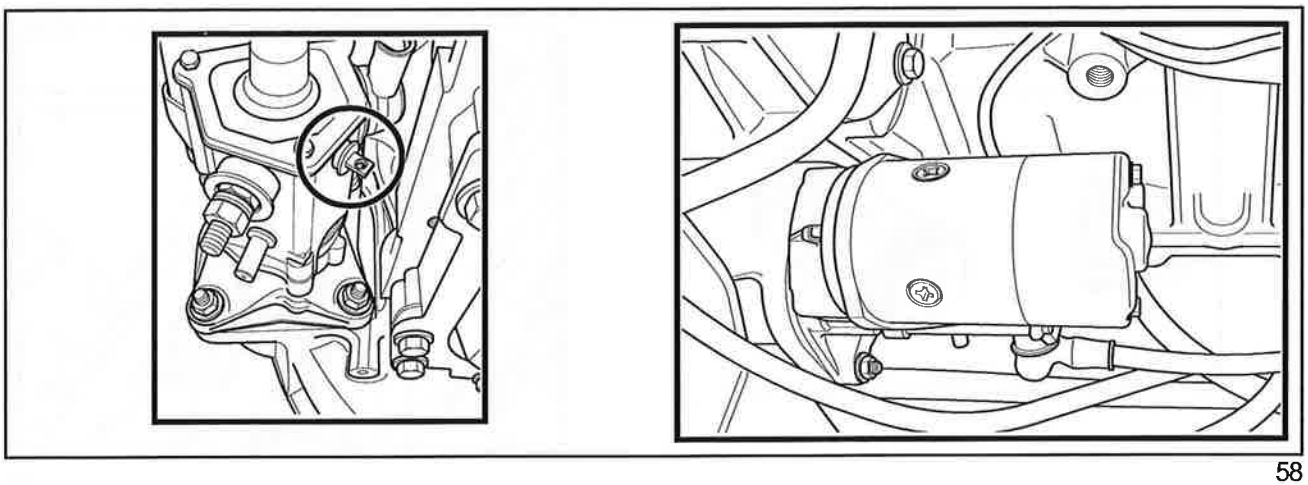

58

	CAVITY	WIRE	LINKED TO CONNECTOR
Connector C414 - Starter	50	7002 White	C006-1

Located fan drive block, right side

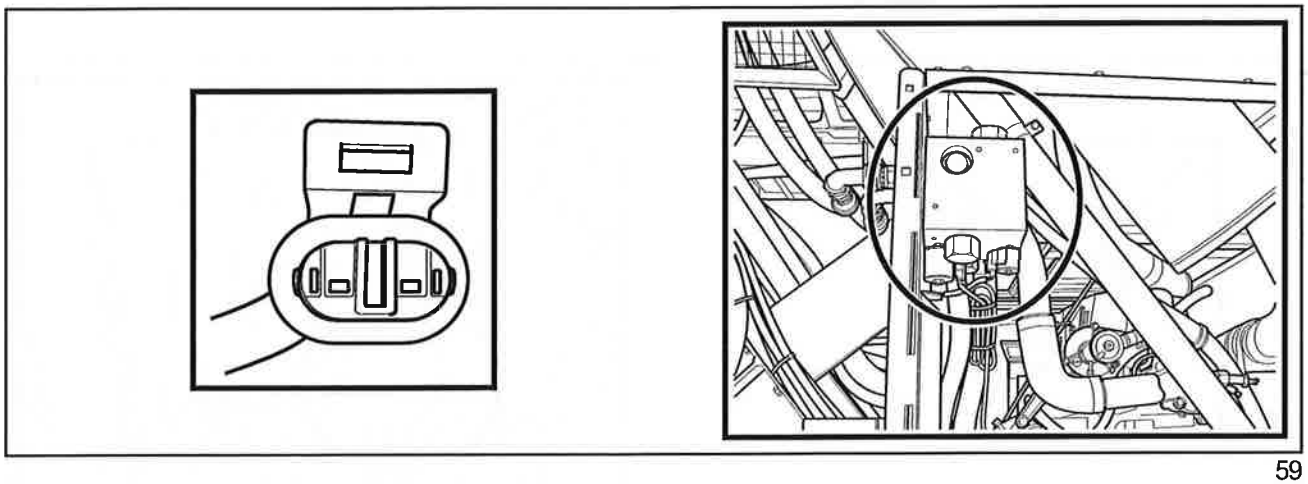

59

	CAVITY	WIRE	LINKED TO CONNECTOR
Connector C220 - Reverse fan valve	1 2	7129 White 9038 Black	C202-30 (SCM 2) C284-16 (Ground)

IVECO C9 ENGINE HARNESS (84253507) (Continued)

Located fan drive block, right side

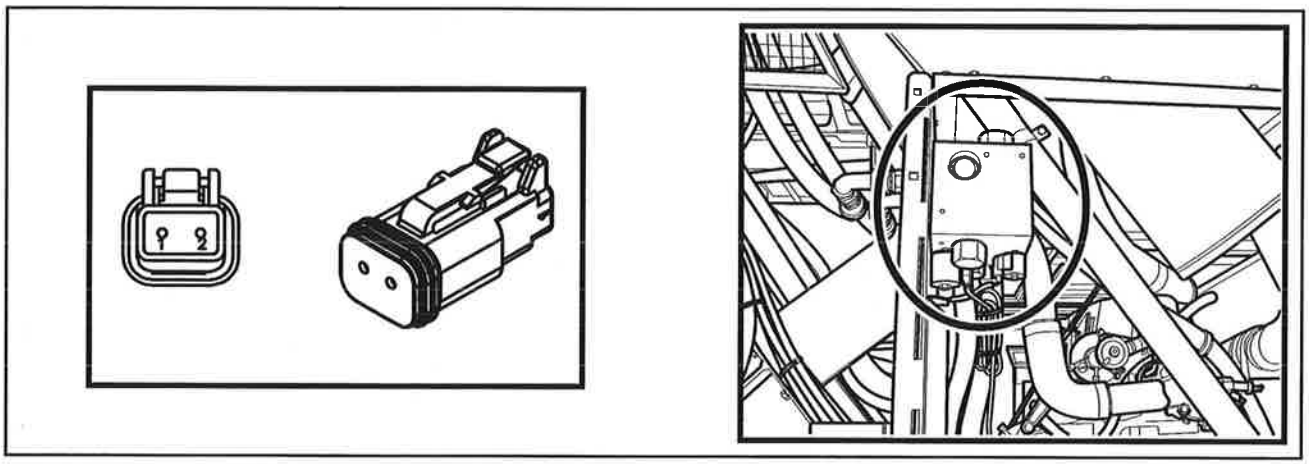

60

	CAVITY	WIRE	LINKED TO CONNECTOR
Connector C159 DEUTSCH - Engine fan proportional valve	1 2	7224 Whhite 8070 Blue	C202-7 (SCM 2) C202-39 (SCM 2)

Located in the alternator

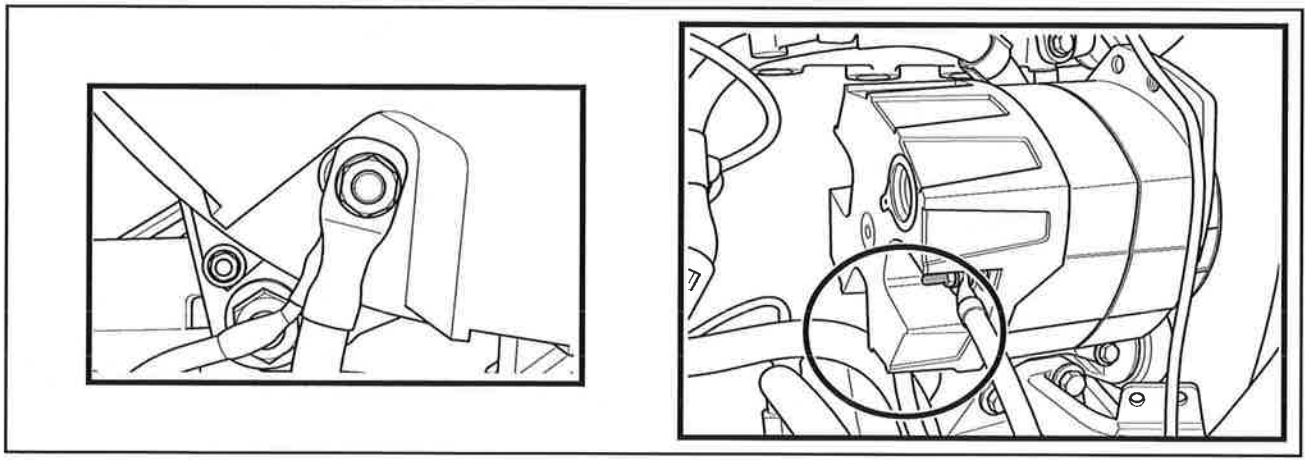

61

	CAVITY	WIRE	LINKED TO CONNECTOR
Terminal - Alternator	1	1006 Red	Fuse (Pin 1)

IVECO C9 ENGINE HARNESS (84253507) (Continued)

Located in the engine compartment, right side

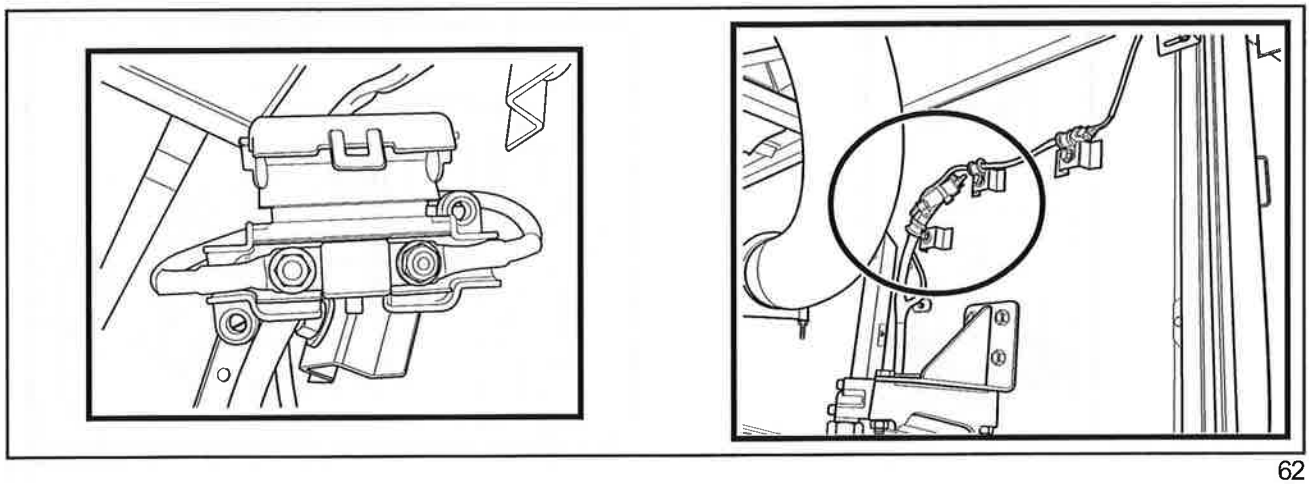

62

	CAVITY	WIRE	LINKED TO CONNECTOR
ECU fuse terminal	1	1006 Red	Alternator for fuse (Pin 1)
	2	1007 Red	Fuse (Pin 2) for C418-2 / C418-3 / C418-8 / C418-9

FRONT HARNESS (87733453)

Located in the side trim knife block - chassis' left side

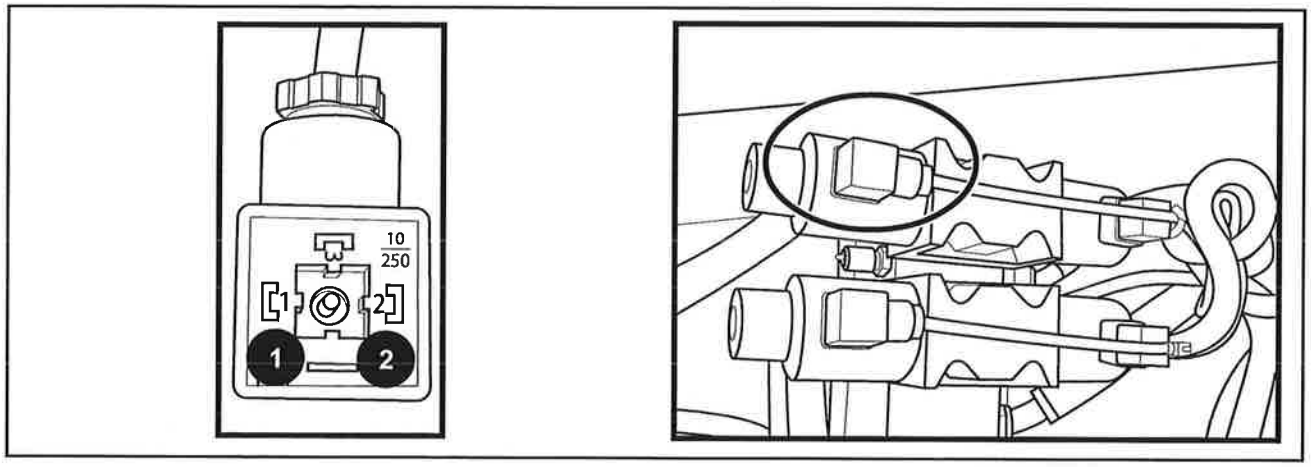

63

	CAVITY	WIRE	LINKED TO CONNECTOR
Connector C250 - Side trim knife rotation - harvest direction, left side	1 2	9173 Black 7157 White	C303 - 1 (SCM 3) C283 (Ground)
Connector C251 - Side trim knife rotation - reverse direction, left side	1 2	9174 Black 7158 Gray	C283 (Ground) C303-2 (SCM 3)
Connector C252 - Side trim knife rotation - harvest direction, right side	1 2	9175 Black 7159 White	C283 (Ground) C303-24 (SCM3)
Connector C253 - Side trim knife rotation - reverse direction, right side	1 2	9176 Black 7160 Gray	C283 (Ground) C303-25 (SCM 3)

Located together with the auto-tracker cylinder - chassis' left side

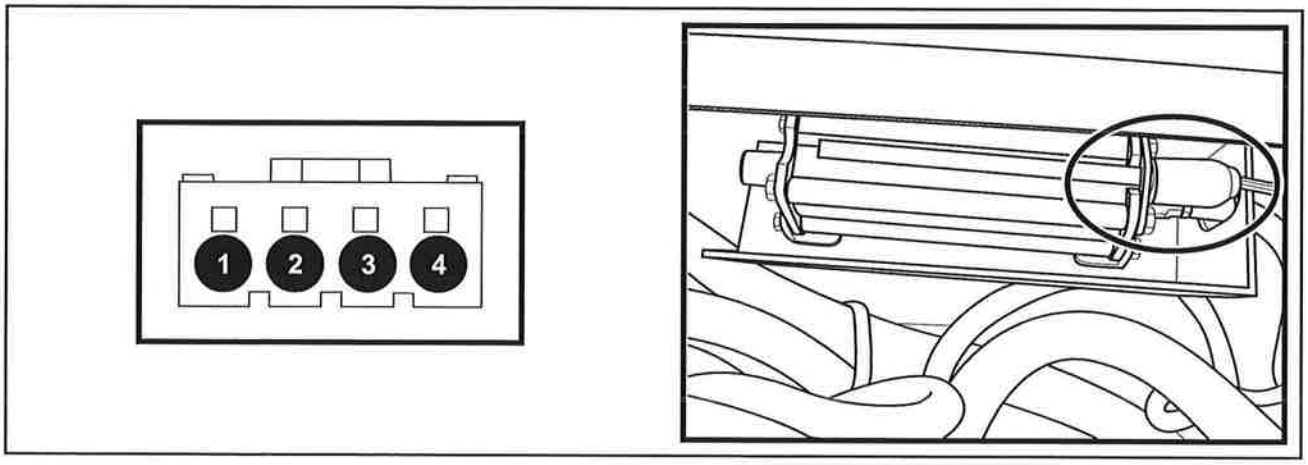

64

	CAVITY	WIRE	LINKED TO CONNECTOR
Connector C178 - Basecutter height (SEN 014)	1 2 3	9133 Black 8064 Yellow 2046 Pink	C281 (Ground) C108-28 (SCM 1) C103-11 (SCM 1)

FRONT HARNESS (87733453) (continued)

Located next to the motor M51 - chassis' left side

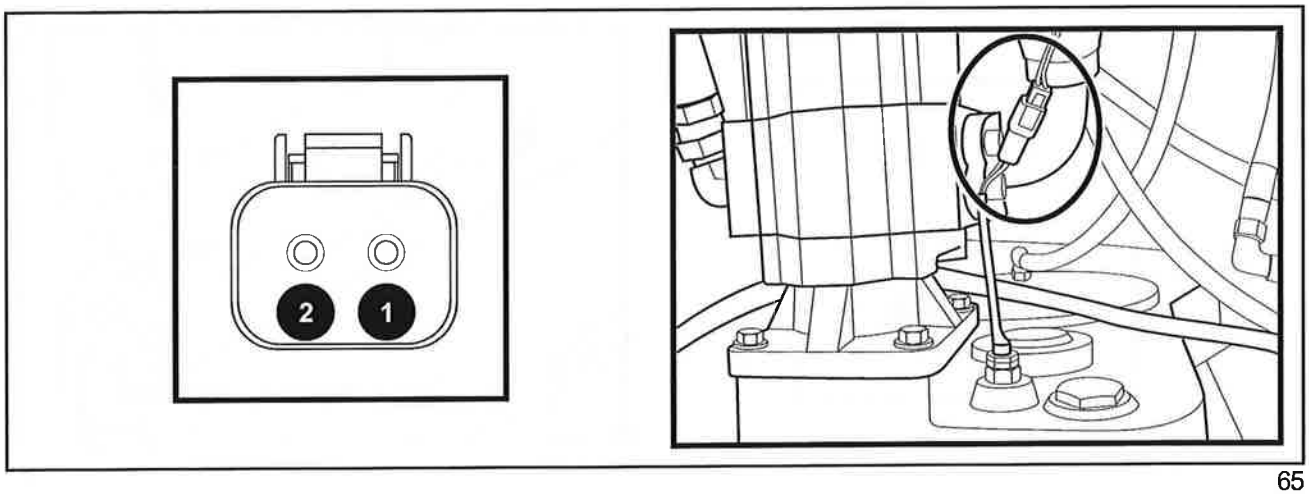

65

	CAVITY	WIRE	LINKED TO CONNECTOR
Connector C177 - Basecutter speed sensor	1 2	9132 Blue 8062 Yellow	C283 (Ground) C404-10

Located in the basecutter block - chassis' left side

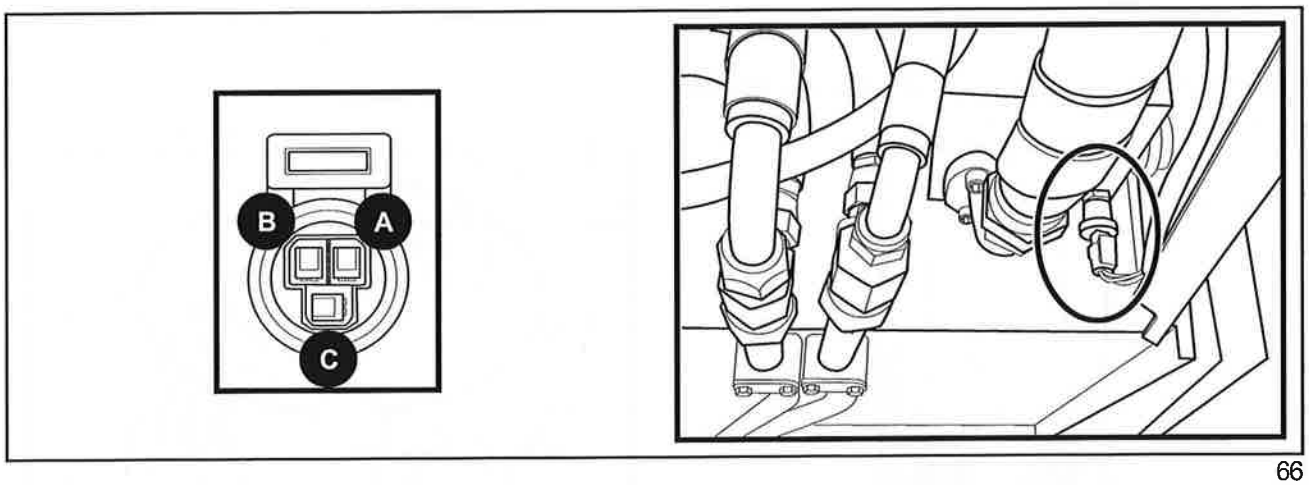

66

	CAVITY	WIRE	LINKED TO CONNECTOR
Connector C179 - Basecutter pressure sensor (SEN - 015)	A B C	9134 Blue 2047 Pink 8065 Yellow	C283 (Ground) C103-11 (SCM 1) C 103-33 (SCM 1)

FRONT HARNESS (87733453) (continued)

Located in the diesel tank upper side

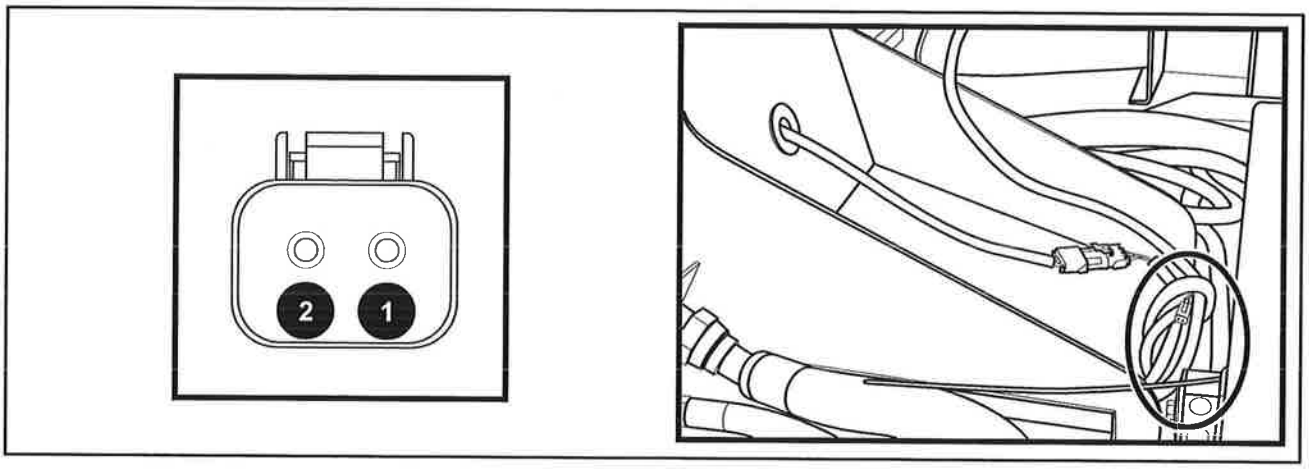

67

	CAVITY	WIRE	LINKED TO CONNECTOR
Connector C192 - Brake pedal sensor, left side (SEN - 031)	1 2	9115 Blue 8089 Yellow	C283 (Ground) C103-37 (SCM 1)
Connector C193 - Brake pedal sensor, right side (SEN - 032)	1 2	9200 Blue 8090 Yellow	C283 (Ground) C103-36 (SCM 1)

Located in the basecutter block - chassis' left side

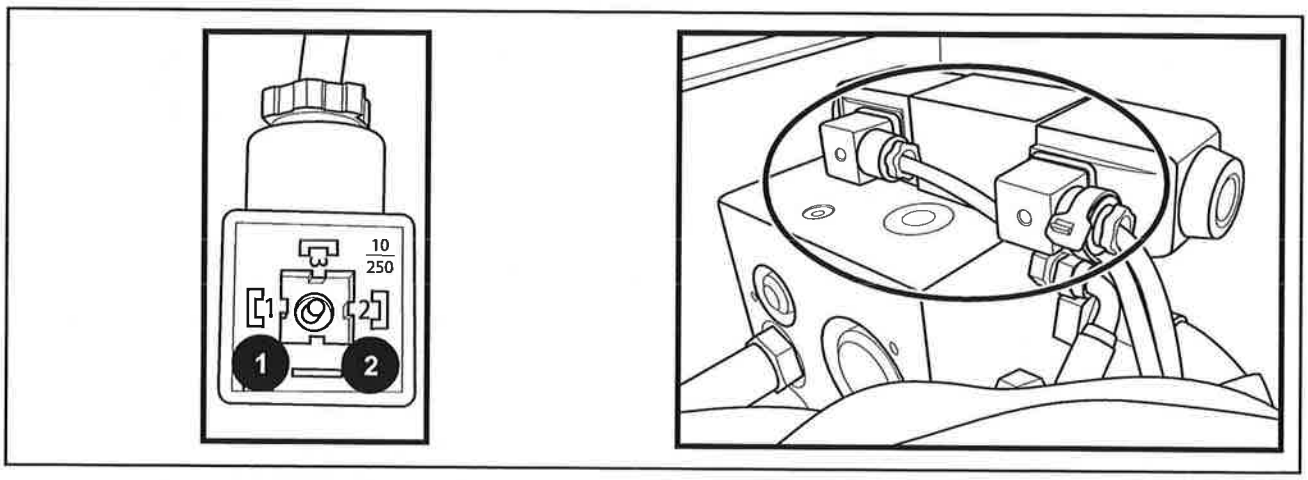

68

	CAVITY	WIRE	LINKED TO CONNECTOR
Connector C255 - Chopper /basecutter rotation - reverse direction (SOL - 046)	1 2	9178 Black 7164 Gray	C283 (Ground) C404-6
Connector C254 - Chopper /basecutter rotation - harvest direction (SOL - 045)	1 2	9177 Black 7162 White	C283 (Ground) C404-5

FRONT HARNESS (87733453) (continued)

Located in the diesel tank upper side

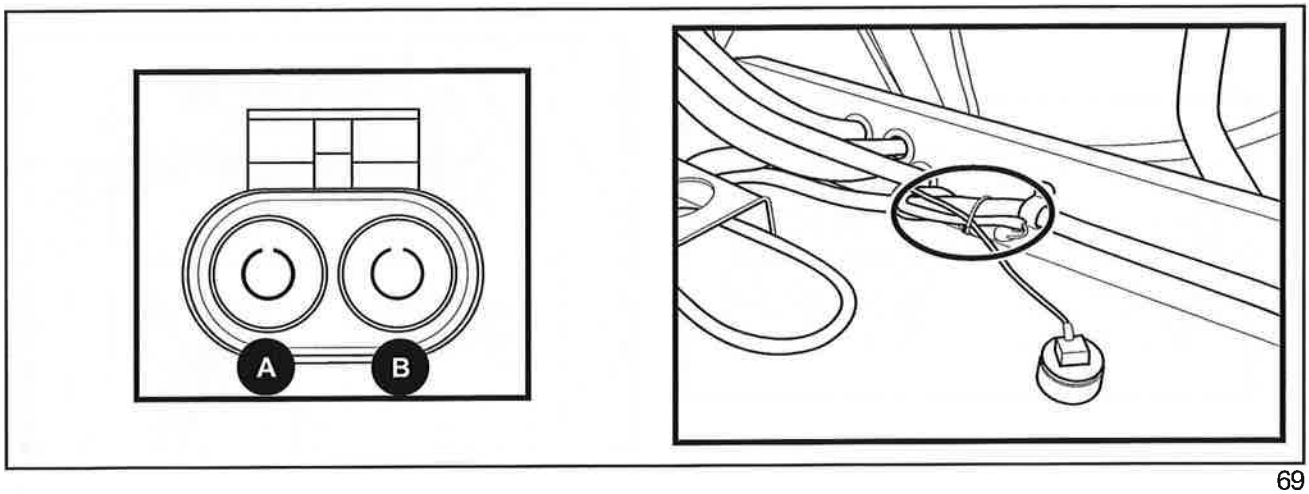

69

	CAVITY	WIRE	LINKED TO CONNECTOR
Connector C170 - Fuel level sensor (SEN - 006)	A B	8048 Yellow 9124 Black	C103-34 (SCM 1) C283 (Ground)

	CAVITY	WIRE	LINKED TO CONNECTOR
Connector C 002 - Front road lights F E D C B A	A	7101 Purple	C409-14
	B	7102 Purple	C409-14 / C406-9
	C	7103 Purple	C409-16
	D	7104 Purple	C409-4
	E	7105 Purple	C403-4 / C103-20 (SCM1)
	F	7106 Purple	C403-6 / C103-40 (SCM1)

Located in the water reservoir - under the cabin

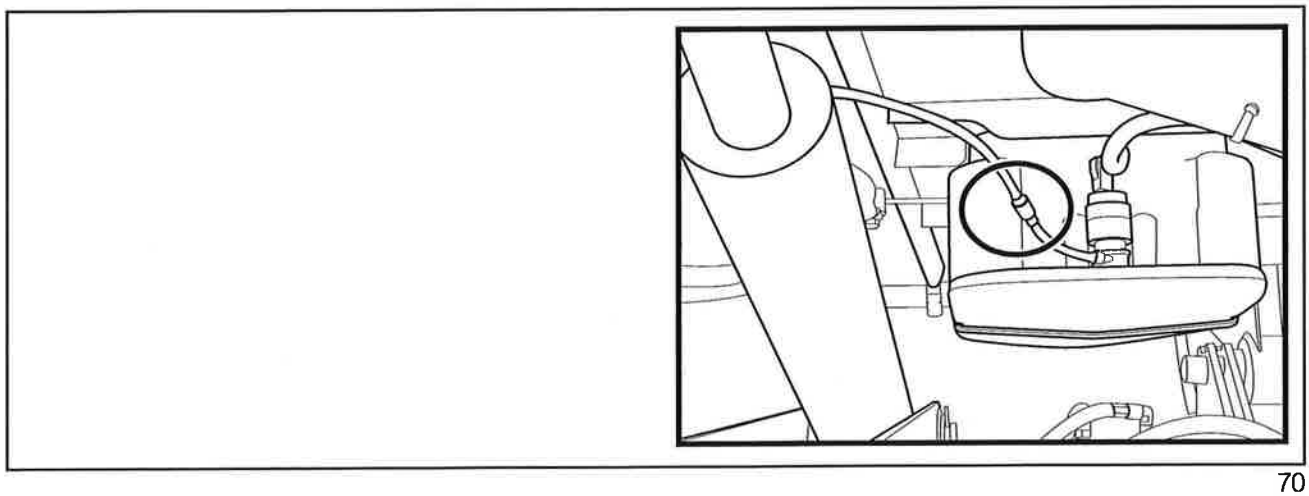

70

	CAVITY	WIRE	LINKED TO CONNECTOR
Connector C156 - Windshield water "jet" (washer) motor (M007)	1 2	7042 Purple 9063 Black	C403-8 C283 (Ground)

FRONT HARNESS (87733453) (continued)

Located in the module - operator's right side

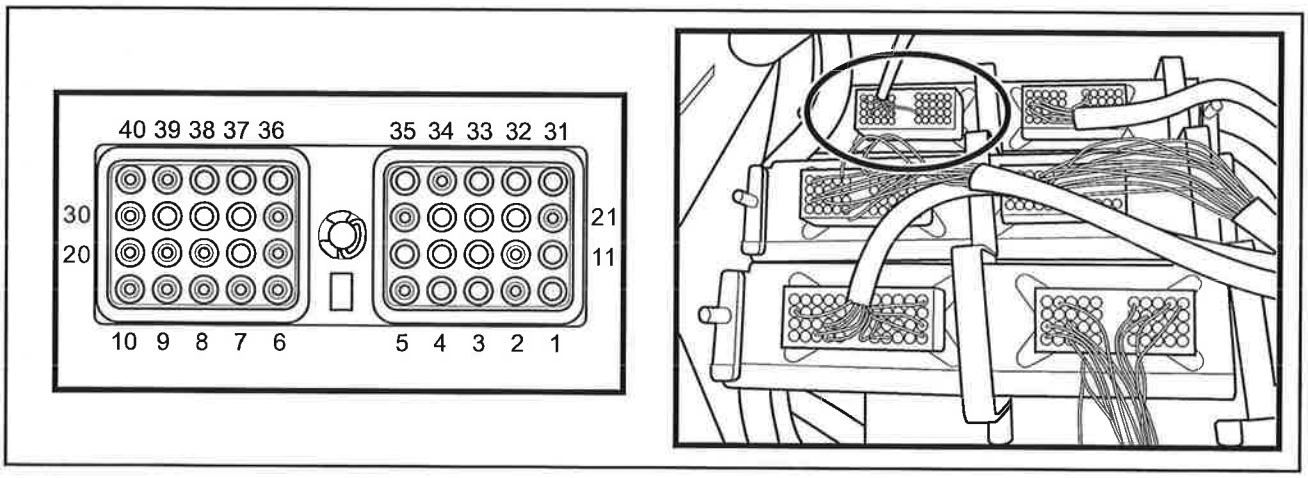

71

	CAVITY	WIRE	LINKED TO CONNECTOR
Connector C303 - Module SCM 3	1	7157 White	C250-2
	2	7158 Gray	C251-2
	22	9025 Black	C283 (Ground)
	24	7159 White	C252-2
	25	7160 Gray	C253-2
	26	3031 Orange	C403-14

FRONT HARNESS (87733453) (continued)

Located in the module - operator's right side

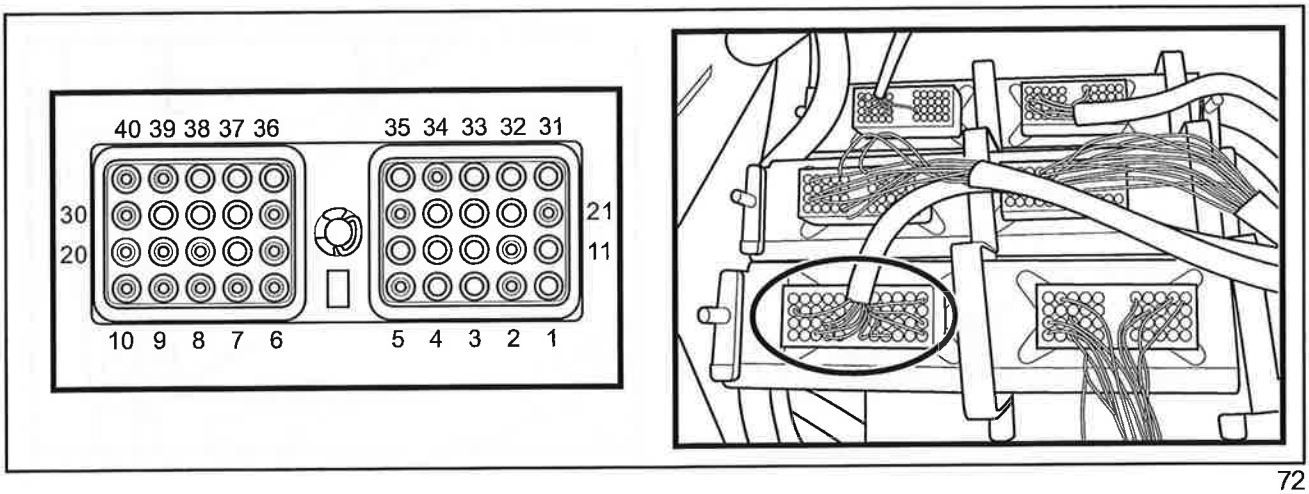

72

	CAVITY	WIRE	LINKED TO CONNECTOR
Connector C103 - Module SCM 1	10	9039 Black	C283 (Ground)
	11	2045 Purple	C179-B / C178-3
	20	7112 Purple	C403-4 / C002-B
	22	9028 Black	Grounding
	24	7167 White	C020-C
	25	7169 Gray	C020-A
	26	3021 Orange	C403-7
	28	8064A Yellow	C178-2
	30	1025 Red	C404-13
	33	8065 Yellow	C179-C
	34	8048 Yellow	C170-A
	36	8090 Yellow	C193-2
	37	8089 Yellow	C192-2
	40	7114 Purple	C403-6

FRONT HARNESS (87733453) (continued)

Located next to the diesel tank upper side

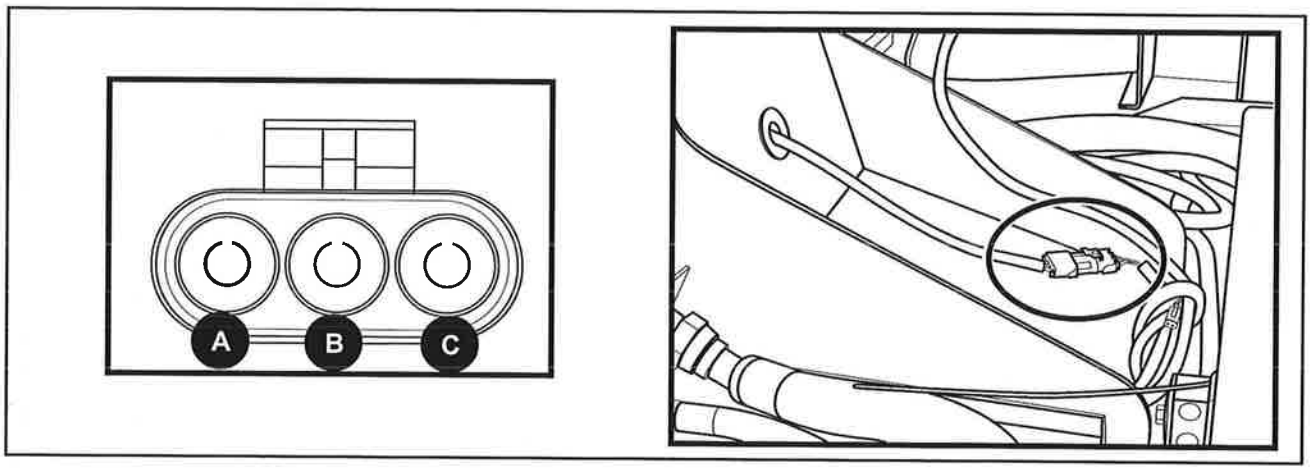

73

	CAVITY	WIRE	LINKED TO CONNECTOR
Connector C020 - Topper slew	A B C	7169 Gray 9228 Black 7167 White	C103-25 C 283 (Ground) C009-C

Located in the fuse board

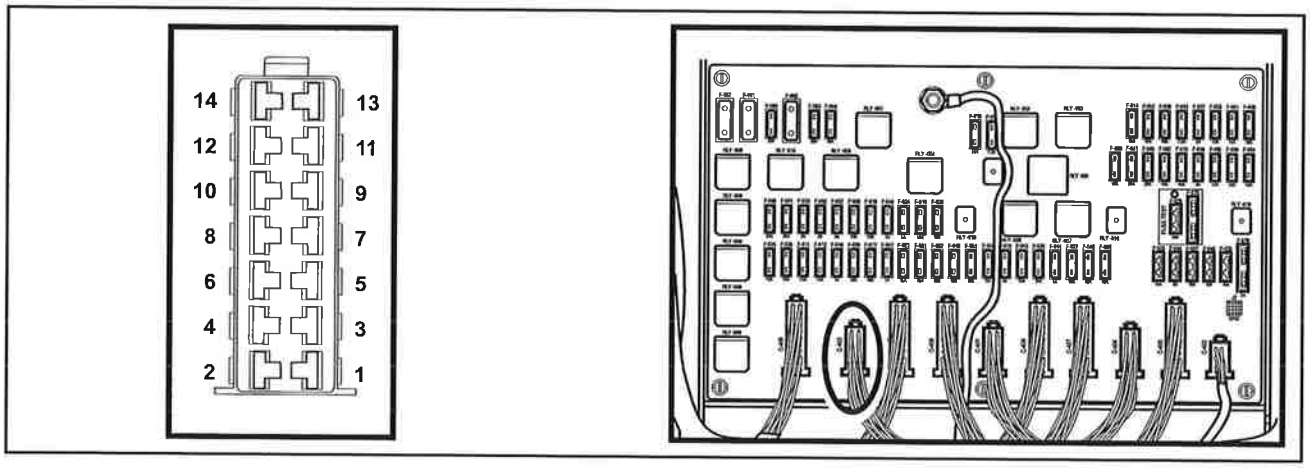

74

	CAVITY	WIRE	LINKED TO CONNECTOR
Connector C403 - Fuse board	4	7197 Purple	C103-20 (SCM 1) C002-B
	6	7198 Purple	C103-40 (SCM 1) / C002-C
	7	3021 Orange	C103-26 (SCM 1)
	8	7042 Purple	C156-1
	9	7103 Purple	C002-E
	11	7101 Purple	C002-A
	12	7102 Purple	C002-D
	13	7104 Purple	C002-F
	14	3031 Orange	C303-26 (SCM 3)

FRONT HARNESS (87733453) (continued)

Located in the fuse board

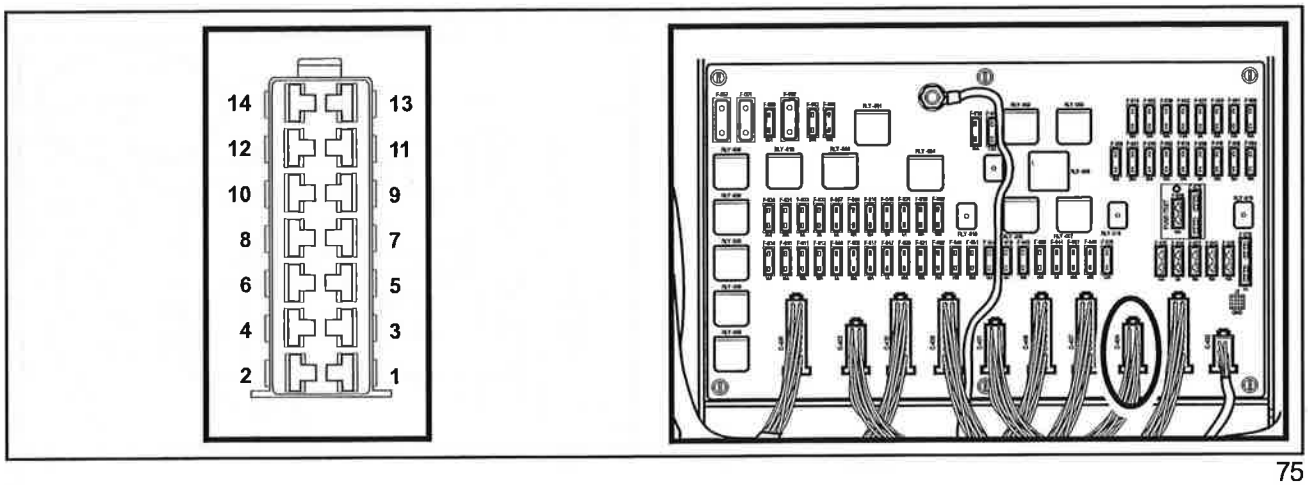

75

	CAVITY	WIRE	LINKED TO CONNECTOR
Connector C404 - Fuse board	5	7162 White	C405-7
	6	7164 Gray	C405-5
	9	8062 Yellow	C405-14
	13	1025 Red	C103-30 (SCM 1)

FRONT HARNESS (87733453) (continued)

Located on chassis, left side - next to the side trim knife control

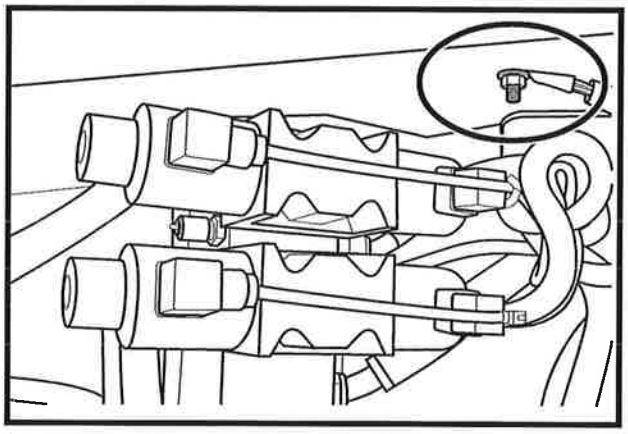

76

	CAVITY	WIRE	LINKED TO CONNECTOR
Connector C283 - Grouding 3	1	9173 Black	C250-1
	2	9174 Black	C251-1
	3	9175 Black	C252-1
	4	9176 Black	C253-1
	5	9177 Black	C254-1
	6	9178 Black	C255-1
	7	9134 Blue	C179-A
	8	9132 Blue	C177-1
	9	9038 Black	C284 (Ground) Engine compartment

FRONT HARNESS (87733453) (continued)

Located on the engine's front side with access underneath the cab

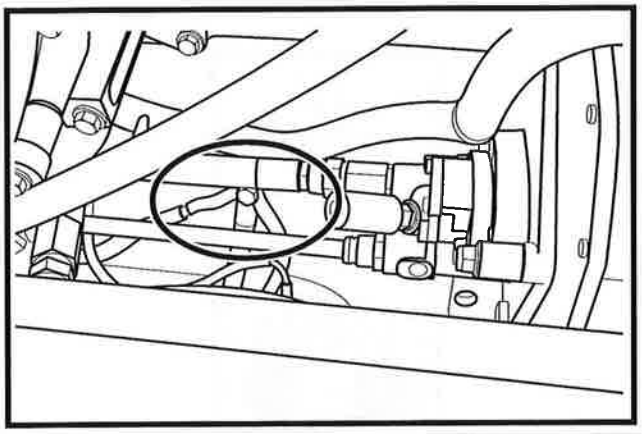

77

	CAVITY	WIRE	LINKED TO CONNECTOR
Connector C284 - Grouding 4	1	9036 Black	C094 (Ground) Chassis underneath the cab
	2	9063 Black	C283 (Ground)
	3	9228 Black	C283 (Ground)
	4	9124 Blue	C283 (Ground)
	5	9115 Blue	C283 (Ground)
	6	9038 Black	C284 (Ground) Engine compartment

Located under the printed circuit board

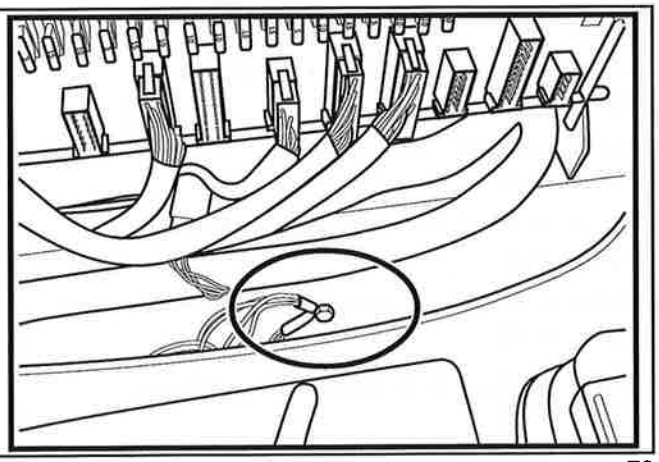

78

	CAVITY	WIRE	LINKED TO CONNECTOR
Connector C281 - Grouding 1	1	9025 Black	C283 (Ground)
	2	9039 Black	C283 (Ground)
	3	9015 Black	C281 (Ground)
	4	9036 Black	C094 (Ground) Chassis underneath the cab

AUXILIARY BLOCK HARNESS (87733456)

Auxiliary block, located in the chassis' right side, under the roof

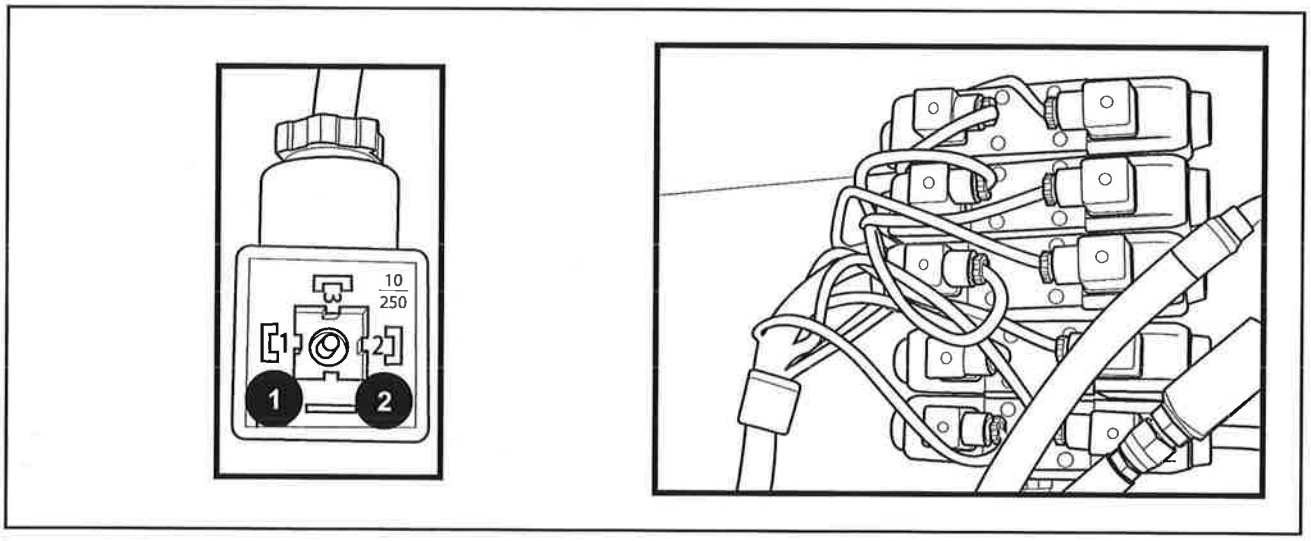

79

	CAVITY	WIRE	LINKED TO CONNECTOR
C238 - Knock down roller up (SOL - 029)	1 2	9161 Black 7145 White	C287 (Ground) C302-1 (SCM 3)
C239 - Knock down roller down (SOL - 030)	1 2	9162 Black 7146 Gray	C287 (Ground) C302-21 (SCM 3)
C240 - Cropdivider tilt in, left side (SOL - 31)	1 2	9163 Black 7147 White	C287 (Ground) C302-37 (SCM 3)
C241 - Cropdivider tilt out, left side (SOL - 32)	1 2	9164 Black 7148 Gray	C287 (Ground) C302-19 (SCM 3)
C242 - Cropdivider tilt in, right side (SOL - 33)	1 2	9165 Black 7149 White	C287 (Ground) C302-25 (SCM 3)
C243 - Cropdivider tilt out, right side (SOL - 34)	1 2	9166 Black 7150 Gray	C287 (Ground) C302-30 (SCM 3)
C244 - Extend side trim knife, left side (SOL - 035)	1 2	9167 Black 7151 White	C287 (Ground) C302-15 (SCM 3)
C245 - Retract side trim knife, left side (SOL - 036)	1 2	9168 Black 7152 Gray	C287 (Ground) C302-13 (SCM 3)
C246 - Extend side trim knife, right side (SOL - 037)	1 2	9169 Black 7153 White	C287 (Ground) C302-5 (SCM 3)
C247 - Retract side trim knife, right side (SOL - 038)	1 2	9170 Black 7154 Gray	C287 (Ground) C302-4 (SCM 3)
C248 - Increase basecutter tilting (SOL - 039)	1 2	9171 Black 7155 White	C287 (Ground) C302-25 (SCM 3)
C249 - Decrease basecutter tilting (SOL - 040)	1 2	9172 Black 7156 White	C287 (Ground) C302-6 (SCM 3)

AUXILIARY BLOCK HARNESS (87733456) (Continued)

Module located in the operator's seat, right side

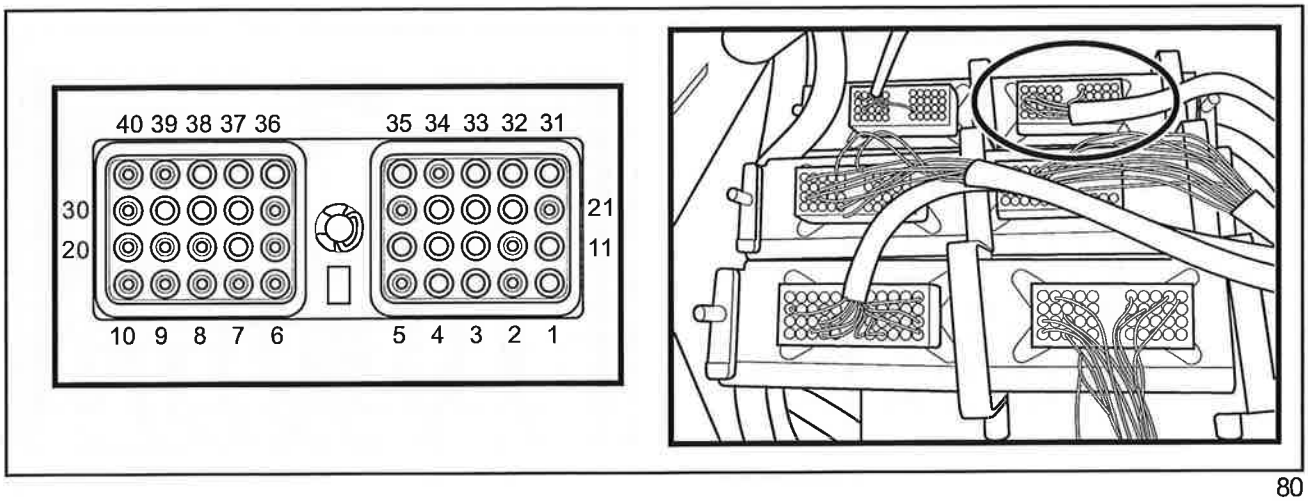

80

	CAVITY	WIRE	LINKED TO CONNECTOR
C302 - Connector linked to SCM 3	1	7145 White	C238-2
	2	1034 Red	C402-8
	3	3032 Orange	C402-10
	4	7154 Gray	C247-2
	5	7153 White	C246-2
	6	7156 Gray	C249-2
	9	3030 Orange	C402-9
	11	9045 Black	C287 (Ground)
	12	9022 Black	C287 (Ground)
	13	7152 Gray	C245-2
	15	7151 White	C244-2
	19	7148 Gray	C241-2
	21	7146 Gray	C239-2
	25	7149 White	C242-2
	26	7155 White	C248-2
	30	7150 Gray	C243-2
	31	9023 Black	C287 (Ground)
	32	9024 Black	C287 (Ground)
	37	7147 White	C240-2

AUXILIARY BLOCK HARNESS (87733456) (Continued)

Connector located in the fuse board, behind the operator's seat, right side

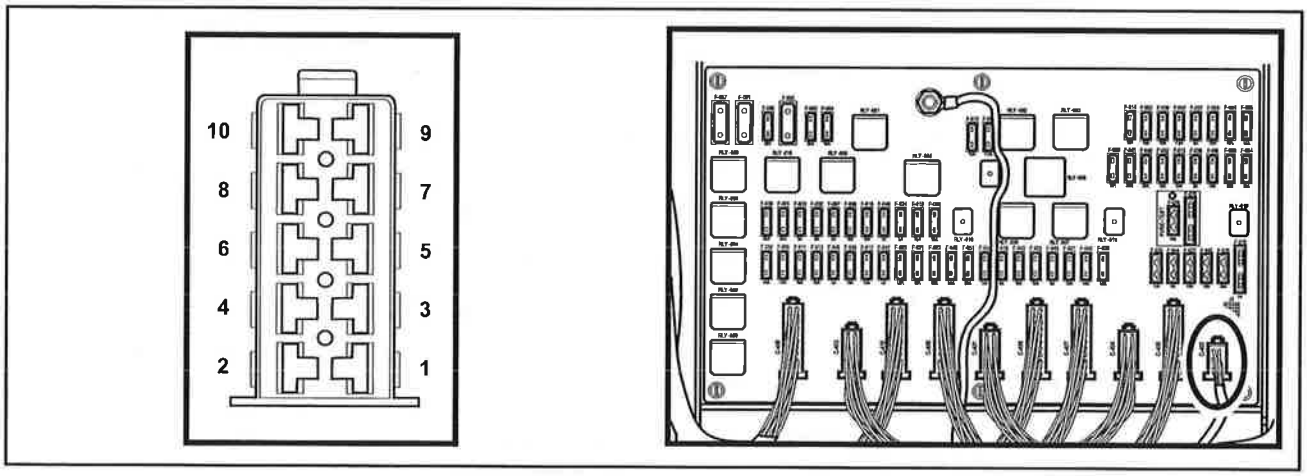

81

	CAVITY	WIRE	LINKED TO CONNECTOR
C402 - Auxiliary connector	8	1034 Red	Fuse 20 A (F-005)
	9	3030 Orange	Fuse 10 A (F-045)
	10	3032 Orange	Fuse 10 A (F-026)

ELEVATOR CONTROL HARNESS (87733446)

Elevator control, located in the elevator's upper side

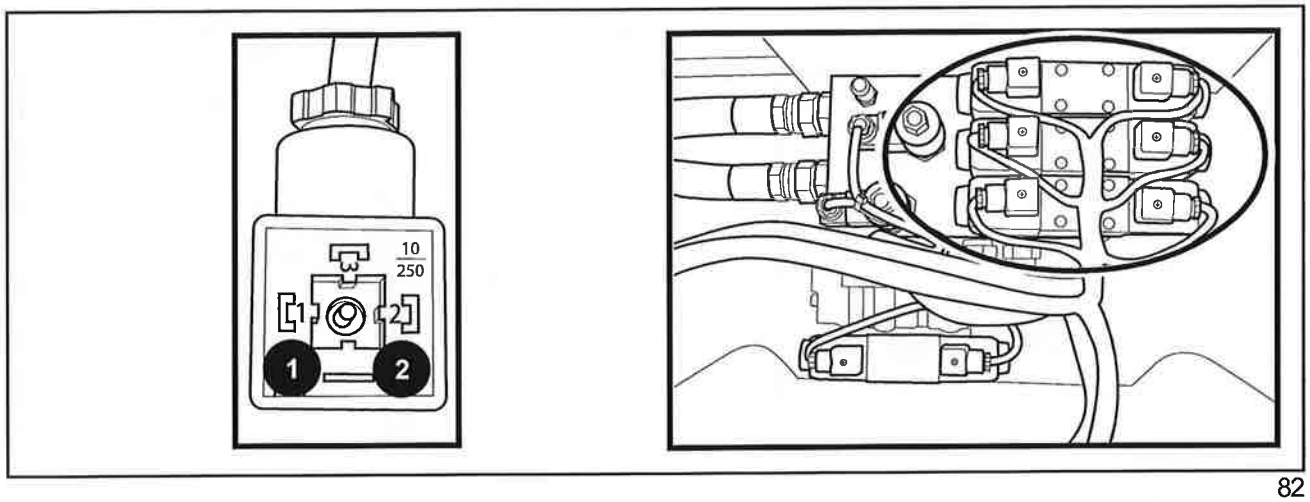

82

	CAVITY	WIRE	LINKED TO CONNECTOR
C259 - Elevator block pilot valve (SOL - 050)	1 2	9181 Black 7172 White	C286 (Ground) C005-1
C260 - Elevator conveyor - harvest direction (SOL - 051)	1 2	9182 Black 7174 White	C286 (Ground) C005-2
C261 - Elevator conveyor - reverse direction (SOL - 052)	1 2	9183 Black 7176 Gray	C286 (Ground) C005-3
C262 - Secondary extractor fan (SOL - 053)	1 2	9184 Black 7178 White	C286 (Ground) C005-4
C263 - Secondary extractor hood slew, left (SOL - 054)	1 2	9185 Black 7180 White	C286 (Ground) C005-5
C264 - Secondary extractor hood slew, right (SOL - 055)	1 2	9186 Black 7182 Gray	C286 (Ground) C005-6
C265 - Bin flap to inside (SOL - 056)	1 2	9187 Black 7184 White	C286 (Ground) C005-7
C266 - Bin flap to outside (SOL - 057)	1 2	9188 Black 7186 Gray	C286 (Ground) C005-8
C267 - Elevator raise (SOL - 058)	1 2	9189 Black 7188 White	C286 (Ground) C005-9
C268 - Elevator lower (SOL - 059)	1 2	9190 Black 7190 Gray	C286 (Ground) C005-10

ELEVATOR CONTROL HARNESS (87733446) (Continued)

Elevator rear lamps, left and right sides

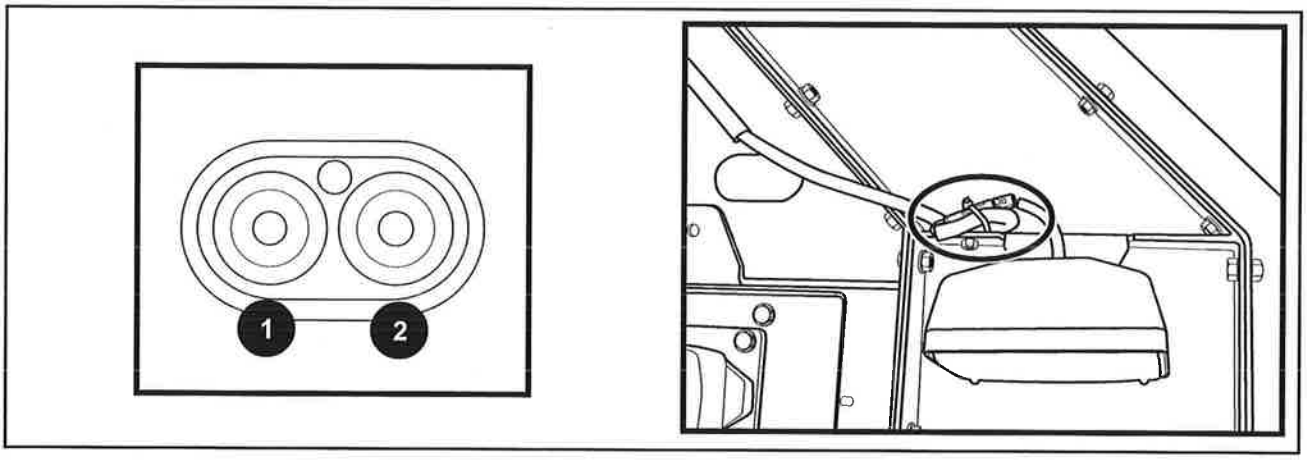

83

	CAVITY	WIRE	LINKED TO CONNECTOR
C127 - Elevator rear lights (LMP - 006)	1 2	7072 Purple 9075 Black	C005-11 C286 (Ground)
C126 - Elevator rear lights (LMP - 005)	1 2	7072 Purple 9075 Black	C005-11 C286 (Ground)

Connector and grounding point, located in the elevator upper side

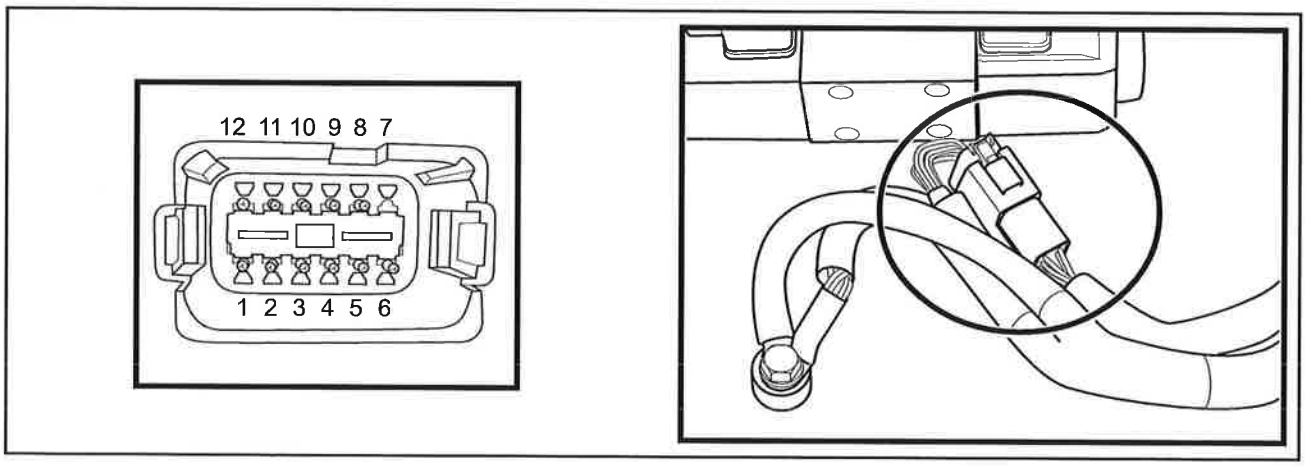

84

	CAVITY	WIRE	LINKED TO CONNECTOR
C005 - Elevator upper side connector	1	7171 White	C019-1
	2	7173 White	C019-2
	3	7175 Gray	C019-3
	4	7177 White	C019-4
	5	7179 White	C019-5
	6	7181 Gray	C019-6
	7	7183 Gray	C019-7
	8	7185 Gray	C019-8
	9	7187 White	C019-9
	10	7189 Gray	C019-10
	11	7071 Purple	C019-11

TOPPER HARNESS (87733454)

Topper control, located in the topper front part

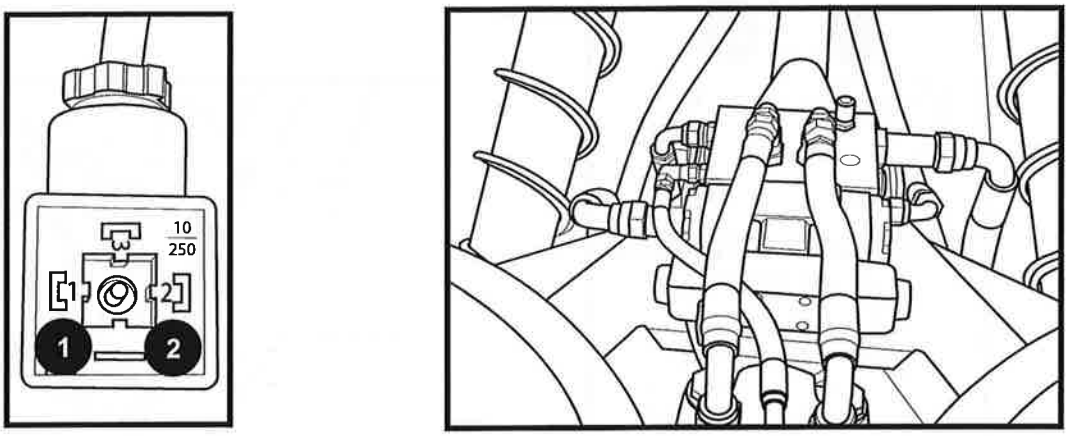

85

	CAVITY	WIRE	LINKED TO CONNECTOR
C257 - Topper, left side slew (SOL-048)	1 2	9211 Black 7265 Gray	C009 M-B C009 M-A
C258 - Topper, right side slew (SOL-049)	1 2	9211 Black 7264 White	C009 M-B C009 M-C

Topper connectors, located in the topper rear side

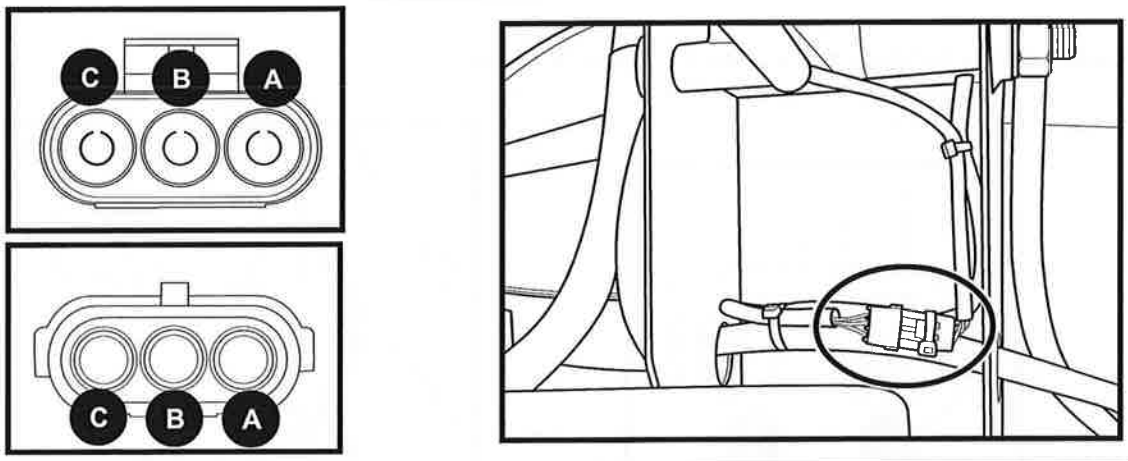

86

	CAVITY	WIRE	LINKED TO CONNECTOR
C020 - Topper arm connector	A B C	7169 Gray 9228 Black 7167 White	C103-25 (SCM 01) C283 (Ground) C103-24 (SCM 01)
C009F - Topper connector	A B C	7170 Gray 9212 Black 7168 White	C020-A C020-B C020-C

REAR LEFT SIDE HARNESS (87733451)

Switch, located in the hydraulic filter head (Suction)

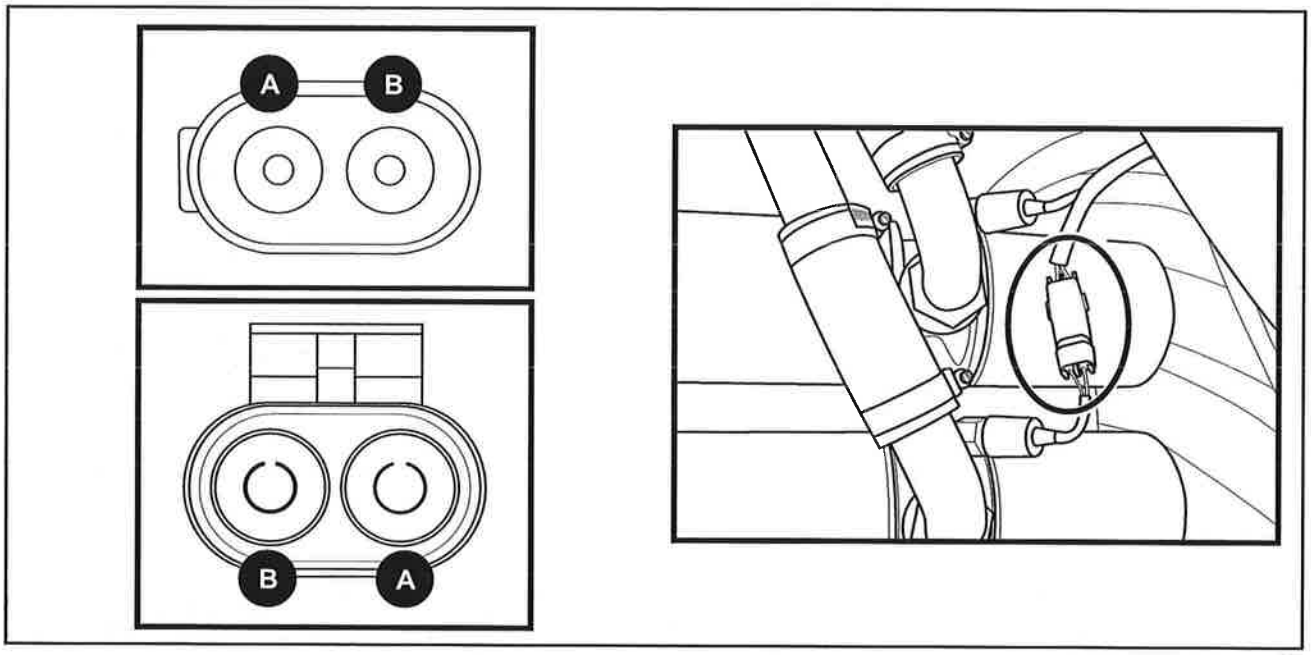

87

	CAVITY	WIRE	LINKED TO CONNECTOR
C062 - Oil filter restriction switch (Suction SW-024)	A B	8045 Yellow 8046 Yellow	C010-11 C063-A
C063 - Oil filter restriction switch (Suction SW-025)	A B	8046 Yellow 9122 Blue	C062-B C010-16

Reverse alarm, located in the chassis' upper left side

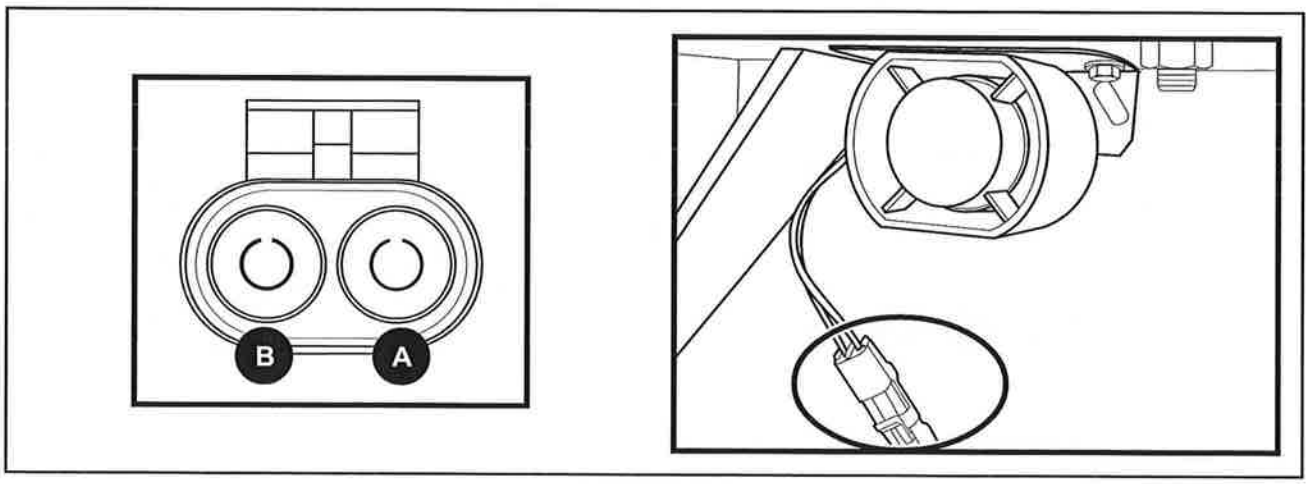

88

	CAVITY	WIRE	LINKED TO CONNECTOR
C038 - Reverse alarm (AUD - 004)	A B	7120 White 9109 Black	C010-13 C010-17

REAR HARNESS, LEFT SIDE (87733451) (Continued)

Solenoid located in the chassis' upper left side

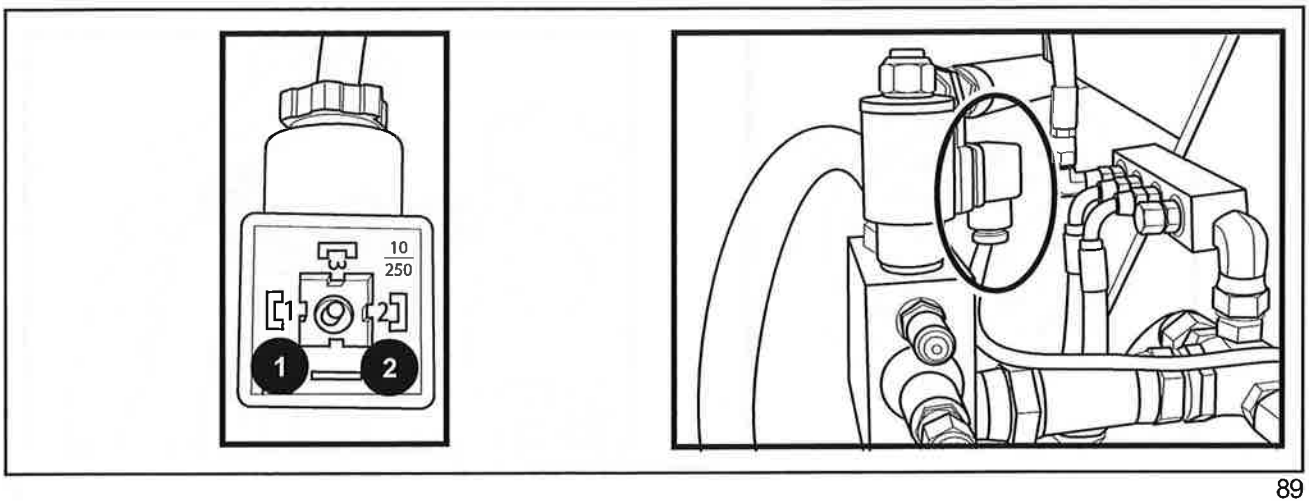

89

	CAVITY	WIRE	LINKED TO CONNECTOR
C256 - Billet length (SOL - 047)	1 2	8087 Blue 7166 White	C010-15 C010-14

REAR HARNESS, LEFT SIDE (87733451) (Continued)

Connector, located behind the engine compartment, next to the chopper block

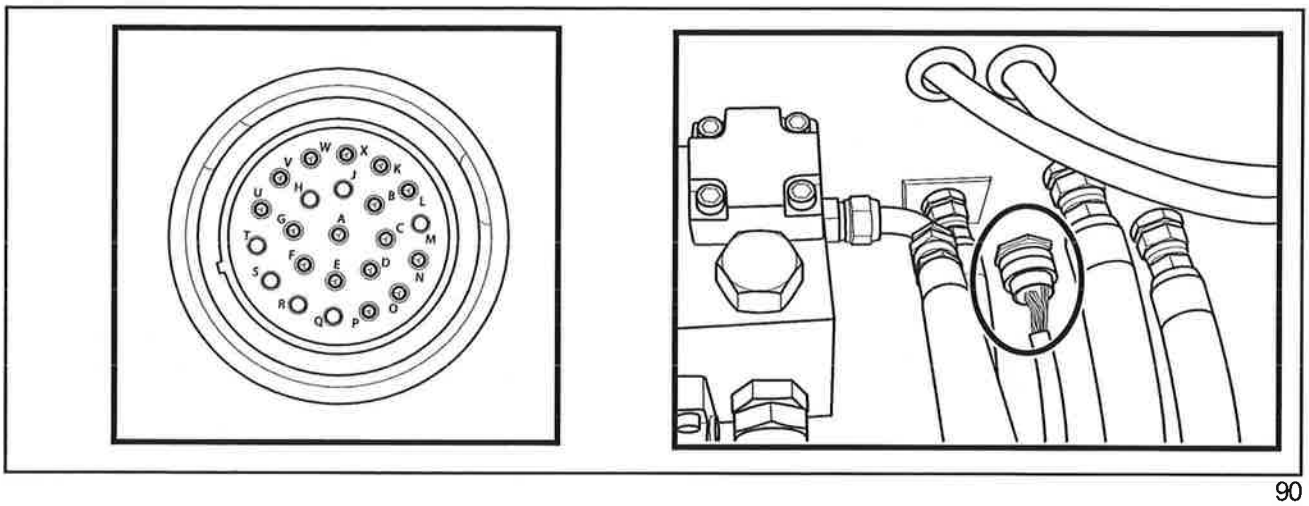

90

	CAVITY	WIRE	LINKED TO CONNECTOR
C010 - DEUTSCH connector - rear left side	1	7236 White	C203-3
	2	7227 White	C203-24
	3	7228 Gray	C203-25
	4	7229 White	C203-2
	5	7230 White	C203-6
	6	7231 Gray	C203-8
	7	7232 White	C203-4
	8	7233 Gray	C203-5
	9	7234 White	C203-21
	10	7235 Gray	C203-21
	11	8099	C203-18
	12	7237 Purple	C405-17
	13	7238 White	C406-13
	14	7165 White	C202-6
	15	8088 Black	C202-20
	16	9219 Black	C284 (Ground)
	17	9218 Black	C284 (Ground)
	18	5041 Green	C406-8
	19	5040 Yellow	C406-6
	20	2065 Orange	C406-15
	21	7239 Purple	C406-22
	22	7240 Purple	C405-1
	23	7241 Purple	C405-2
	24	7242 Purple	C406-10
	25	7243 Purple	C406-9

REAR HARNESS, LEFT SIDE (87733451) (Continued)

Connector located in the chassis' left side, next to the chopper's hydraulic motors

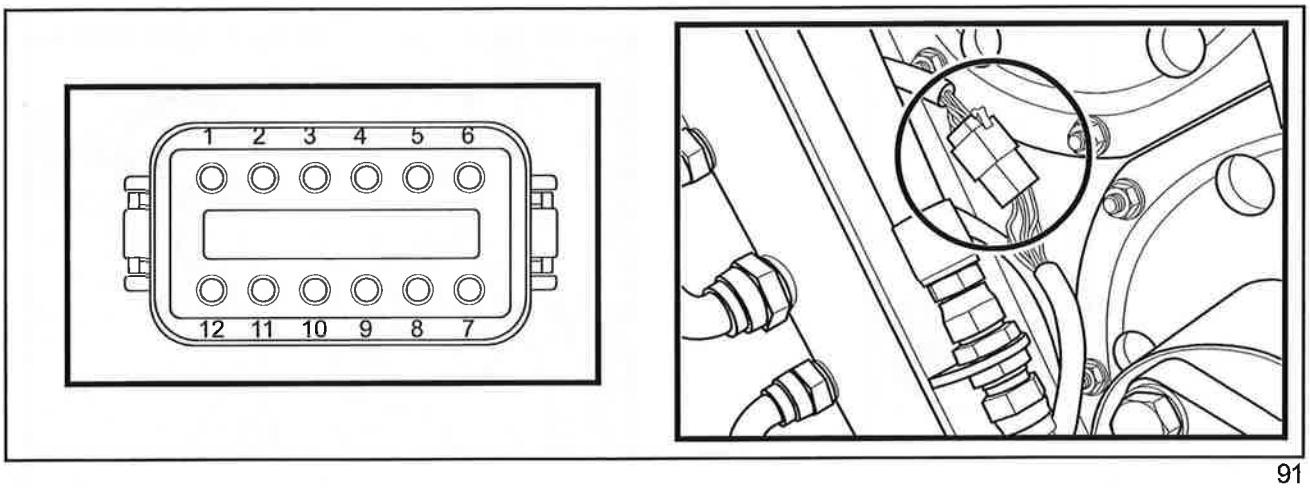

91

	CAVITY	WIRE	LINKED TO CONNECTOR
C019 - Elevator underside connector	1	7248 White	C010-1
	2	7249 White	C010-2
	3	7250 Gray	C010-3
	4	7251 White	C010-4
	5	7252 White	C010-5
	6	7253 Gray	C010-6
	7	7254 White	C010-7
	8	7255 Gray	C010-8
	9	7256 White	C010-9
	10	7257 Gray	C010-10
	11	7258 Purple	C010-12

TRACTION PUMP HARNESS (87735777)

Located in the transmission pumps

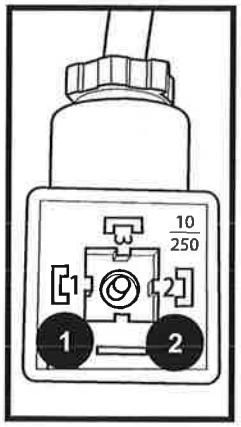

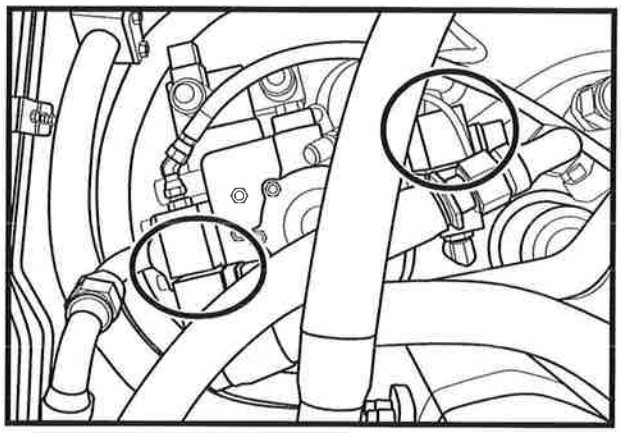

92

	CAVITY	WIRE	LINKED TO CONNECTOR
Connector C219 - Lock valve, right side (Only model 8000)	1 2	9113 Black 7122 White	C007-8 C007-9
Connector C218 - Lock valve, left side (Only model 8000)	1 2	9113 Black 7122 White	C007-8 C007-9

TRACTION PUMP HARNESS (87735777) (Continued)

Located in the transmission pumps

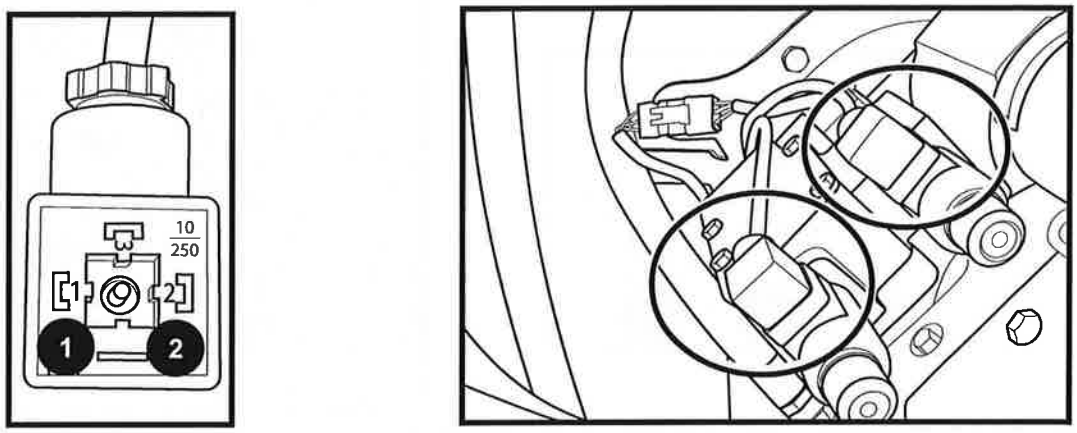

93

	CAVITY	WIRE	LINKED TO CONNECTOR
Connector C212 - Traction pump, left side to front (SOL-003)	1 2	7011 White 3007 Orange	C007-6 C007-3
Connector C213 - Traction pump, left side to back (SOL-004)	1 2	7013 Gray 3007 Orange	C007-7 C007-3
Connector C210 - Traction pump, right side to front (SOL-001)	1 2	7007 White 3007 Orange	C007-4 C007-3
Connector C211 - Traction pump, right side to back (SOL-002)	1 2	7009 Gray 3007 Orange	C007-5 C007-3

TRACTION PUMP HARNESS (87735777) (Continued)

Located in the transmission pumps

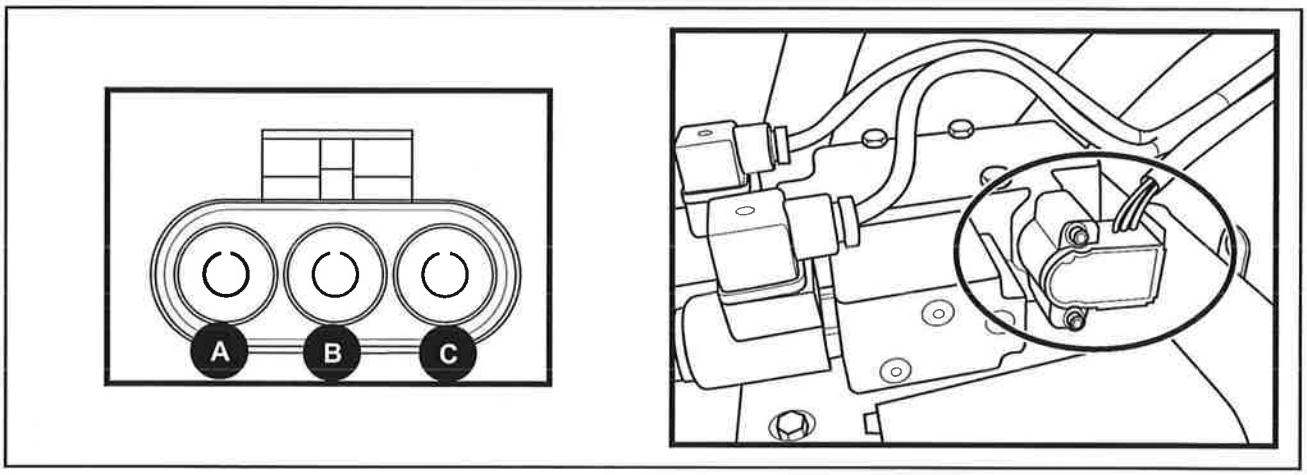

94

	CAVITY	WIRE	LINKED TO CONNECTOR
Connector C166 - Traction pump sensor, right side (SEN-002)	A B C	9031 Blue 8015 Yellow 2009 Orange	C007-2 C007-10 C007-1
Connector C167 - Traction pump sensor, left side (SEN-003)	A B C	9030 Blue 8017 Yellow 2009 Orange	C007-2 C007-11 C007-1

TRACTION PUMP HARNESS (87735777) (Continued)

Located between the engine and the four-hole gearbox in the upper side

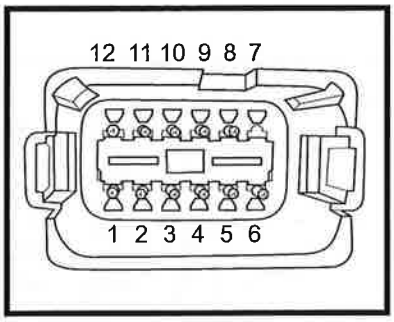

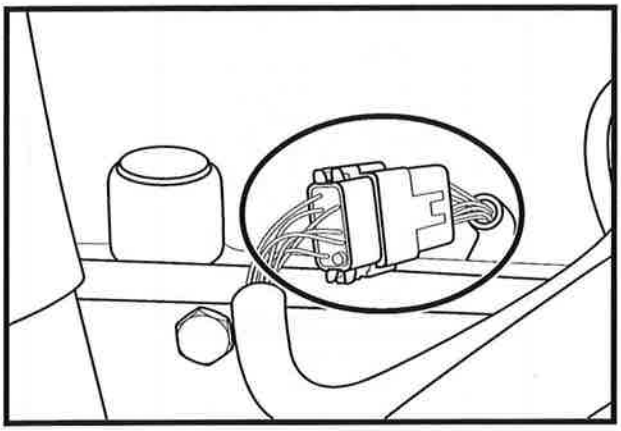

95

	CAVITY	WIRE	LINKED TO CONNECTOR
Connector C007 - Traction pump harness connector	1	2064 Orange	C013-16
	2	9201 Blue	C013-4
	3	3010 Orange	C013-14
	4	7200 White	C013-2
	5	7201 Gray	C013-3
	6	7202 White	C013-6
	7	7203 Gray	C013-8
	8	9203 Black	C284 (Ground)
	9	7204 White	C202-13 (SCM 2)
	10	8091 Yellow	C013-5
	11	8092 Yellow	C013-9

CABIN HARNESS (87697207)

Located together with the operator's right side modules

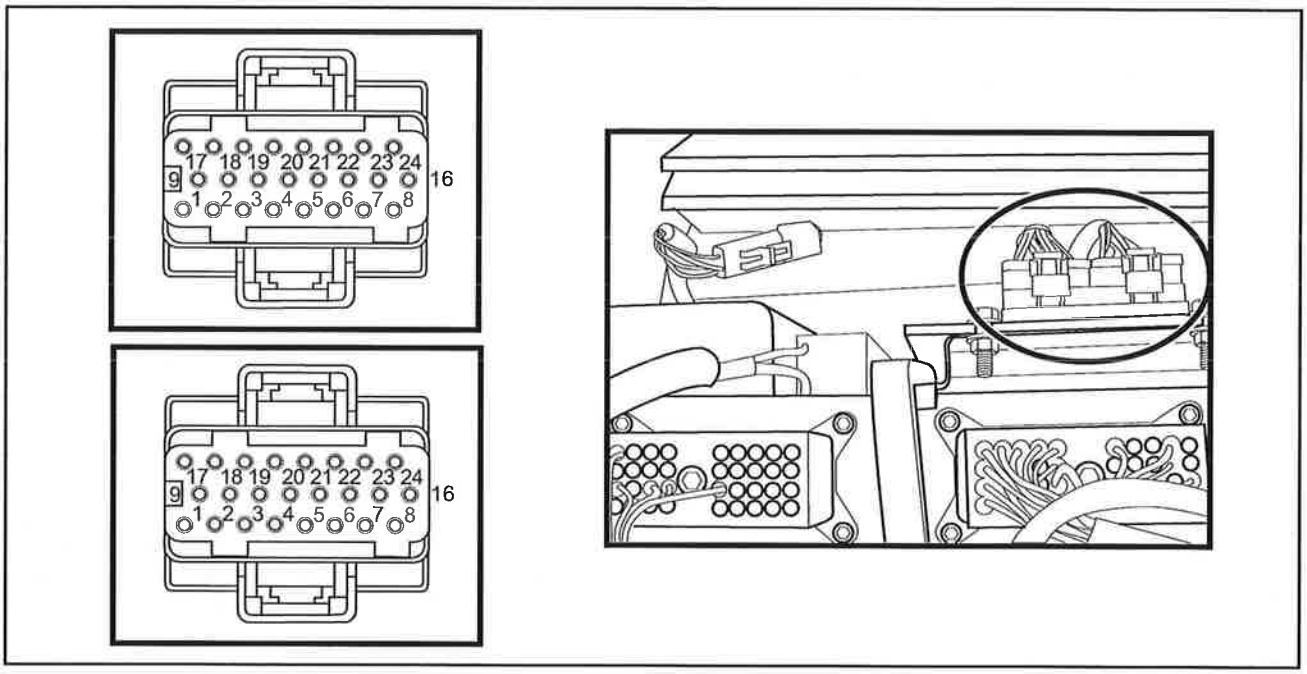

96

	CAVITY	WIRE	LINKED TO CONNECTOR
Connector C017 - Traction Maestro II A	1	9220 Black	C042 - 9
	2	7010 White	C013 - 6
	5	7012 Gray	C013 - 8
	7	7006 White	C013 - 2
	8	7008 Gray	C013 - 3
	13	7014 White	C013 - 11
	14	7016 White	C013 - 12
	15	8020 Yellow	C013 - 13
	16	9026 Black	C281 (Ground)
	17	9027 Black	C281 (Ground)
	19	8021 Yellow	C042 - 3
	20	8013 Orange	Secure Sup Eaton
	21	8014 Orange	Secure Sup Eaton
	22	8011 Blue	C408-6
Connector C018 - Traction Maestro II B	1	9034 Blue	C013 - 4
	3	8016 Yellow	C013 - 5
	6	4025 Green	C408 - 7
	7	4024 Yellow	C408 - 3
	8	2003 Orange	C040 - 8
	11	8018 Yellow	C013 - 9
	20	5010 Yellow	C408 - 2
	21	5011 Green	C408 - 1
	22	1016 Red	C407 - 13

CABIN HARNESS (87697207) (Continued)

Located together with the operator's right side modules

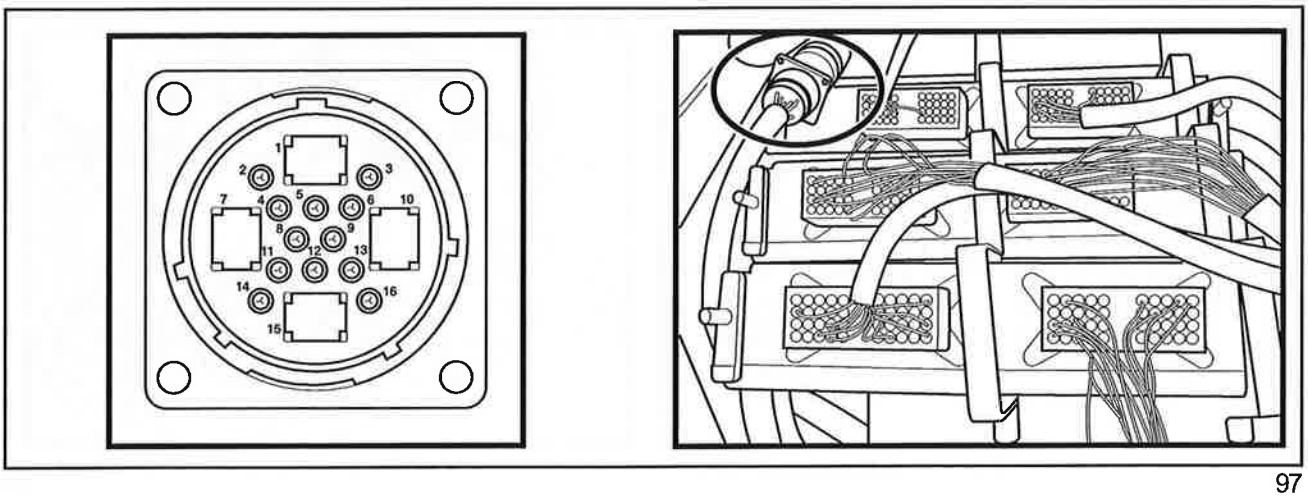

97

	CAVITY	WIRE	LINKED TO CONNECTOR
Connector C013 - Traction	2	7006 White	C017 - 7
	3	7008 Gray	C017 - 8
	4	9034 Blue	C018 - 1
	5	8016 Yellow	C018 - 3
	6	7010 White	C017 - 2
	8	7012 Gray	C017 - 5
	9	8018 Yellow	C018 - 11
	11	7014 White	C017 - 13
	12	7016 White	C017 - 14
	13	8020 Yellow	C017 - 15
	14	3002 Orange	Secure Sup Eaton
	16	2008 Orange	C018 - 24

CABIN HARNESS (87697207) (Continued)

Located in the module - operator's right side

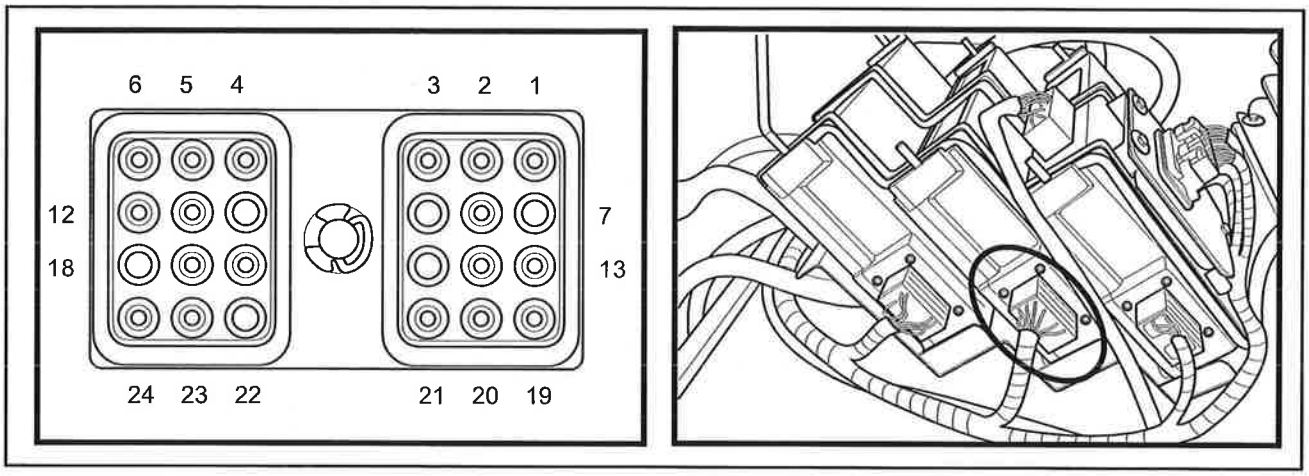

98

	CAVITY	WIRE	LINKED TO CONNECTOR
Connector C201 - Module SCM 2	1	1016 Red	C407 - 13
	3	8054 Yellow	C409 - 10
	4	2006 Orange	C407 - 17
	5	7119 White	C408 - 13
	6	8008 Orange	C408 - 15
	8	9016 Black	C281 (Ground)
	9	8080 Yellow	C069 - 3
	12	8027 Yellow	C153 - 1
	13	4017 Green	C408 - 7
	14	4016 Yellow	C408 - 3
	15	8079 Yellow	C069 - 2
	17	3028 Orange	C408 - 17 (Cab)
	18	7116 White	C409 - 17
	19	8001 Yellow	C040 - 2
	20	3024 Orange	C408 - 11 (Cab)
	21	2062 Pink	C069 - 1
	22	7004 White	C408 - 19
	23	8007 Blue	C408 - 21
	24	7000 White	C410 - 3

CABIN HARNESS (87697207) (Continued)

Located in the module - operator's right side

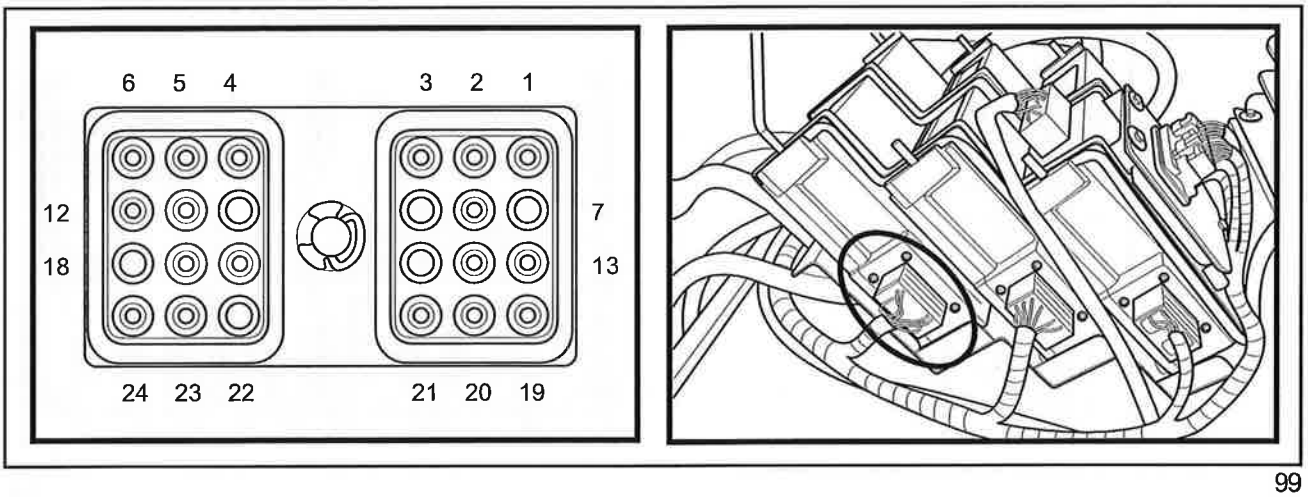

99

	CAVITY	WIRE	LINKED TO CONNECTOR
Connector C101 - Module SCM 1	1	1016 Red	C407 - 13
	2	8038 Yellow	C410 - 6
	4	2004 Red	C410 - 11
	5	7061 Purple	C138 - 1
	6	8006 Orange	C410 - 21
	8	9011 Black	C281 (Ground)
	9		
	11	7118 White	C409 - 6
	12	8043 Yellow	C060 - B
	13	4013 Green	C408 - 7
	14	4012 Yellow	C408 - 3
	17	3023 Orange	C410 - 20
	19	2005 Yellow	C410 - 9
	20	3019 Orange	C410 - 18
	21	2031 Orange	C060 - A
	22	7003 White	C410 - 16
	23	8005 Blue	C410 - 13
	24	7019 White	C409 - 18

CABIN HARNESS (87697207) (Continued)

Located in the fuse board

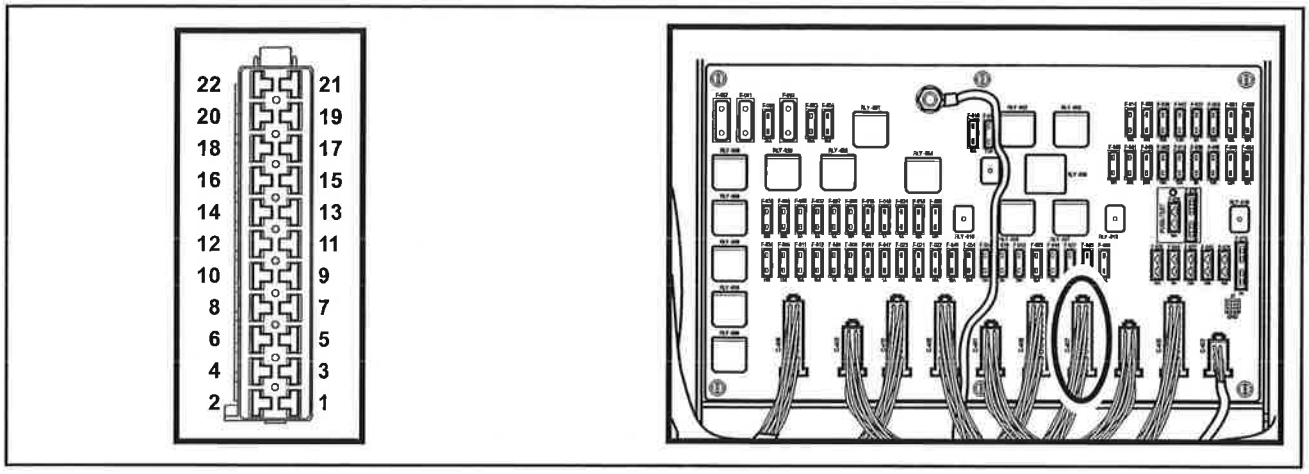

100

	CAVITY	WIRE	LINKED TO CONNECTOR
Connector C407 - Printed circuit board	1	7075 Purple	C052 (SW014)
	5	6101 Yellow	C001 - E
	11	7041 Purple	C403 - 8
	12	7033 White	C405 - 15
	13	1017 Red	C101 - 1
	14	7070 Purple	C051 (SW013)
	15	1013 Red	C040 - 1
	16	7037 Gray	C405 - 19
	17	1052 Red	Fuse - 013
	18	1046 Red	Fuse - 040
	19	1038 Red	Fuse - 042
	20	1053 Red	Fuse - 014
	21	1043 Red	Fuse - 039
	22	1049 Red	Fuse - 041

CABIN HARNESS (87697207) (Continued)

Located in the fuse board

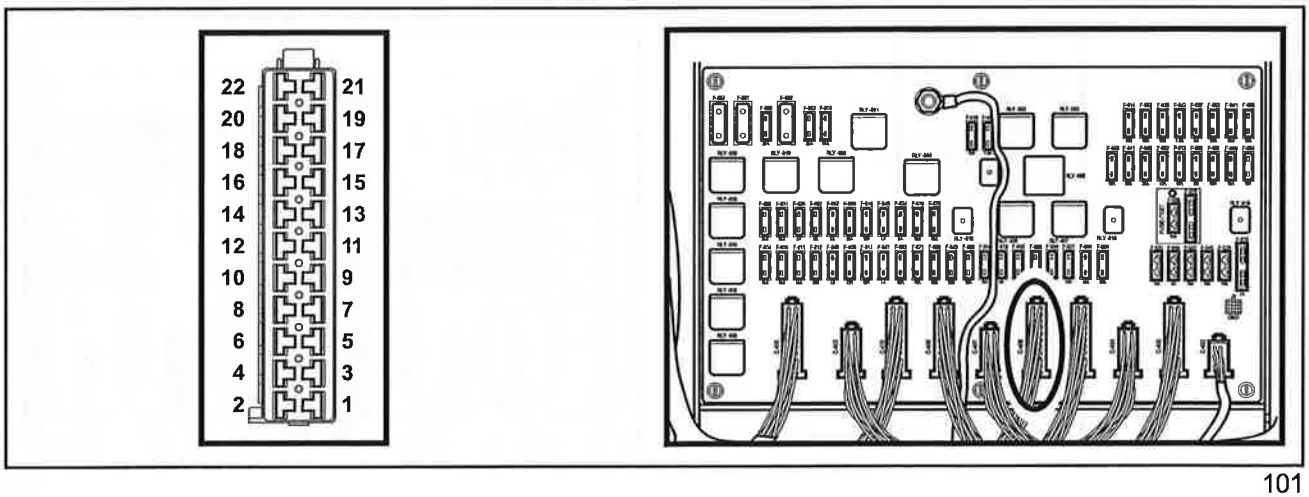

101

	CAVITY	WIRE	LINKED TO CONNECTOR
Connector C408 - Printed circuit board	1	5007 Green	connector diag - J
	2	5006 Yellow	connector diag - H
	3	4040 Yellow	Mod011 C025- 18
	4	3002 Orange	C013 - 14
	5	6004 Blue	C014 - 8
	6	8011 Blue	C017 - 22
	7	4041 Green	Mod011 C025- 19
	10	6004 Blue	C014 - 9
	11	3024 Orange	C201 - 20 (SCM 2)
	12	2060 / 2062 Pink	C201-21 / C069-1
	13	7119 White	C201-5
	14	3033 Orange	C301-17
	15	8008 Orange	C201-6
	16	8009 Blue	C301 - 23
	17	3028	C201 -17
	18	7005 White	C301 - 22
	19	7004 White	C201 - 22
	21	8007 Blue	C201 - 23
	22	8010 Orange	C301 - 6

CABIN HARNESS (87697207) (Continued)

Located in the fuse board

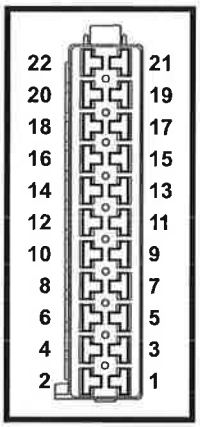

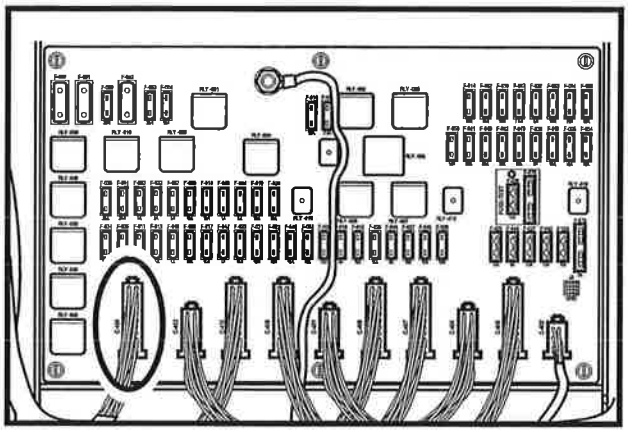

102

	CAVITY	WIRE	LINKED TO CONNECTOR
Connector C409 - Printed circuit board	1	9226 Black	GND-999 (Ground)
	2	9227 Black	GND-999 (Ground)
	3	7053 White	C157 - 8
	4	7092 Purple	C055 - 1 (SW017)
	5	7052 White	C028 - 5
	6	7118 White	C101 - 11 (SCM 1)
	7	7055 White	C157 - 6
	8	7050 White	C028 - 4
	9	7054 White	C028 - 6
	10	8054 Yellow	C406 -1
	11	7057 White	C157 - 17
	12	7058 White	C157 - 14
	13	7056 White	C028 - 7
	14	7083 Purple	C054 - 1 (SW016)
	15	7117 White	87 (RLY011)
	16	7091 Purple	C055 - 3 (SW017)
	17	7116 White	C201 - 18 (SCM 2)
	18	7019 White	Rele 009
	19	3037 Orange	F036 / 24 A
	20	3034 Orange	F031 / 25 A
	21	3041 Orange	F034 / 15 A
	22	3040 Orange	F035 / 15 A

CABIN HARNESS (87697207) (Continued)

Located in the fuse board

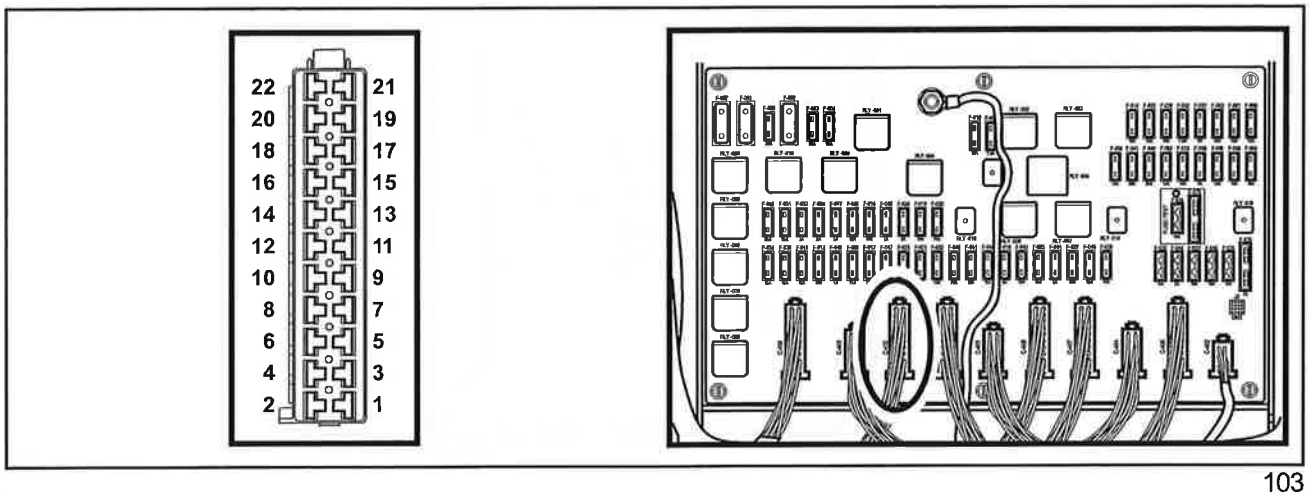

103

	CAVITY	WIRE	LINKED TO CONNECTOR
Connector C410 - Printed circuit board	1	7078 Purple	C053 - 3 (SW015)
	2	7018 Purple	D002/D003
	3	7000 White	C201 - 24 (SCM2)
	4	7195 Purple	C403-4
	5	7196 Purple	C403-6
	6	8038 Yellow	D001 (C410-8)
	7	2000 Orange	C040-5
	8	8037 Purple	
	9	8003 Yellow	C025 - 13
	10	2026 Orange	F019 / 10 A
	11	2004 Red	F046 / 1,0 A
	12	2024 Orange	F021 / 10 A
	13	8005 Blue	C101 - 23 (SCM1)
	14	2019 Orange	F024 / 7,5 A
	15	3000 Orange	C025 - 4
	16	7003 White	C101 - 22 (SCM 1)
	17	2006 Orange	C201 - 4 (SCM 2)
	18	3019 Orange	C101 - 20 (SCM 1)
	19	2007 Orange	C301 - 4 (SCM 3)
	20	3023 Orange	C101 - 17 (SCM 1)
	21	8006 Orange	C101 - 6 (SCM 1)
	22	2029 Orange	F023 / 15 A

CABIN HARNESS (87697207) (Continued)

Located in the cabin right side

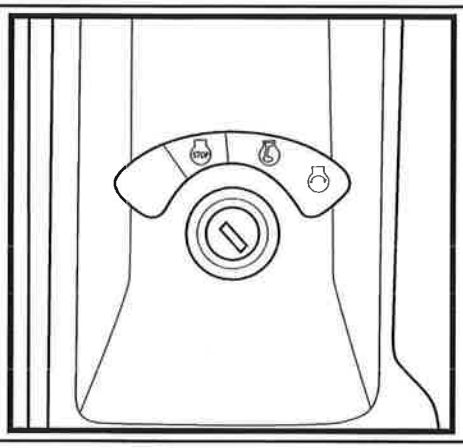

104

	CAVITY	WIRE	LINKED TO CONNECTOR
Connector C040 - Ignition key (SW-002)	1	1013 Red	C407 - 15
	2	8001 Yellow	C201 - 19
	5	2000 Orange	C410 - 7
	6	2002 Orange	C101 - 9 SCM1

Located under the floor mat

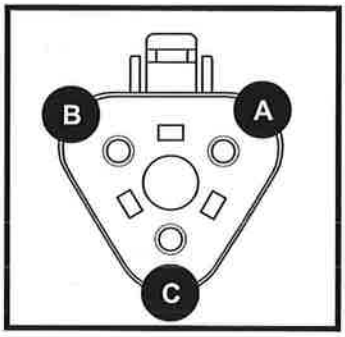

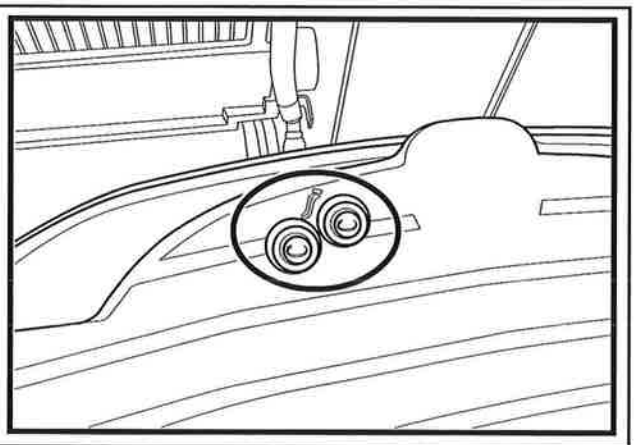

105

	CAVITY	WIRE	LINKED TO CONNECTOR
Connector C069 - Elevator slew switch (SW031/SW032)	A	2060/2061 Pink	C201-21 / C408-12
	B	8079 Yellow	C201 - 15
	C	8080 Yellow	C201 - 9

CABIN HARNESS (87697207) (Continued)

Located in the arm rest, operator's left side

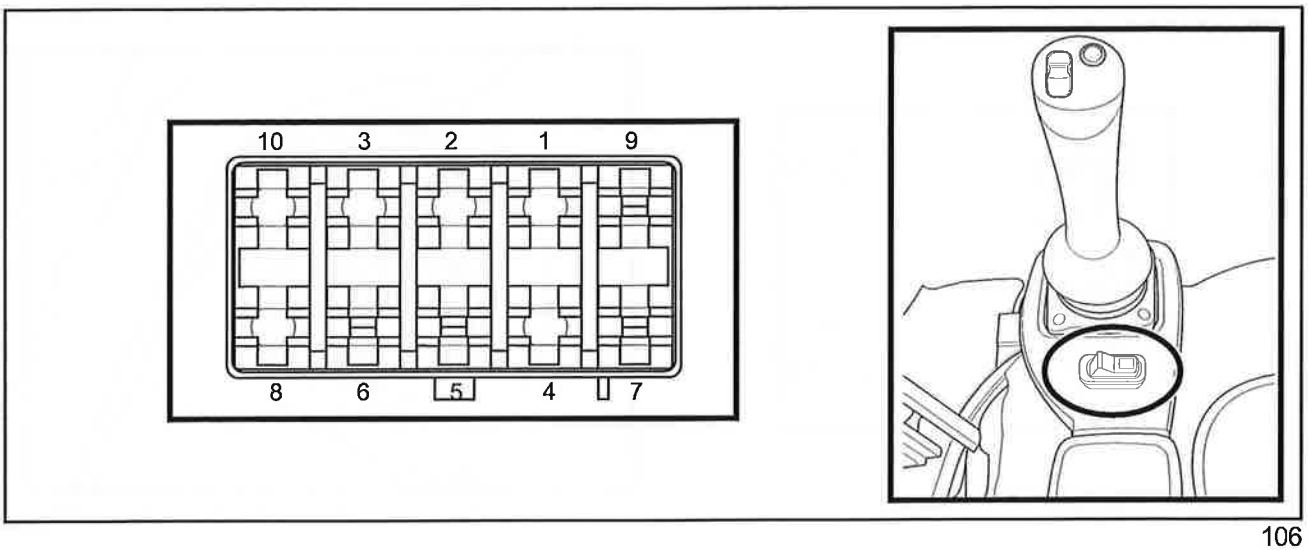

106

	CAVITY	WIRE	LINKED TO CONNECTOR
Connector C042 Cruise control (SW004)	3	8021 Yellow	C017 - 19
	7	3004 / 3003 Orange	C105-1 / C101-9
	9	9220 Black	C017 - 19
	28	9224 Black	C281 (Ground)

Located behind the operator's seat

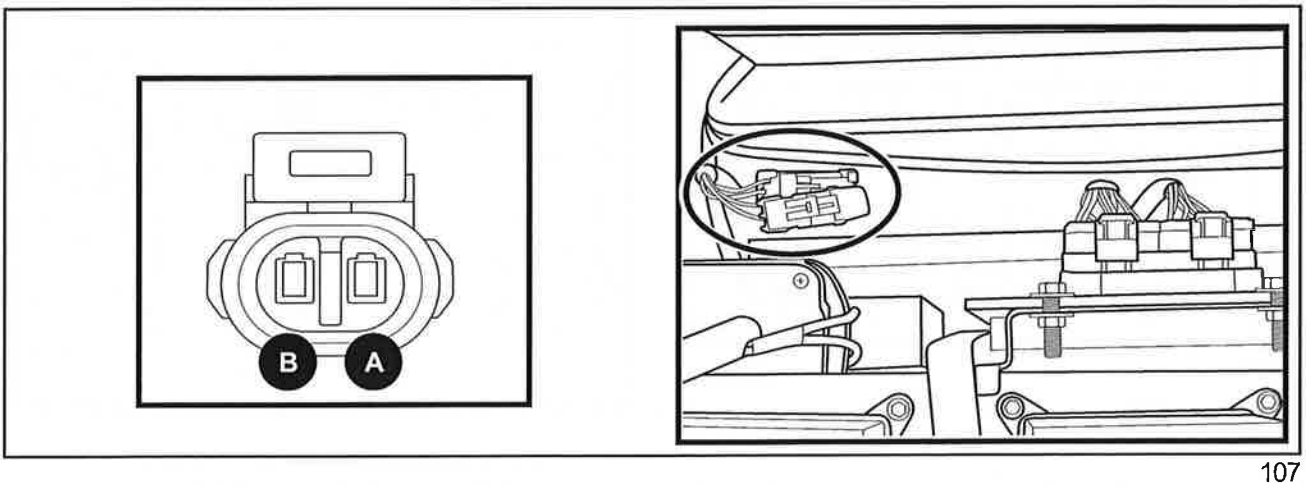

107

	CAVITY	WIRE	LINKED TO CONNECTOR
Connector C060 - Seat switch (Seat) (SW022)	A B	2031 Orange 8043 Yellow	C101 - 21 C101 -12

CABIN HARNESS (87697207) (Continued)

Located in the cabin's roof

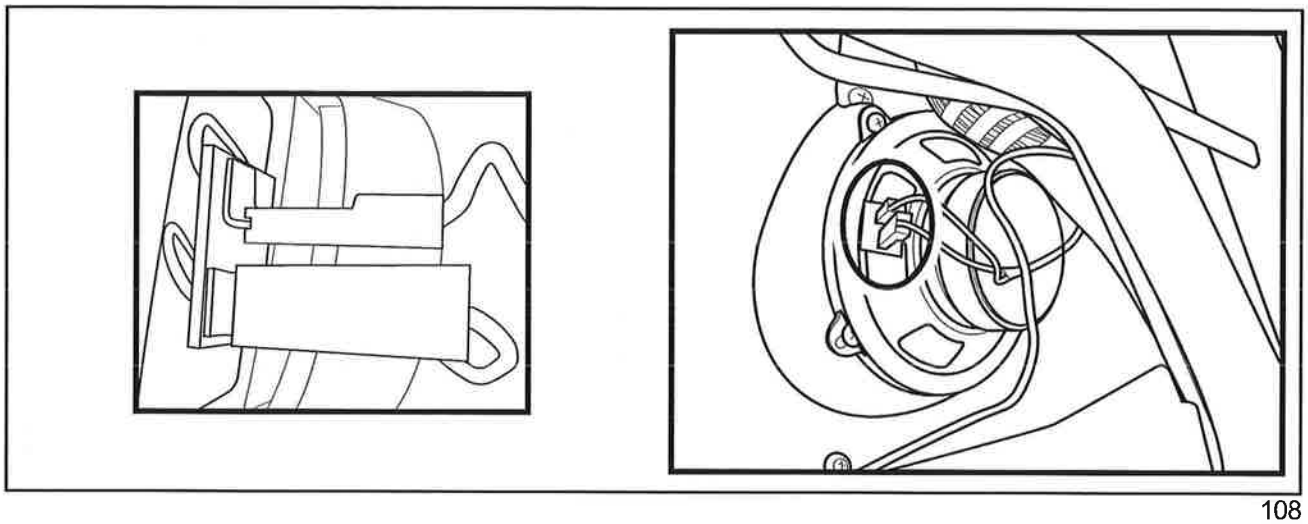

108

	CAVITY	WIRE	LINKED TO CONNECTOR
Connector C032 - Speaker	1	7049 Blue	C036 - 8 (AUD001)
Connector C034 - Speaker	1	7047 Blue	C036 - 2 (AUD002)
Connector C031 - Speaker	1	7048 White	C036 - 7 (AUD001)
Connector C033 - Speaker	1	7046 White	C036 - 1 (AUD002)

Located in the cabin's upper side

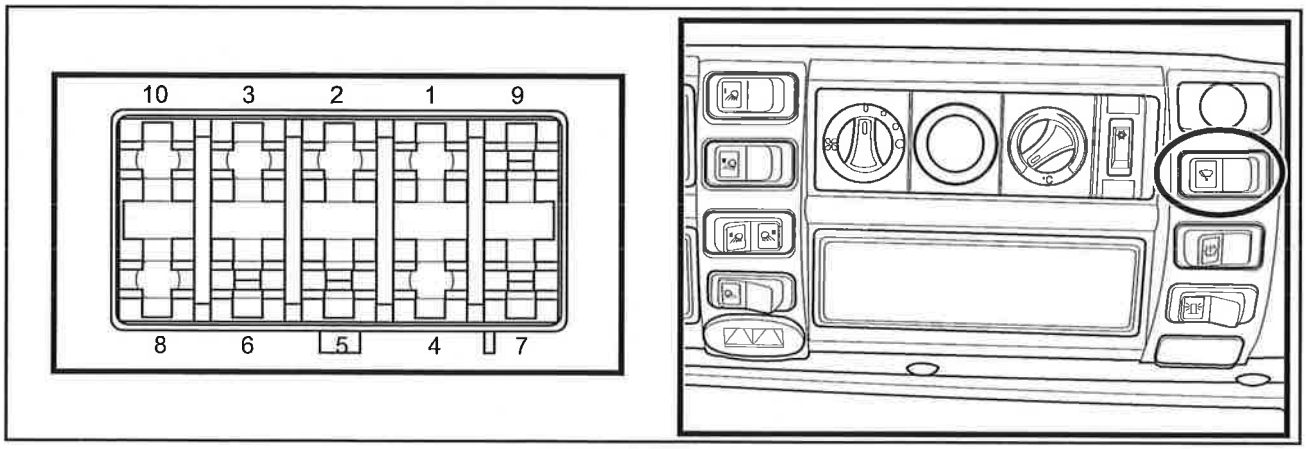

109

	CAVITY	WIRE	LINKED TO CONNECTOR
Connector C045 - Wiper switch (SW007)	2B	2024 Orange	C410-12
	3	7038 White	C155-4
	4	7040 Gray	C155-5
	6	7039 White	C155-3
	9	9059 Black	C282 (Ground)

CABIN HARNESS (87697207) (Continued)

Located in the cabin's upper side

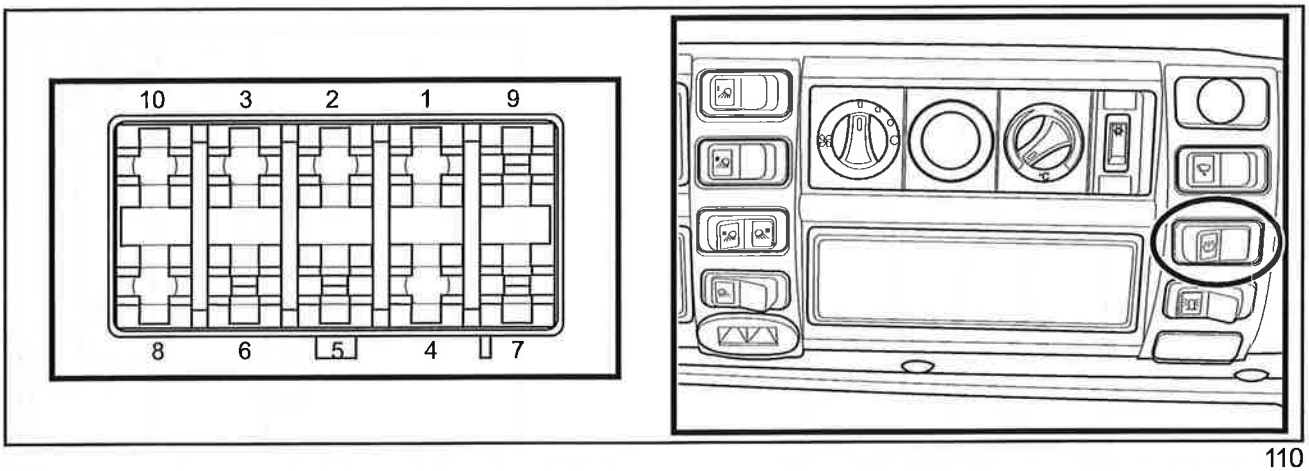

110

	CAVITY	WIRE	LINKED TO CONNECTOR
Connector C046 - Wiper water jet (washer) switch (SW008)	2 3	2024 Orange -	C410-12 C407-11

Located in the cabin's upper side

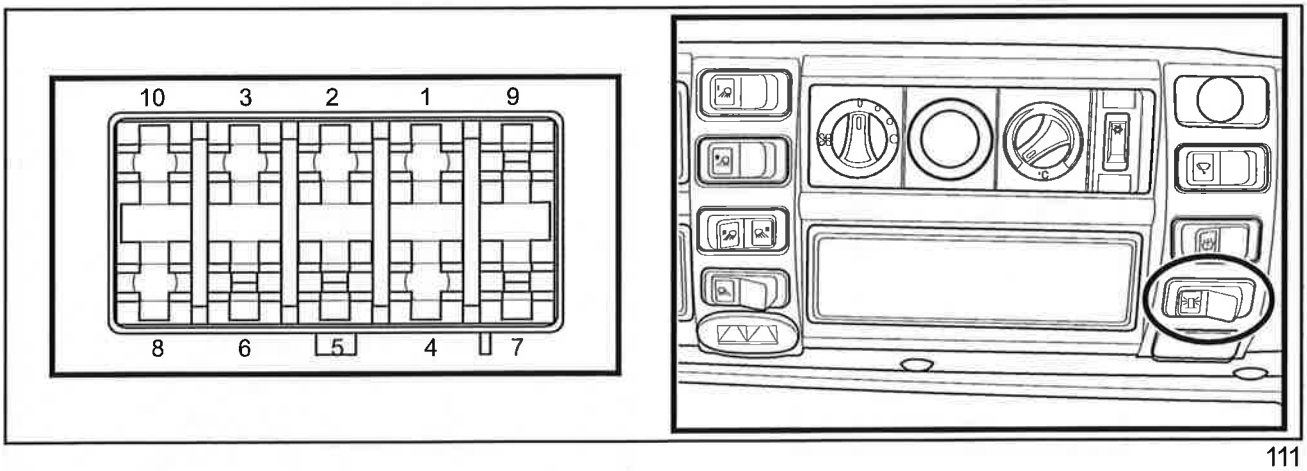

111

	CAVITY	WIRE	LINKED TO CONNECTOR
Connector C047 - Giroflex switch (SW009)	2B 3 7	1043 Red 7043 Purple 9060 Black	C407-21 C120-1 C282

CABIN HARNESS (87697207) (Continued)

Located in the door side, left side

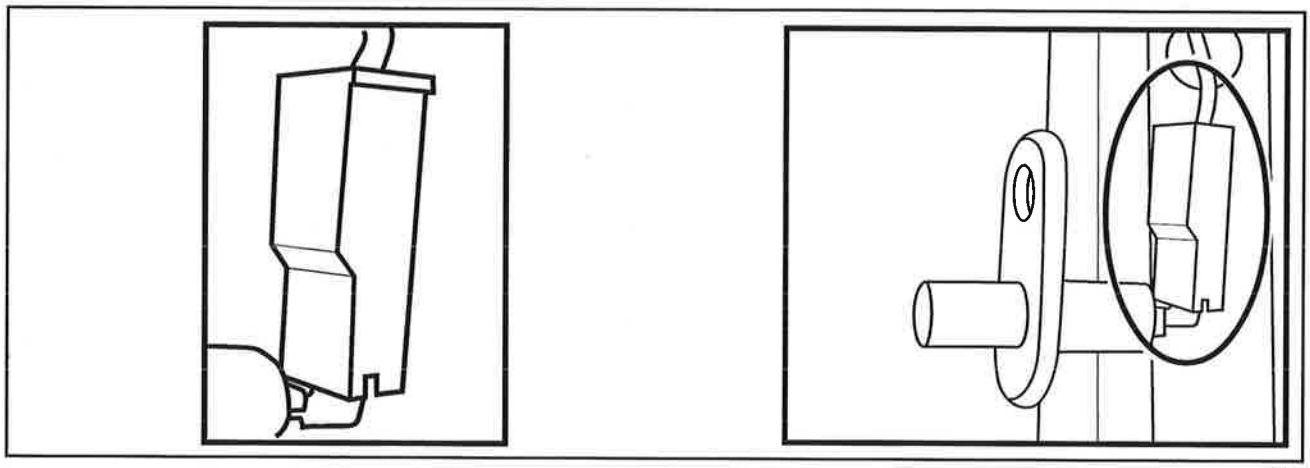

112

	CAVITY	WIRE	LINKED TO CONNECTOR
Connector C048 - Door switch (SW010)	1	7045 Blue	C125-1

Located in the cabin's roof, left side

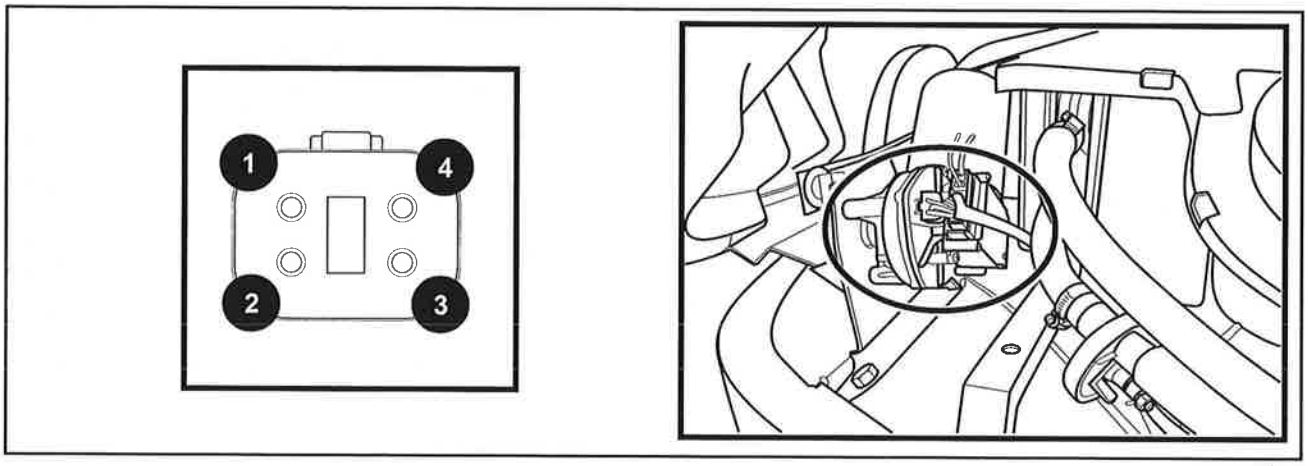

113

	CAVITY	WIRE	LINKED TO CONNECTOR
Connector C153 - Wiper motor (M006)	1 3 4	8027 Yellow 7033 White 7037 Gray	C201-12 C407-12 C406-16

CABIN HARNESS (87697207) (Continued)

Located in the cabin's roof, left side

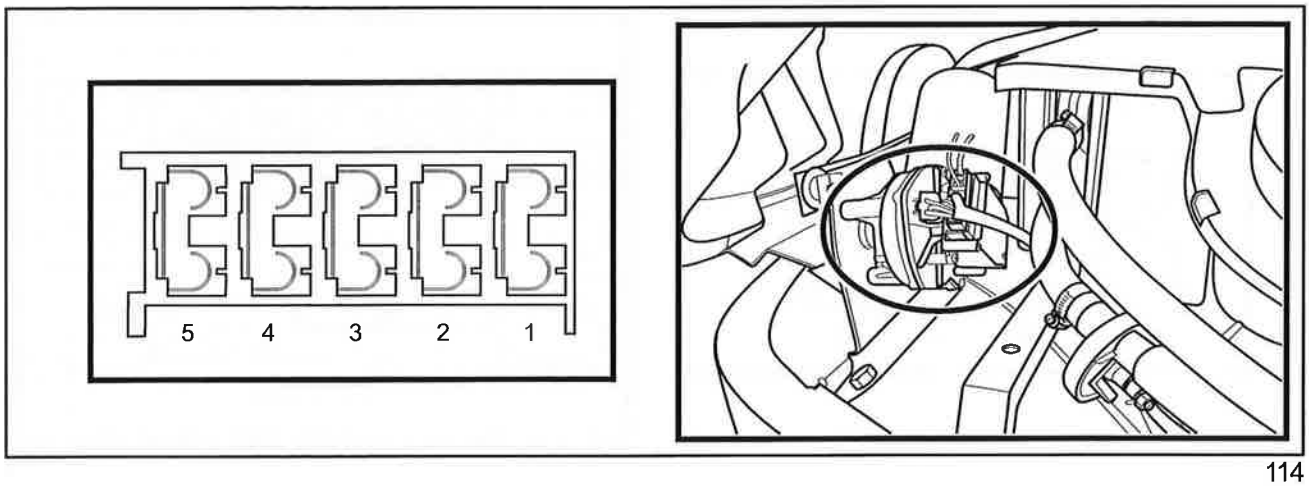

114

	CAVITY	WIRE	LINKED TO CONNECTOR
Connector C155 - Wiper motor (M006)	1	9064 Black	C282 (Ground)
	3	7039 White	C045-6
	4	7038 White	C045-3
	5	7040 Gray	C045-4

Located behind the cabin upper panel

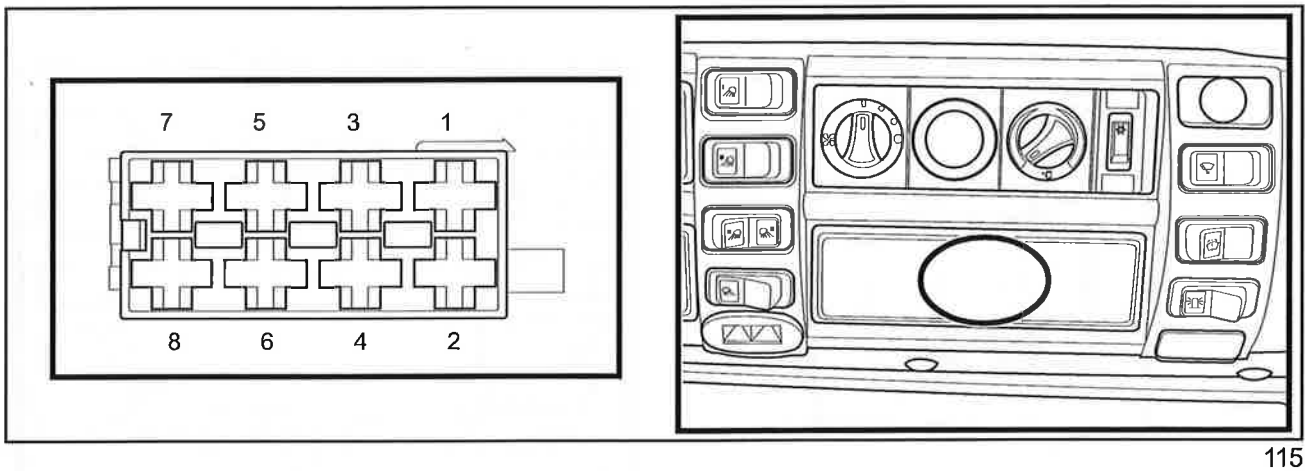

115

	CAVITY	WIRE	LINKED TO CONNECTOR
Connector C035 - Radio / CD (MOD-014)	4	2026 Orange	C410-10
	7	1046 Red	C407-18
	8	9067 Black	C282 (Ground)

CABIN HARNESS (87697207) (Continued)

Located behind the cabin upper panel

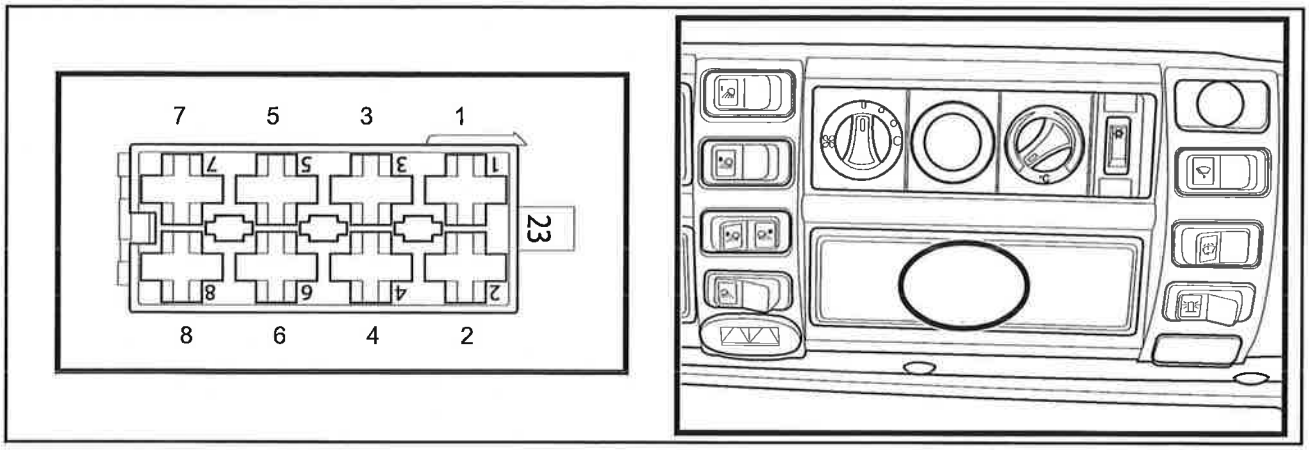

116

	CAVITY	WIRE	LINKED TO CONNECTOR
Connector C036 - Radio speaker	1	7076 White	C033-1
	2	7047 Blue	C034-1
	7	7048 White	C031-1
	8	7049 Blue	C032-1

Located behind the cabin upper panel

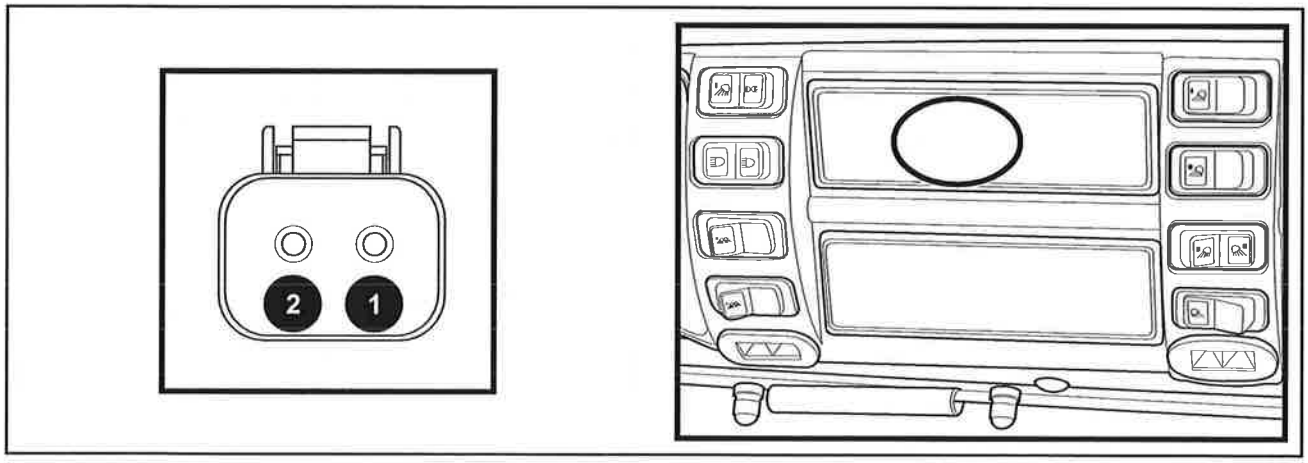

117

	CAVITY	WIRE	LINKED TO CONNECTOR
Connector C037 - Radio transmitter (MOD-015)	1	9066 Black	C282 (Ground)
	2	1046 Red	C407-18

CABIN HARNESS (87697207) (Continued)

Located in the cabin's upper side

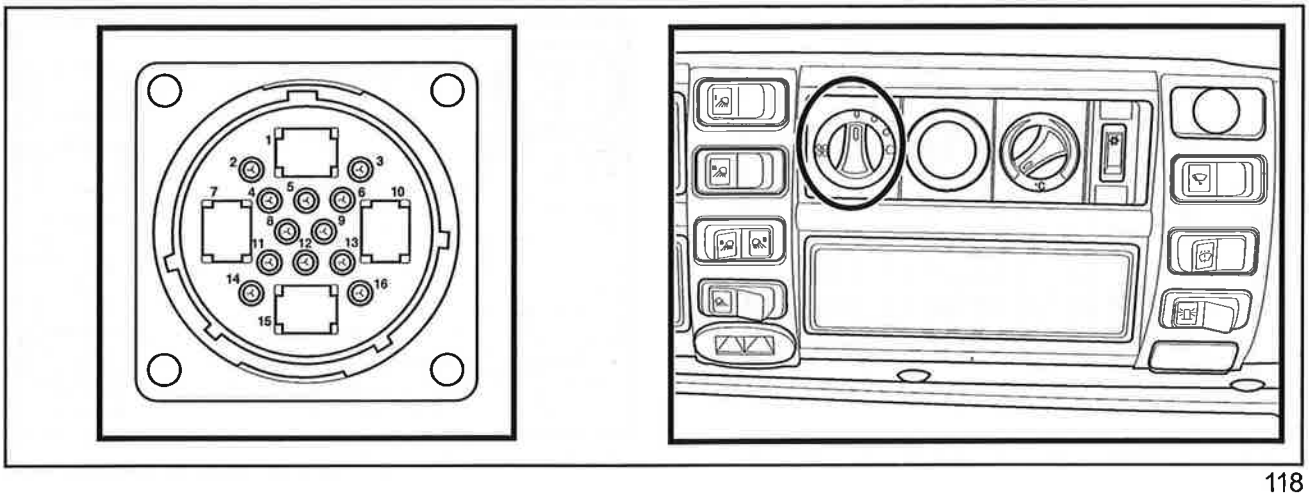

118

	CAVITY	WIRE	LINKED TO CONNECTOR
Connector C157 - Blower (M008)	2	8028 Yellow	C028-9
	3	9069 Black	C282 (Ground)
	4	9070 Black	C282 (Ground)
	5	8029 Yellow	C028-8
	6	7055 White	C409-7
	8	7053 White	C409-3
	12	7057 White	C409-11
	14	7058 White	C409-12

CABIN HARNESS (87697207) (Continued)

Located in the cabin's upper side

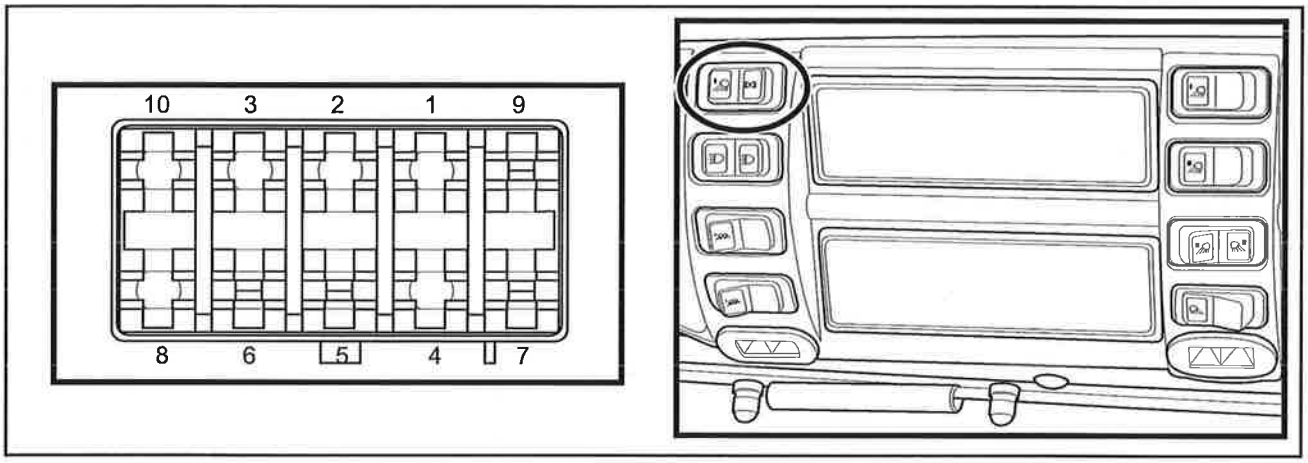

119

	CAVITY	WIRE	LINKED TO CONNECTOR
Connector C054 - Road lamps (SW016)	1	7083 Purple	C409-14
	2B	1051 Red	C054-5B
	3	7084 Purple	C011-P
	4	8037 Purple	C410-8
	5B	1051 Red	C054-2B
	6	8037 Purple	C410-8
	7	9090 Black	C054-8
	8	9090 Black	C054-7
Connector C055 - Road lamps High/Low Beam (SW017)	1	7092 Purple	C409-4
	2B	8037 Purple	C410-8
	3	7091 Purple	C409-16
	7	9100 Black	C055-8
	8	9100 Black	C055-7

CABIN HARNESS (87697207) (Continued)

Located in the cabin's upper side

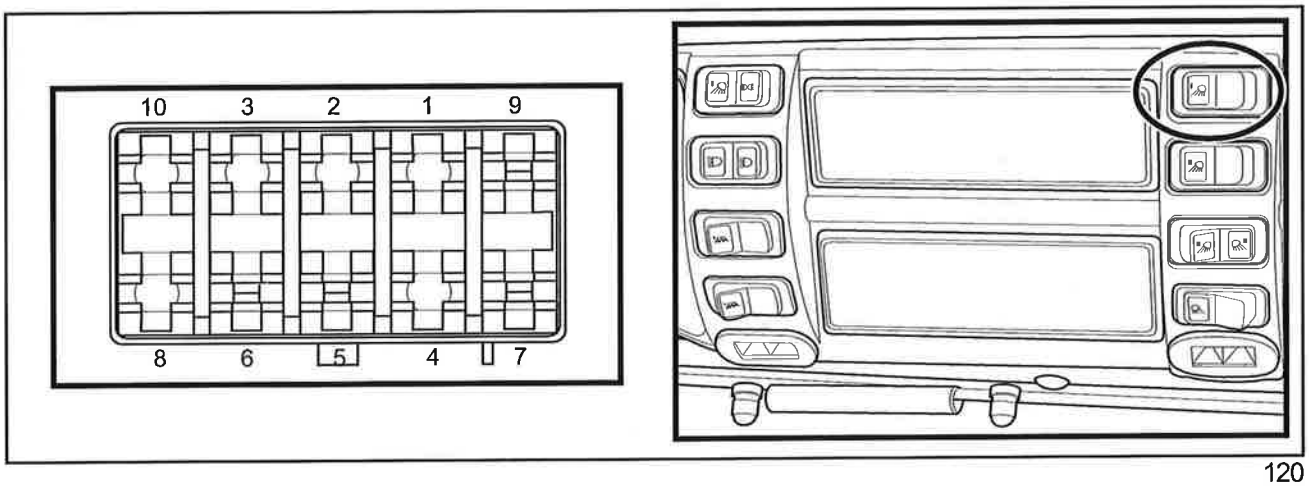

120

	CAVITY	WIRE	LINKED TO CONNECTOR
Connector C056 - Mid front lights (SW018)	2B 7 3	3040 9221 / 9097 7093 Purple	C409-22 C057-7 / C054-7 C011-O

Located in the cabin's upper side

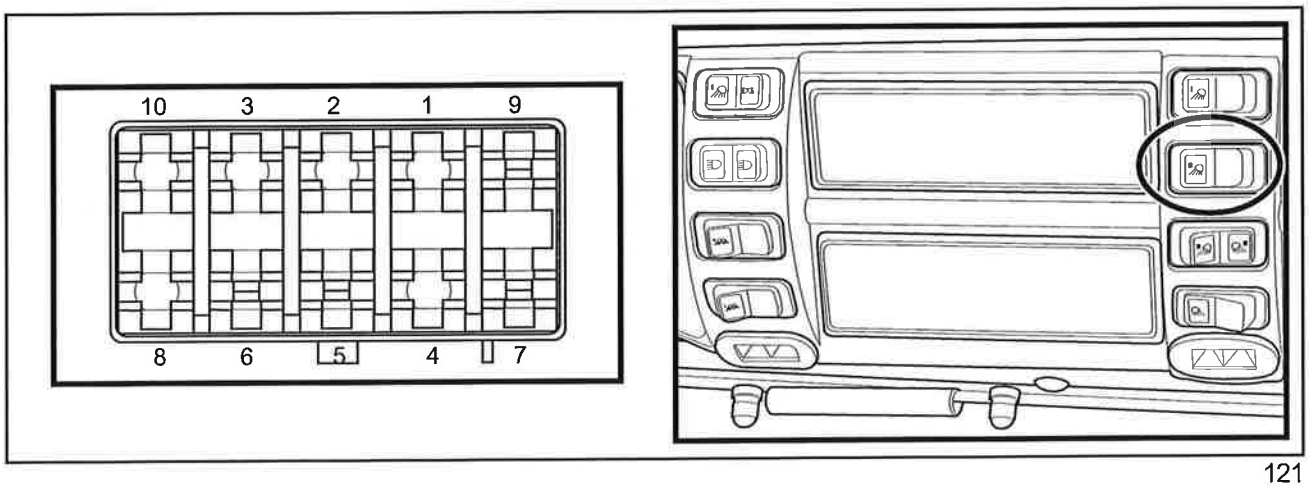

121

	CAVITY	WIRE	LINKED TO CONNECTOR
Connector C057 - Enable right or left lights WL (SW019)	2B 7 3	3041 Orange 7097 Purple 9221 / 9222	C409-21 C087-2B C056-7 / C087-7

CABIN HARNESS (87697207) (Continued)

Located in the cabin's upper side

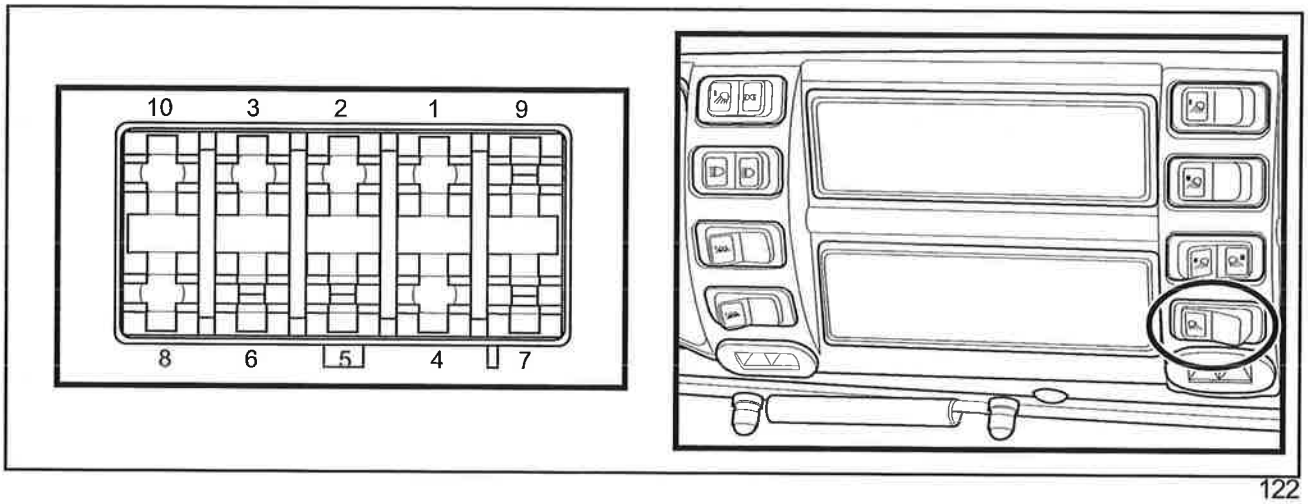

122

	CAVITY	WIRE	LINKED TO CONNECTOR
Connector C051 - Rear lights (SW013)	2B	3034 Orange	C409-20
	3	7070 Purple	C407-14
	5B	3034 Orange	C409-20
	6	7199 Purple	C011-C
	7	9094/9095 Black	C087-B / C137-2

Located in the cabin's upper side

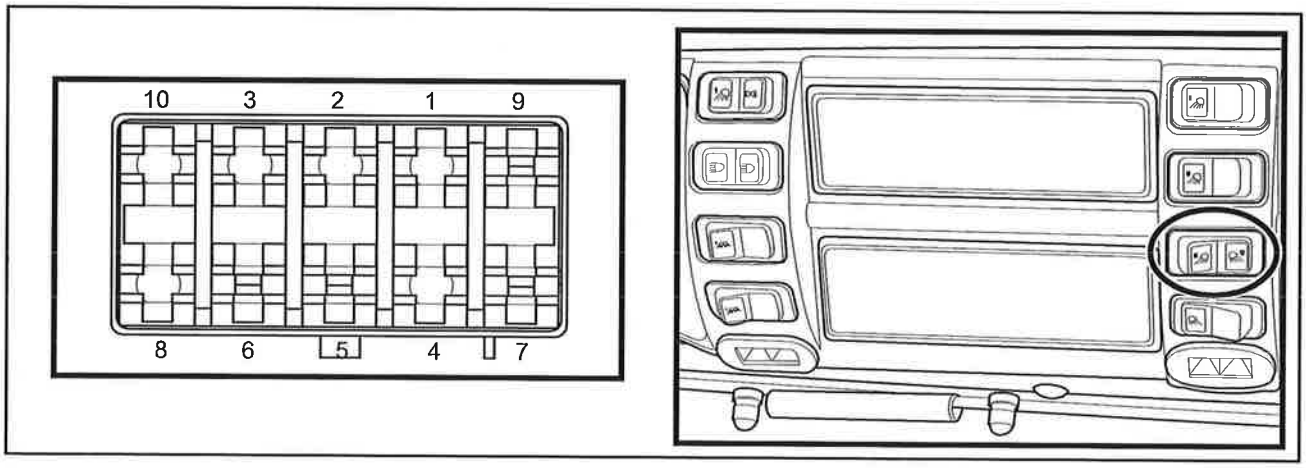

123

	CAVITY	WIRE	LINKED TO CONNECTOR
Connector C057 - Turn on right or left lights (SW055)	2B	7097/7098 Purple	C057-3 / C087-5B
	3	7059 Purple	C011-A
	4	7061 Purple	C011-B
	5B	7098 Purple	C087-2B
	7	9222/9093 Black	C057-7 / C087-8
	8	9093/9094 Black	C087-7 / C051-7
	9	7059 Purple	C011-A
	10	7061 Purple	C011-B

CABIN HARNESS (87697207) (Continued)

Located in the cabin's upper side

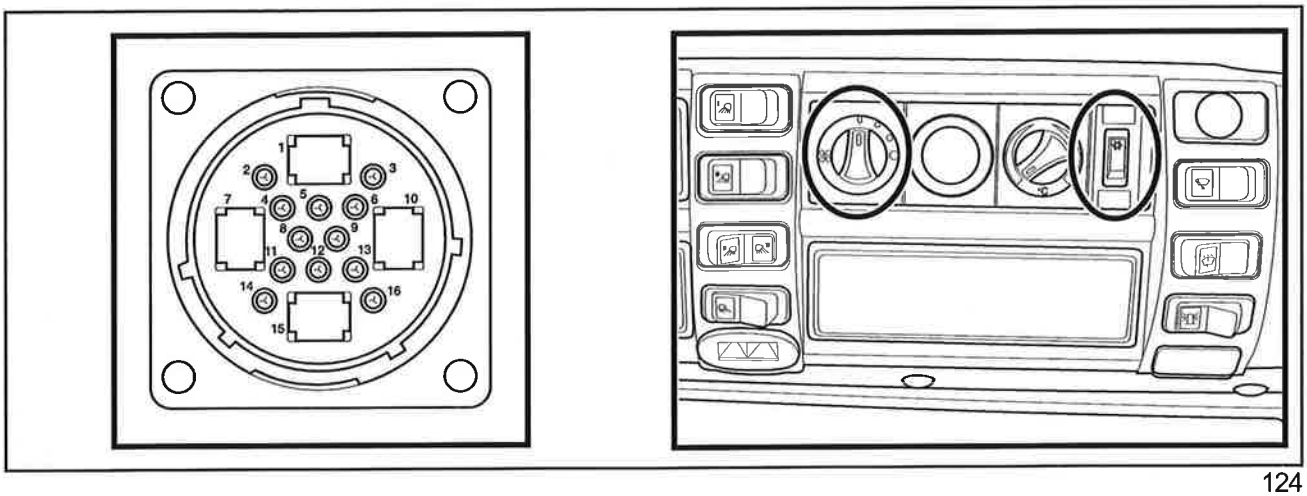

124

	CAVITY	WIRE	LINKED TO CONNECTOR
C028 - Air conditioning (MOD-016)	3	2026 Orange	C410-10
	4	7050 White	C409-8
	5	7052 White	C409-5
	6	7054 White	C409-9
	7	7056 White	C409-13
	8	8029 Yellow	C157-5
	9	8028 Yellow	C157-2
	10	8030 Yellow	C028-12
	12	8030 Yellow	C028-10
	13	9071 Black	C282 (Ground)

Located in the cabin's upper side

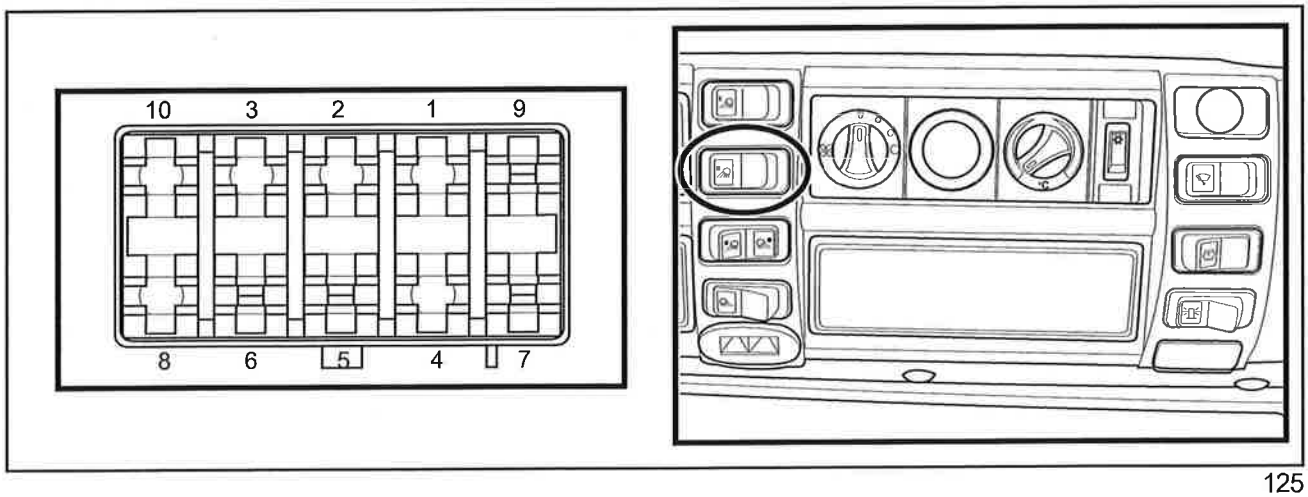

125

	CAVITY	WIRE	LINKED TO CONNECTOR
Connector C052 - Optional basecutter or topper lights (SW014)	2B	3037 Orange	C409-19
	3	7075 Purple	C407-1
	7	9101/9102 Black	C055-8 / C053-7

CABIN HARNESS (87697207) (Continued)

Located in the cabin's upper side

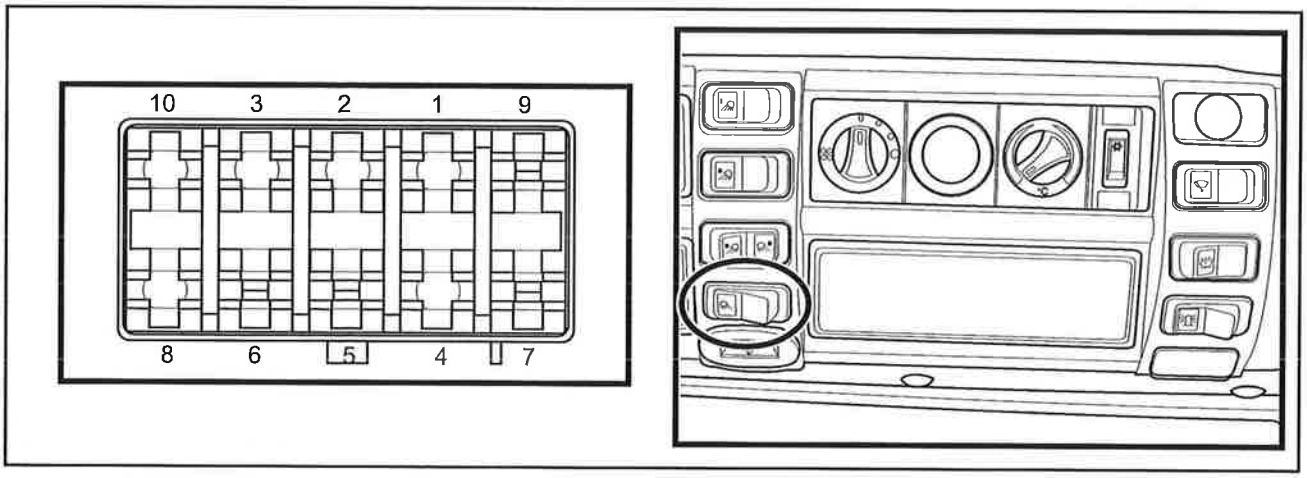

126

	CAVITY	WIRE	LINKED TO CONNECTOR
Connector C053 - Optional topper lights (SW15)	2B 3 7	3037 Orange 7078 Purple 9102/9096 Black	C409-19 C410-1 C052-7 / C138-2

Located in the cabin's upper side

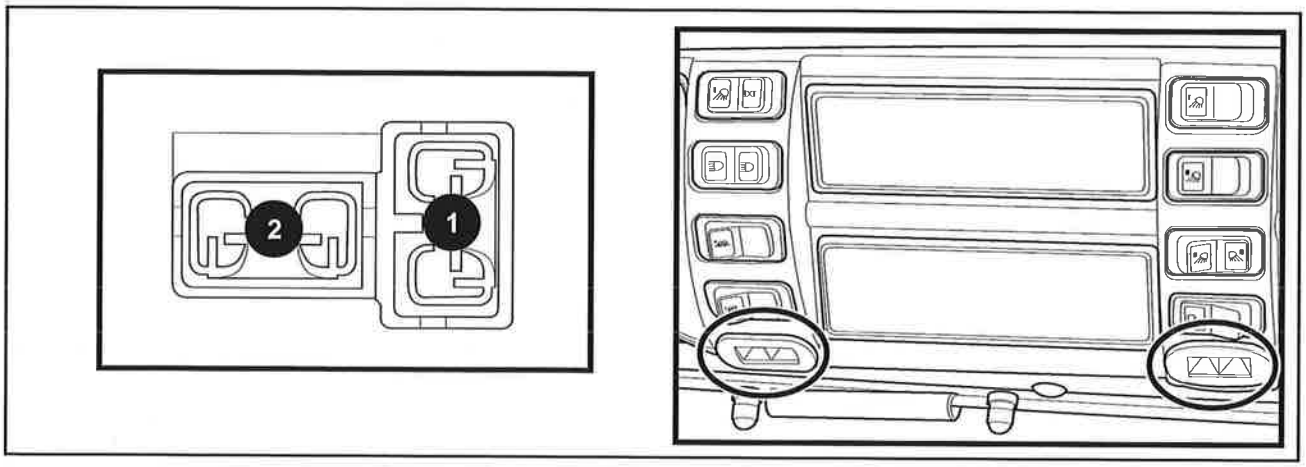

127

	CAVITY	WIRE	LINKED TO CONNECTOR
Connector C137 - Console lamps (LMP-017)	1 2	7065 Purple 9095 Black	C138-1 C051-7
Connector C138 - Console lamps (LMP018)	1 2	7061 Purple 9103 Black	C101-5 C282 (Ground)

CABIN HARNESS (87697207) (Continued)

Located in the cabin's upper side

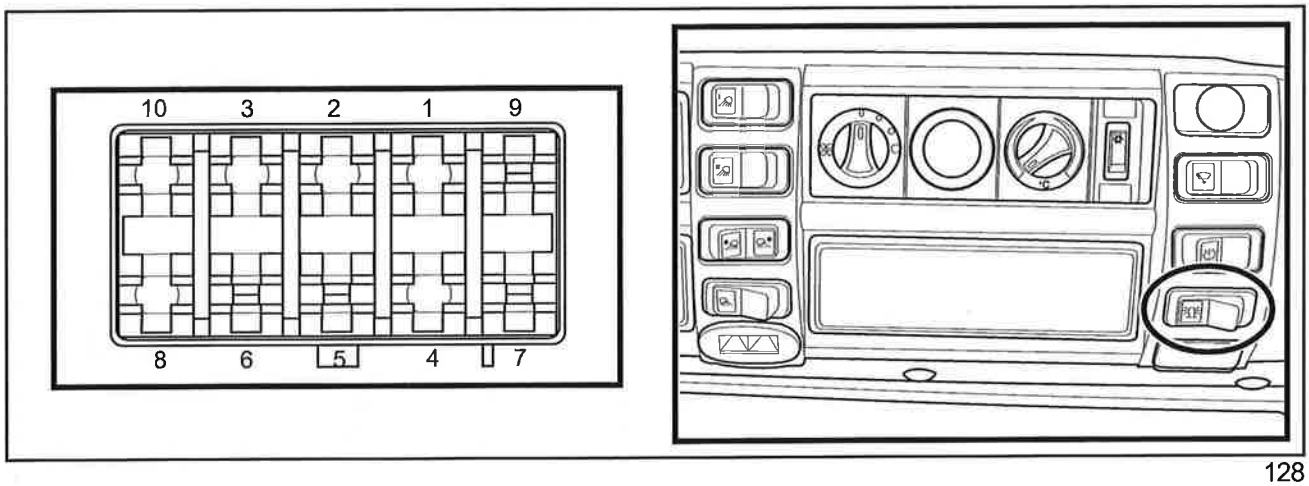

128

	CAVITY	WIRE	LINKED TO CONNECTOR
C120 - Beacon light (LMP001)	1 2	7043 Purple 9062 Black	C101-5 C282 (Black)

Located in the cabin's roof

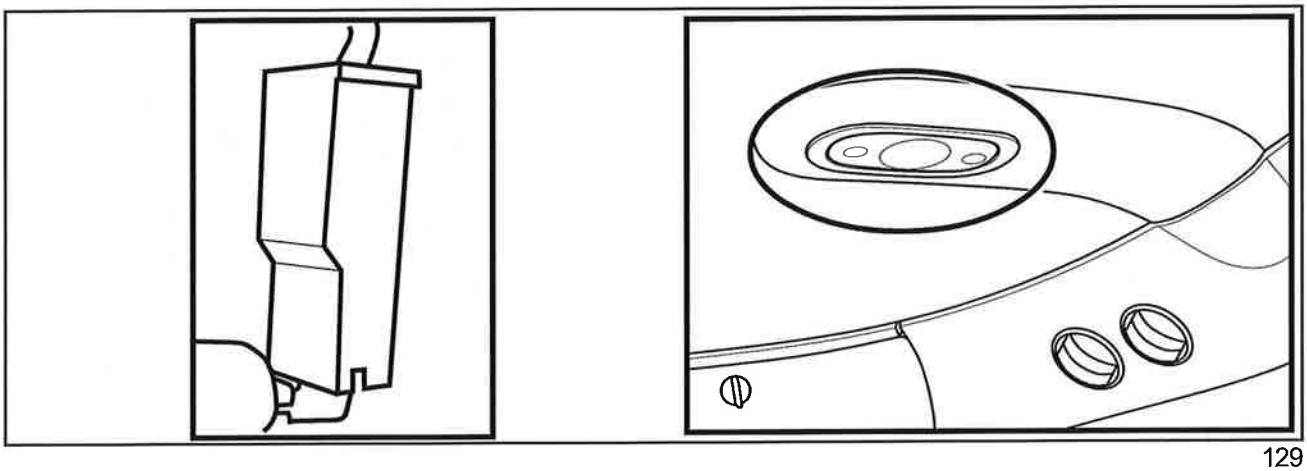

129

	CAVITY	WIRE	LINKED TO CONNECTOR
Connector C121 - Cabin light (LMP002)	1	1045 Red	C047-28
Connector C122 - Cabin light (LMP002)	1	9065 Black	C282 (Ground)
Connector C123 - Cabin light (LMP002)	1	7045 Blue	C048-1

CABIN HARNESS (87697207) (Continued)

Located in the cabin's roof, right side

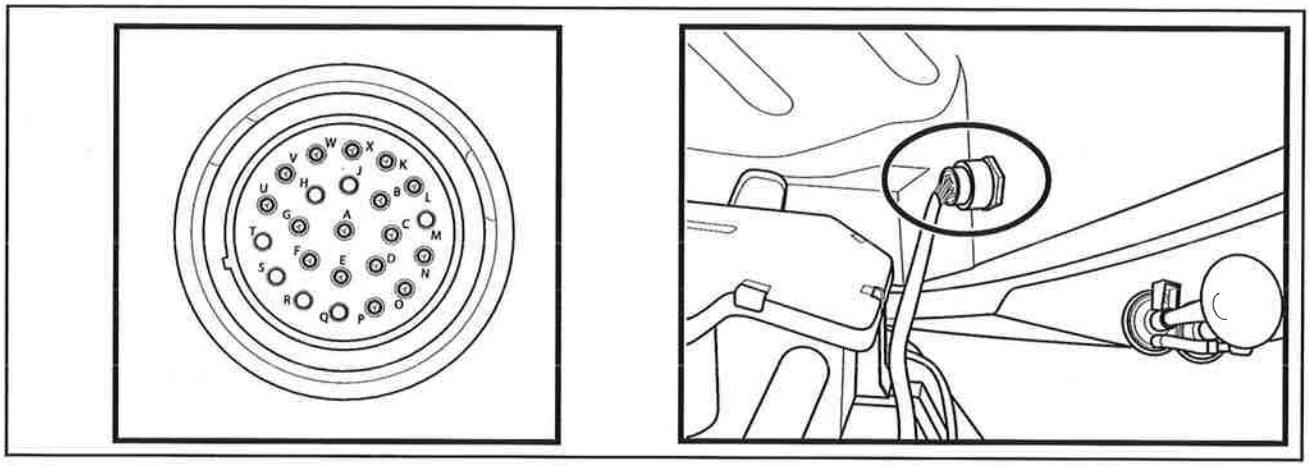

130

	CAVITY	WIRE	LINKED TO CONNECTOR
Connector C011 - Cabin roof, horn, and GPS lamps	A	7259 Purple	C087-3
	B	7261 Purple	C087-4
	C	7199 Purple	C051-6
	D	9198 Black	C282 (Ground)
	E	9196 Black	C282 (Ground)
	F	7195 Purple	C410-4
	G	7196 Purple	C410-5
	K	9084 Black	C282 (Ground)
	L	9088 Black	C282 (Ground)
	N	9092 Black	C282 (Ground)
	O	7093 Purple	C056-3
	P	7084 Purple	C054-3
	U	7117 White	C409-15
	V	7117 White	C409-15
	W	9108 Black	C282 (Ground)
	X	9194 Black	C282 (Ground)

CABIN HARNESS (87697207) (Continued)

Located in the cabin's roof, front side

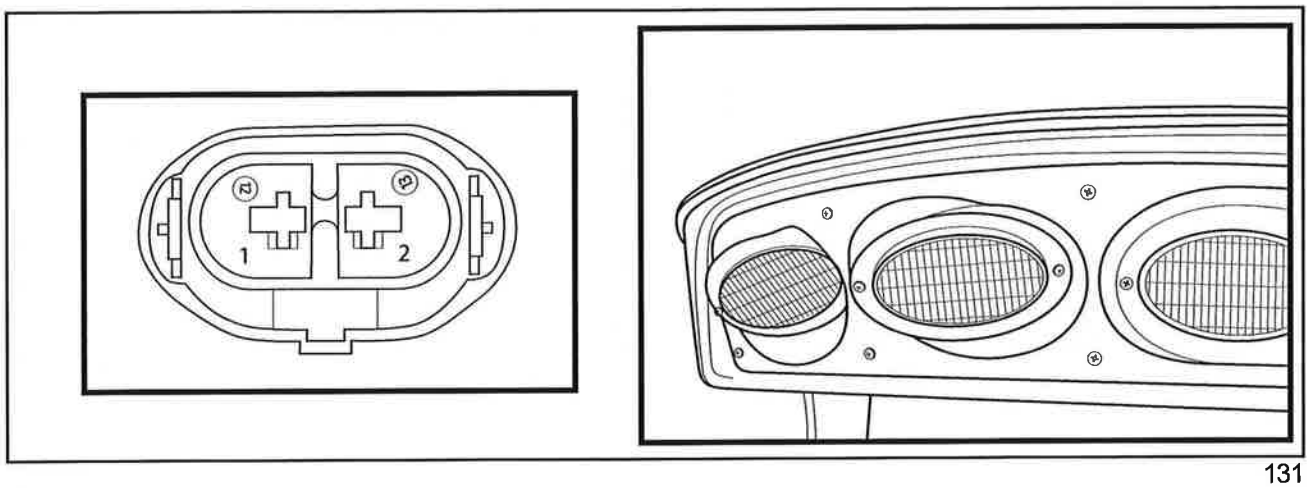

131

	CAVITY	WIRE	LINKED TO CONNECTOR
Connector C131 - Inner work lamp, left side (LMP011)	1 2	7085 Purple 9083 Black	C011-P C011-K
Connector C133 - Mid work lamp, left side (LMP013)	1 2	7094 Purple 9087 Black	C011-O C011-L
Connector C135 - Outer work lamp, left side (LMP015)	1 2	7099 Purple 9091 Black	C011-A C011-N
Connector C132 - Inner work lamp, right side (LMP012)	1 2	7085 Purple 9083 Black	C011-P C011-K
Connector C134 - Mid work lamp, right side (LMP014)	1 2	7094 Purple 9087 Black	C011-O C011-L
Connector C136 - Outer work lamp, right side (LMP016)	1 2	7100 Purple 9091 Black	C011-B C011-N

CABIN HARNESS (87697207) (Continued)

Located in the cabin's roof, rear side

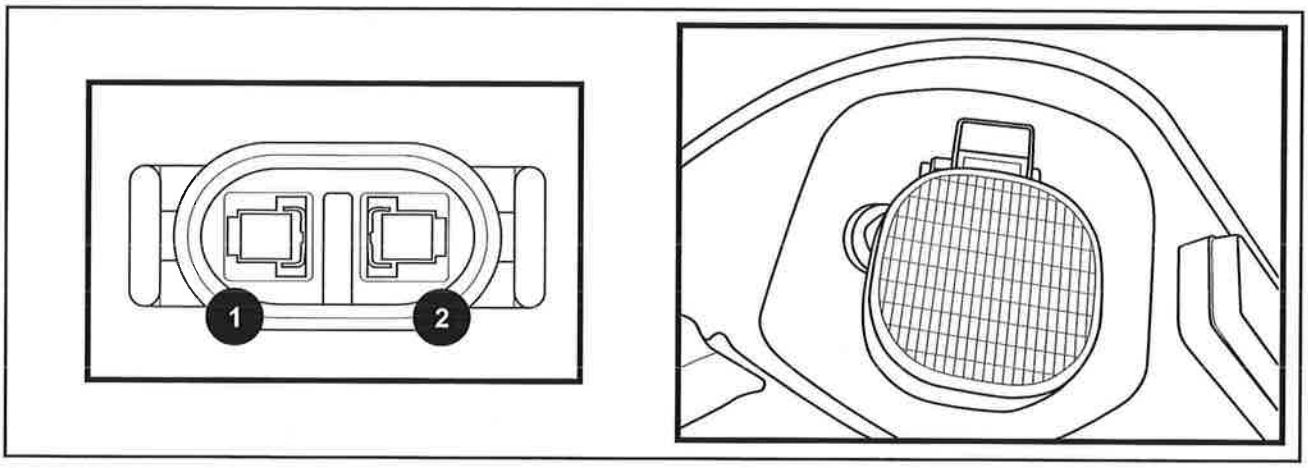

132

	CAVITY	WIRE	LINKED TO CONNECTOR
Connector C125 - Rear work lamp, right side (LMP004)	1 2	7067 Purple 9197 Black	C011-C C011-D
Connector C124 - Rear work lamp, left side (LMP003)	1 2	7067 Purple 9197 Black	C011-C C011-D

Located in the cabin's roof, lateral side

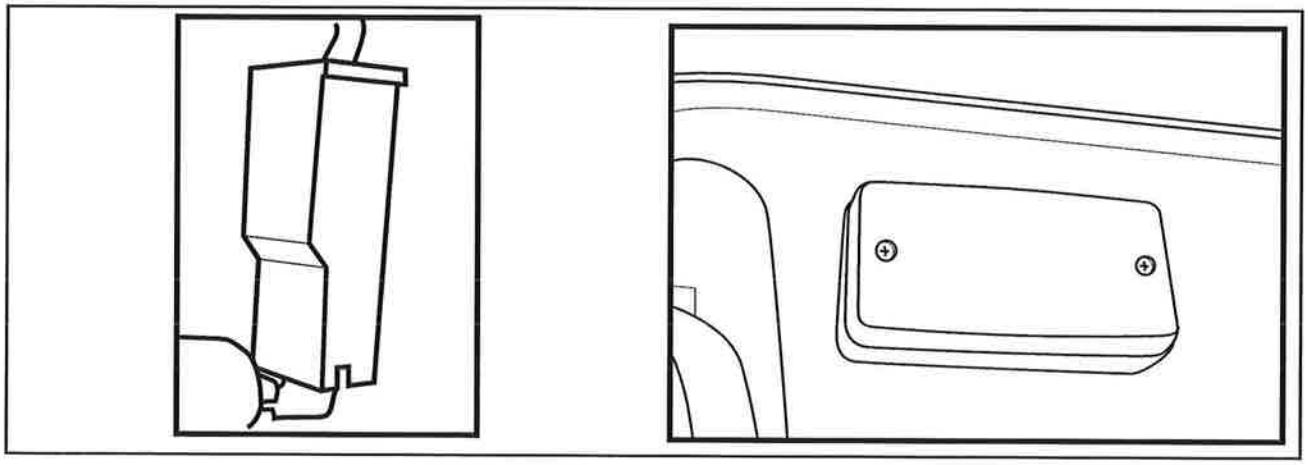

133

	CAVITY	WIRE	LINKED TO CONNECTOR
Connector C140 - Direction indicator lamp, left side (LMP020)	1	7113 Purple	C011-F
Connector C142 - Direction indicator lamp, left side (LMP020)	1	9195 Black	C011-E
Connector C141 - Direction indicator lamp, right side (LMP021)	1	7115 Purple	C011-G
Connector C143 - Direction indicator lamp, right side (LMP021)	1	9195 Black	C011-E

CABIN HARNESS (87697207) (Continued)

Located in the cabin's roof, front side

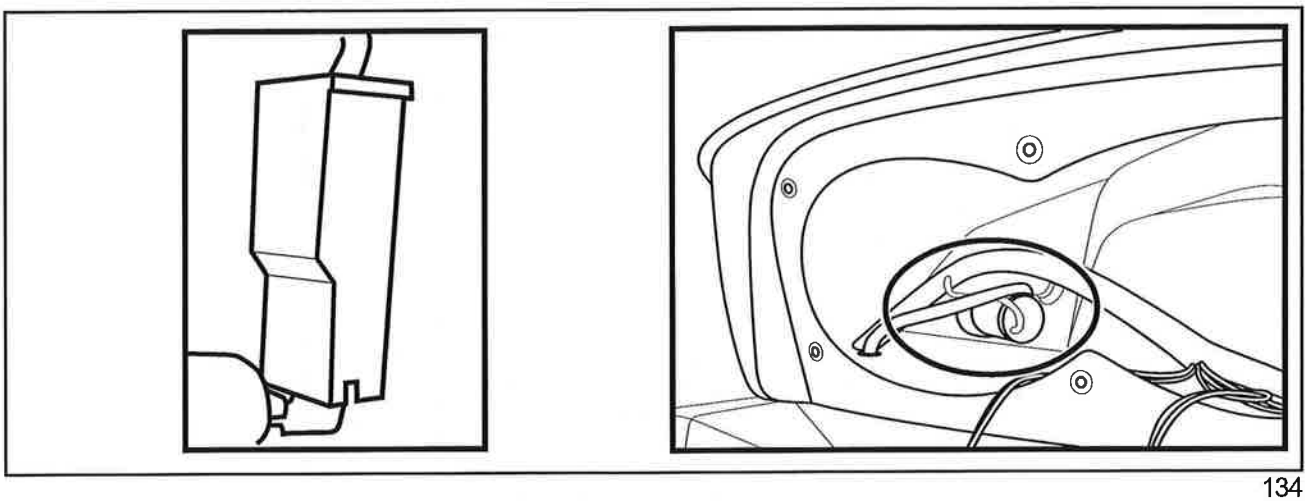

134

	CAVITY	WIRE	LINKED TO CONNECTOR
Connector C160 - Horn (M011)	1	7193/7194 White	C011-U / C011-V
Connector C161 - Horn (M011)	1	9192 / 9193 Black	C011-W / C011-X

NOTE: *The access is given through the removal of the headlamps set.*

CONSOLE HARNESS

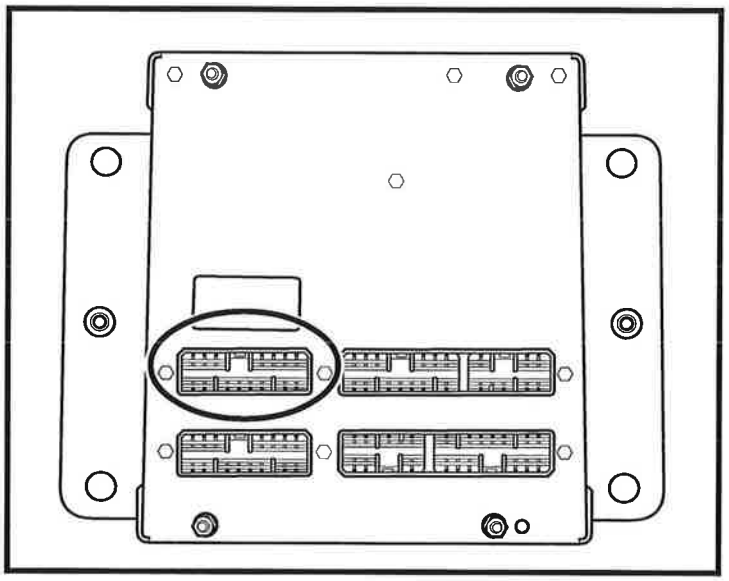

135

	CAVITY	WIRE	LINKED TO CONNECTOR
Connector RHM JP1	1	Green	C025-9
	2	Yellow	C025-8
	3	Blue	C025-11
	4	Orange	C025-3
	5		
	6	Black	C025-12
	7	Black	C025-12
	8	Blue	Speaker
	9	White	Speaker
	10	Green	C025-19
	11	Yellow	C025-18
	12	Red	C025-10
	13	Red	C025-2
	14		
	15	Black	Home/Esc
	16	Pink	Encoder - 1

CONSOLE HARNESS (Continued)

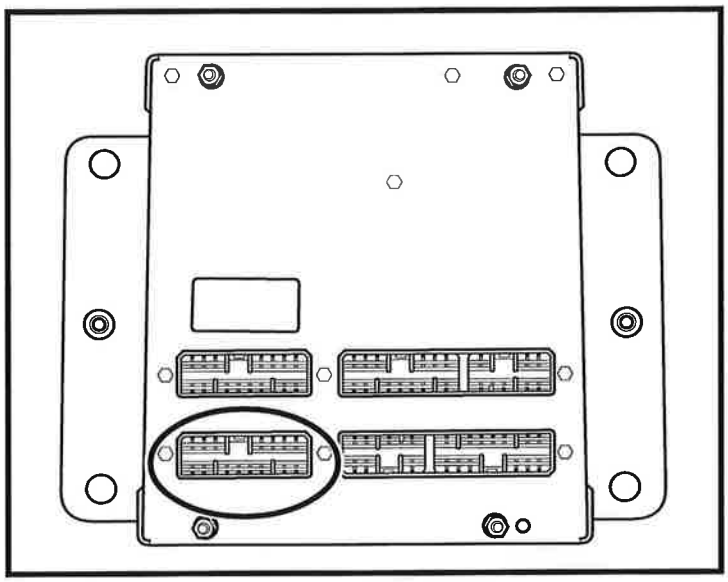

136

	CAVITY	WIRE	LINKED TO CONNECTOR
Connector RHM JP2	1	Yellow	Switch 23
	2	Yellow	Switch 23
	3	Yellow	Switch 25
	4	Yellow	Switch 25
	5	Yellow	Switch 24
	6	Yellow	Switch 24
	7		
	8		
	9		
	10	Purple	Switch 23
	11	Purple	Switch 23
	12	Yellow	Switch 25
	13	Yellow	Switch 25

CONSOLE HARNESS (Continued)

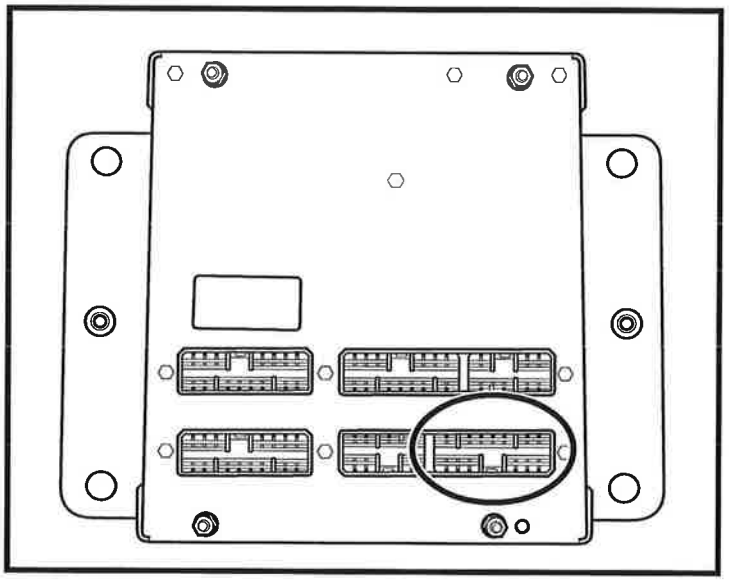

137

	CAVITY	WIRE	LINKED TO CONNECTOR
Connector RHM KN1 - A	1	Yellow	Switch 21
	2	Yellow	Switch 20
	3	Yellow	Switch 19
	4	Yellow	Switch 17
	5	Yellow	Switch 14
	6	Yellow	Switch 12
	7	Yellow	Switch 10
	8		
	9	Yellow	Switch 21
	10	Yellow	Switch 20
	11	Yellow	Switch 19
	12	Yellow	Switch 17
	13	Yellow	Switch 16
	14		
	15	Yellow	Switch 14
	16	Yellow	Switch 12
	17	Yellow	Switch 10
	18	Yellow	Switch 8

CONSOLE HARNESS (Continued)

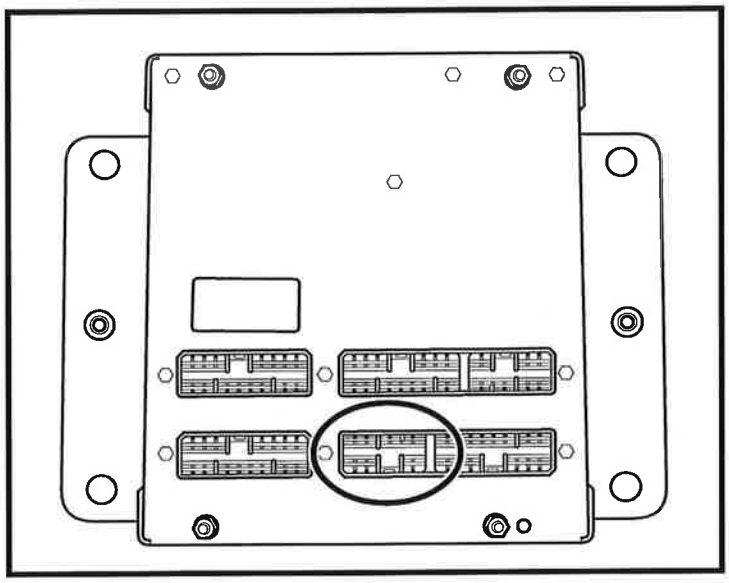

138

	CAVITY	WIRE	LINKED TO CONNECTOR
Connector RHM KN1 - B	1	Yellow	
	2	Yellow	Switch 9
	3	Yellow	Switch 6
	4	Yellow	Switch 3
	5	Yellow	Switch 2
	6	Yellow	
	7		
	8	Yellow	
	9	Yellow	Switch 4
	10	Yellow	Switch 4
	11	Yellow	Switch 3
	12	Yellow	Switch 2

CONSOLE HARNESS (Continued)

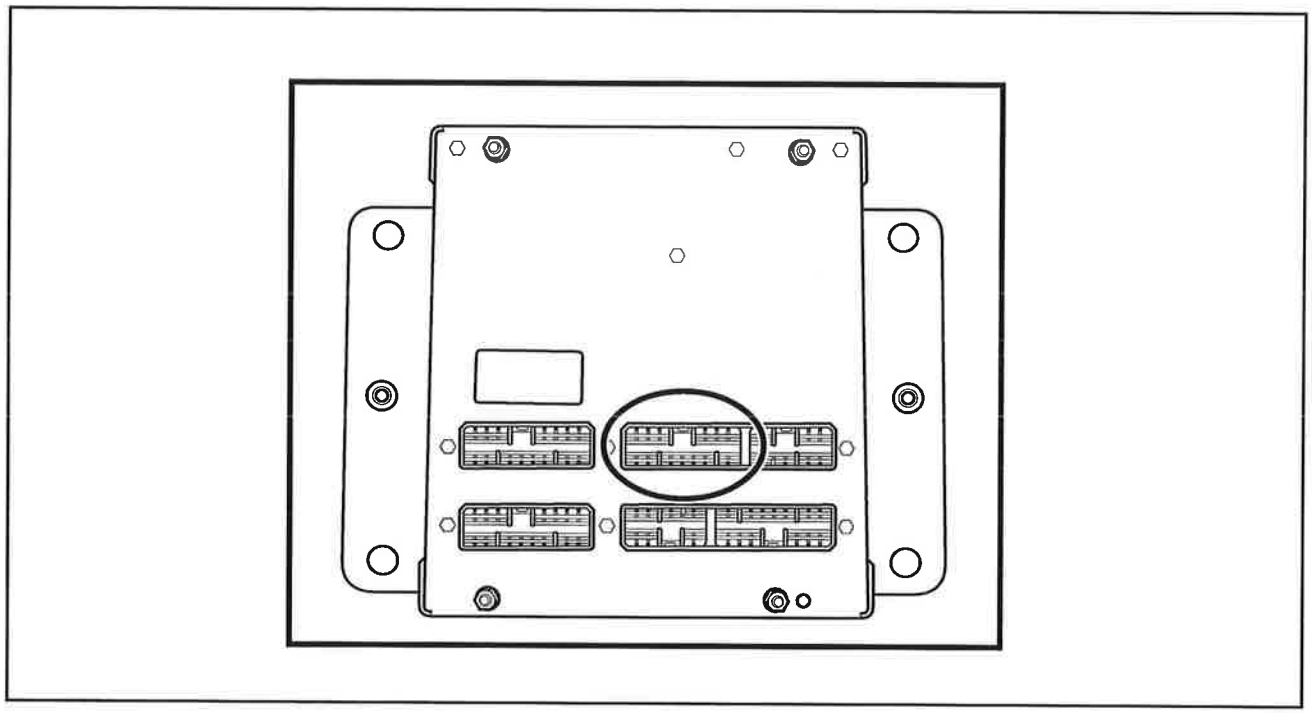

139

	CAVITY	WIRE	LINKED TO CONNECTOR
Connector RHM KN2 - A	1		
	2		
	3		
	4		
	5		
	6	Purple	Switch 11
	7	Yellow	Switch 13
	8	Yellow	Switch 11
	9		
	10		
	11		
	12	Purple	Multifunctional lever
	13		
	14		
	15		
	16		
	17	Purple	Switch 9
	18	Purple	Switch 13

CONSOLE HARNESS (Continued)

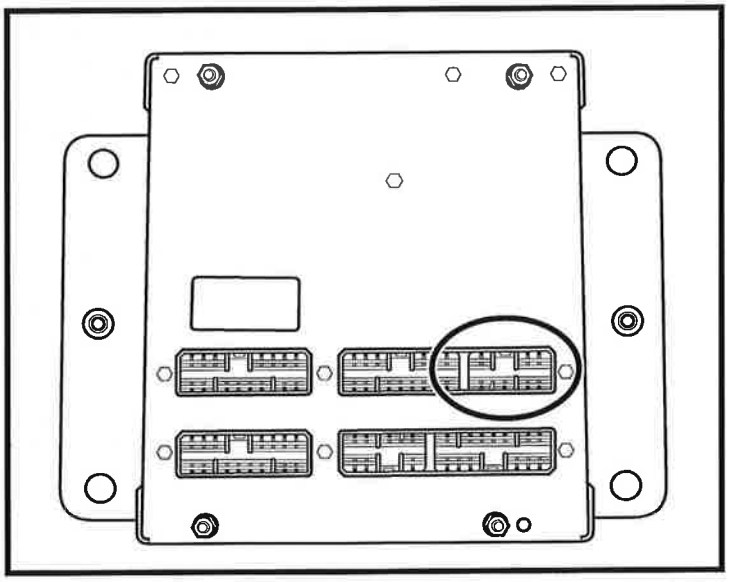

140

	CAVITY	WIRE	LINKED TO CONNECTOR
Connector RHM KN2 - B	1	Orange	Multifunctional lever
	2	Red	Multifunctional lever
	3		
	4	Black	Multifunctional lever
	5	White	Multifunctional lever
	6	Black	Multifunctional lever
	7	Yellow	Multifunctional lever
	8	Black	Multifunctional lever
	9	Black	Multifunctional lever
	10	Brown	Multifunctional lever
	11	Red	Multifunctional lever
	12	Black	Multifunctional lever

MACHINE GROUNDING POINTS

GND 1 - Located under the printed circuit board

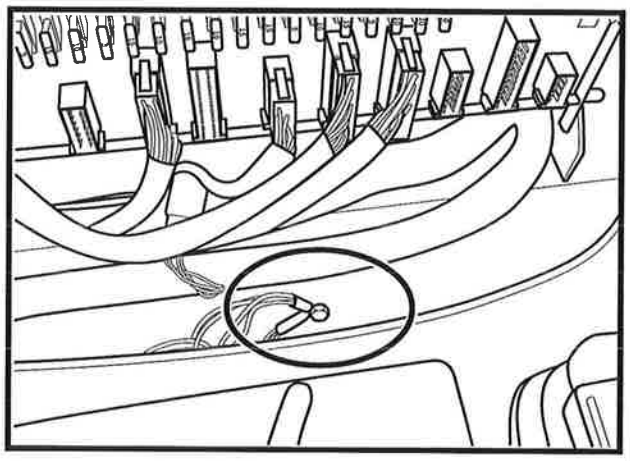

141

GND 2 - Located above the cabin roof, right side

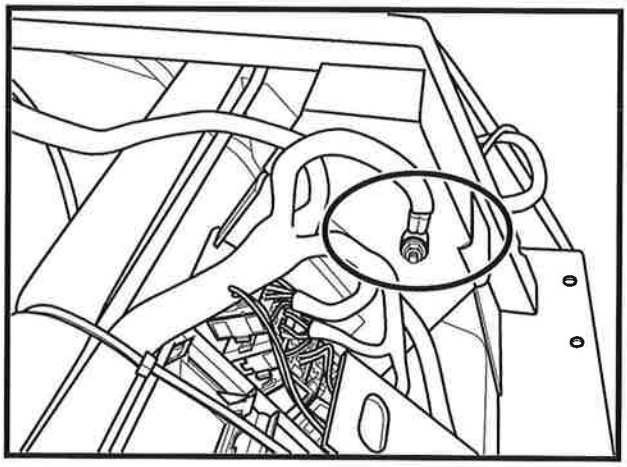

142

GND 3 - Located in the chassis' left side, next to the side trim knife control

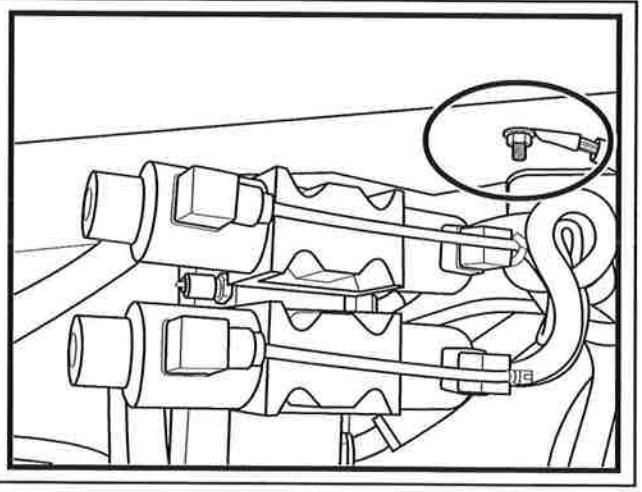

143

GND 4 - Located in the engine's front side, with access by under the cabin

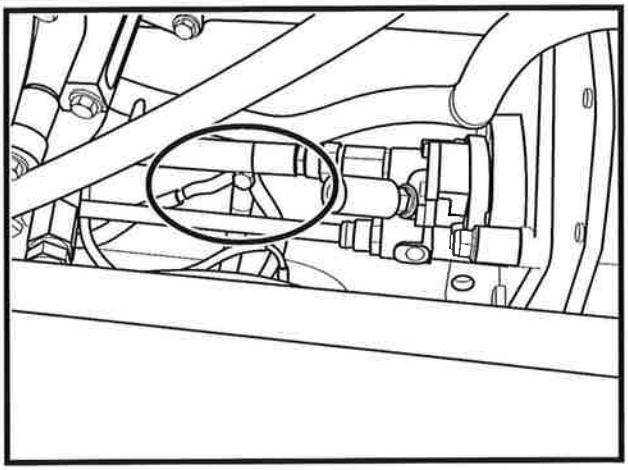

144

GND 5 - Located in the chassis' left side, under the chopper motors

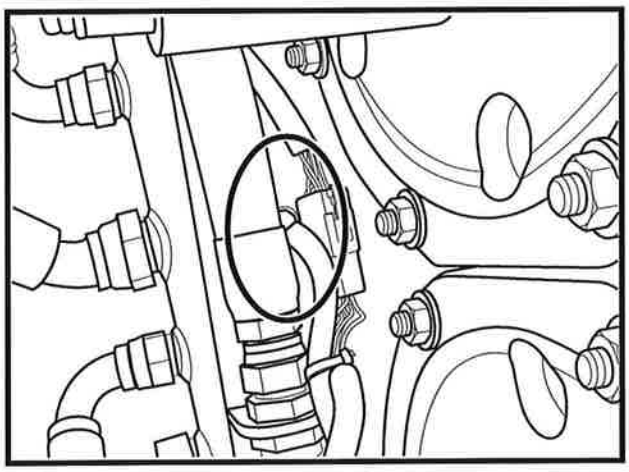

145

GND 6 - Located in the elevator's upper side, next to the elevator control

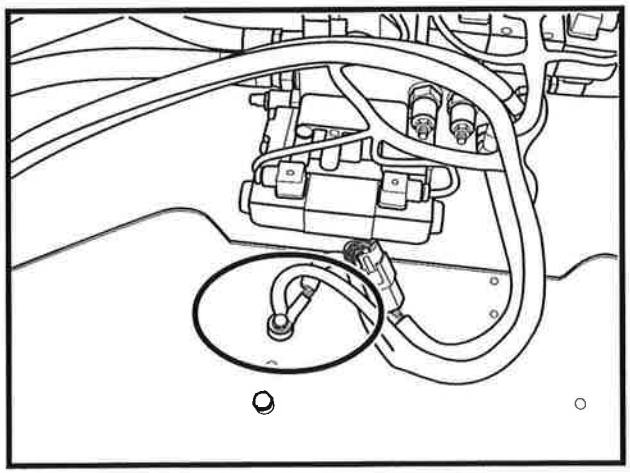

146

GND 7 - Located in the chassis's right side, above the main control

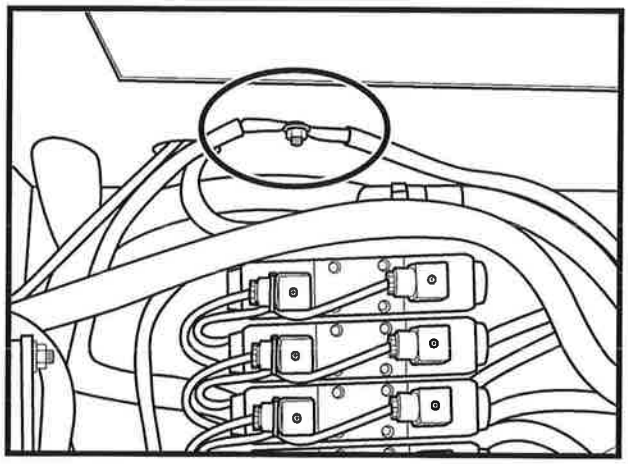

147

GND 9 - Located on the engine mount fastening bolt

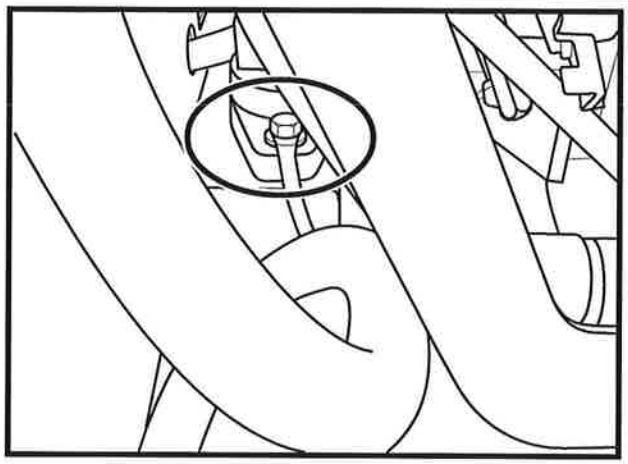

148

GND 10 - Located under the cabin

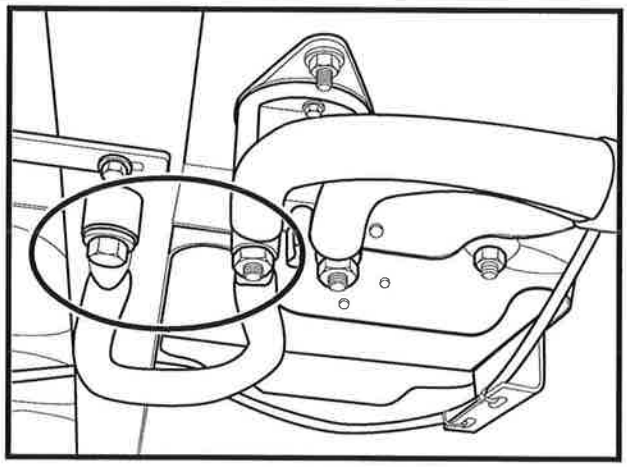

149

GND 11 - Located under the cabin, next to the rear right mount

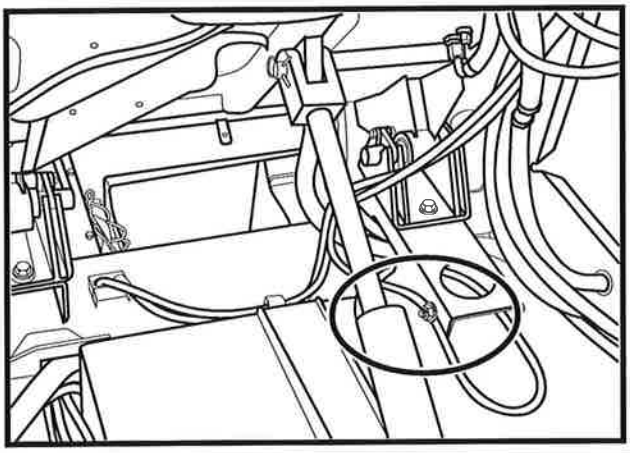

150

SECTION 04 - ELECTRIC SYSTEMS

Chapter 3 - Detection and Troubleshooting of Electrical Problems, Procedures

CONTENTS

Section	Description	Page
04	Introduction	3
	Wiring harness repair	4
	Wiring harness temporary repair	4
	Wiring harness wire replacement	5
	The digital multimeter	7
	Electrical testing procedures	10
	Circuit components - Description and basic tests	13
	Fuses	13
	Relays	17
	Connectors	18
	Resistance devices	19
	Fluid level transmitter	19
	Potentiometers	19
	Electro-magnetic devices	20
	Relays	20
	Solenoids	22
	Solenoid valves PWM	22
	Electronic modules (SCM)	23
	Sensors	25
	Temperature sensors	25
	Pressure transmitter	25

INTRODUCTION

Test basis of an electrical system

The detection and troubleshooting, and the location of electrical system errors must always be performed in a planned and logical sequence. Many errors related to electronic components are usually diagnosed in a quick way, which results in the replacement of expensive components. Some minutes more to check the apparent error will result in a more positive and cheaper repair.

The display is used to indicate, in coded format, any malfunctioning detected in the electronic and electrical systems. Two different coded formats are used to indicate troubles, alarms and errors.

An alarm is the indication of some mechanical problem in the vehicle, and warns the operator to perform the required maintenance, or to change operational conditions in order to correct the alarm condition. Some examples of alarm are those that indicate the engine overheating, blocked filters, or improper control operations. The alarms are used to indicate errors in the electrical circuits.

An error is an indication of a failure in a component or electric circuit and warns the operator that the component or circuit is not working anymore. Some examples of error messages include open circuits, short-circuits with the ground or short circuit due to high voltage. These errors are usually resultant from damages in the wiring harness or failure or misadjust in the sensor.

In investigating an electrical problem, the first step is to completely understand the problem. Try to obtain a clear description of the problem with the operator and, if possible, operate the vehicle to confirm it.

The diagnosis procedures of each error code are detailed in this manual.

When the procedure to locate errors requires checking for continuity, the wiring harness visual inspection must be performed before the tests to assure that no obvious mechanical damages have occurred to the wiring harness or connectors.

In some cases, the use of a multimeter will be required to locate the origin of the error. A good quality multimeter, able to measure the voltage, the current, and the resistance of at least 20,000 ohms, is an essential item to perform any error location.

IMPORTANT: *the use of testing lights with power supply or any power of 12 volts to test or activate electrical circuits can result in internal failures in the computer modules.*

Never apply a power supply of 12 volts directly to a solenoid or another device to prevent damage to the harvester electrical system.

When using a multimeter, the good practice recommends selecting a high band and reducing it to prevent damages to the device.

IMPORTANT: *Take care when you are using the multimeter. Use only the equipment according to the instructions in order to prevent damages to the harvester microprocessors internal components. When checking the wiring harness, the sensors and switches continuity, it is required to insulate the harvester modules and assure that the key switch is OFF in order to prevent possible damages. The key switch must only be turned ON and the harvester modules connected where there are specific instructions in the procedures for the error location.*

During the errors location, it will be usually required to disconnect the connectors in order to perform an inspection or to allow access to the test. By using the harvester integrated diagnosis to locate the failure origin, it is usually necessary to disconnect the connectors according to the instructions included in the error location procedures. Unless there are specific instructions, the connectors must not be tested using test tools to prevent damages to the connectors and to the wires sealing.

⚠ CAUTION ⚠

Never connect or disconnect electrical connectors with the engine running in order to prevent damages to the machine or personal injury due to electrical chock.

⚠ WARNING ⚠

In order to prevent personal injury, never attempt to access the electrical connectors under the cabin with the engine running. The accidental contact with the straw elevator angle sensor or the inappropriate access to the modules electrical circuits can cause the elevator to unexpectedly move, resulting in personal injury or death.

If the connectors' cleaning is required, a contact spray must be used. DO NOT USE ANY OTHER METHOD TO CLEAN THE TERMINALS. Do not use a cleaner that contains trichloroethylene; this solvent causes damages to the connector's plastic body. The use of a Freon T.F. base cleaner is preferable.

REPAIRS IN THE WIRING HARNESS

Wiring harness temporary repair

The following repair method is recommended only for temporary nature. The wiring harness must be replaced as soon as possible. Do not attempt to repair the wiring of any sensors of the system, since these are sealed and only must be replaced by new components.

NOTE: *When performing repairs in the cables, it is important to use only WELDING WITH RESIN NUCLEUS. The use of any other type of welding can result in more damages to the cable.*

To perform a temporary repair, proceed as follows:

1. Locate the damaged portion in the cable and cut the external protection cover in both sides of the damaged area.

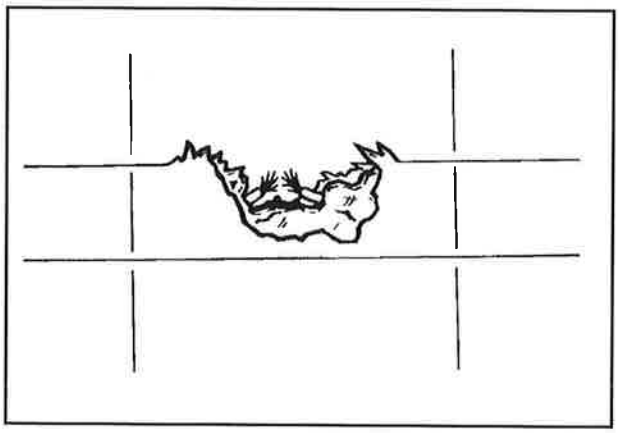

1

2. Remove the cable from both edges of the damaged area and carefully cut the internal cable cover in the damaged area and cut a strip of approximately 13 mm (1/2 inch) from the wires insulation. Do not cut the wires.
3. Using a proper solvent, clean about 50 mm (2 inches) in each end of the cover. Clean the gray cover of the cable and the individual wires.
4. Wrap two uncoated wires to each damaged wire, taking care to mach the wires colors and, then, weld the wires using a welding with resin nucleus. Insulate each repaired wire with vinyl isolating tape.

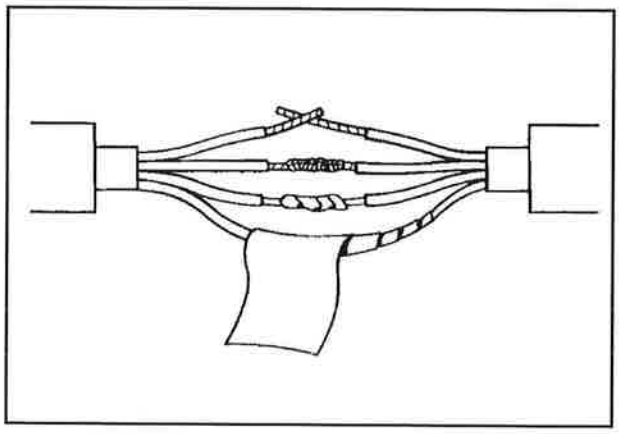

2

5. Wrap a layer of vinyl insulation tape until covering the cable's gray cover in each end of the repaired section. Make a paper groove and, then, apply a compound of silicon rubber (non-solidifying sealant) in the repaired section until the cover edges.

   A quantity of sealant enough to fulfill the cut area edges must be used.

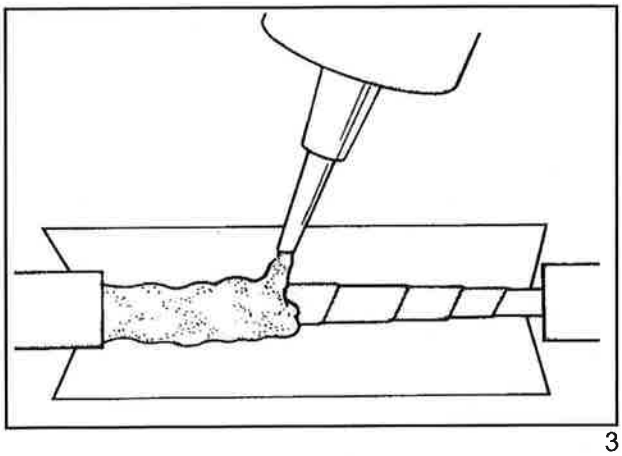

3

6. Allow the compound to harden and, then, cover the area with insulation tape far beyond each repaired area. An overlap of at least 50 mm (2 inches) of tape is required in each edge.
7. Check to assure that the repair is adequate and attaches the repaired cable to prevent the damages to repeat.

   NOTE: *It is only a temporary repair. Make sure that the damaged cable is replaced as soon as possible in order to prevent water or chemical products to enter in it.*

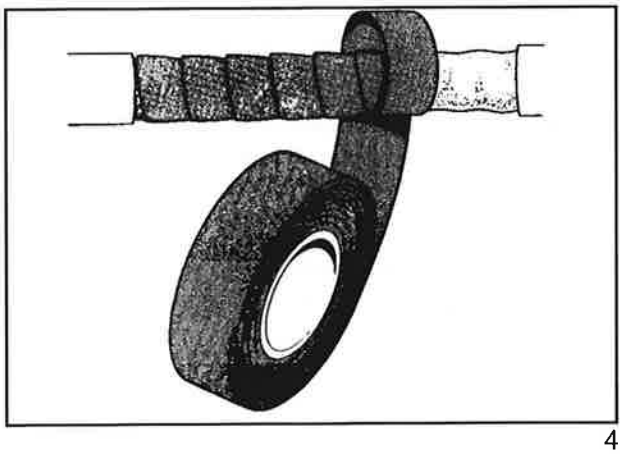

4

Wiring harness wire replacement

If a wire inside the wiring harness does not have any conditions to be repaired or it is an open circuit, a connecting wire can be installed as a temporary repair until a new wiring harness set can be installed. Use the following procedure to install an additional wire:

1. Locate the defective wire using the procedures described in the error code tables:
2. Disconnect the affected connectors.
3. If it is installed, roll it carefully behind the sealing between the connector and the harness external cover.
4. Remove the pins from the connector blocks of the affected wire using the proper tool to remove it.

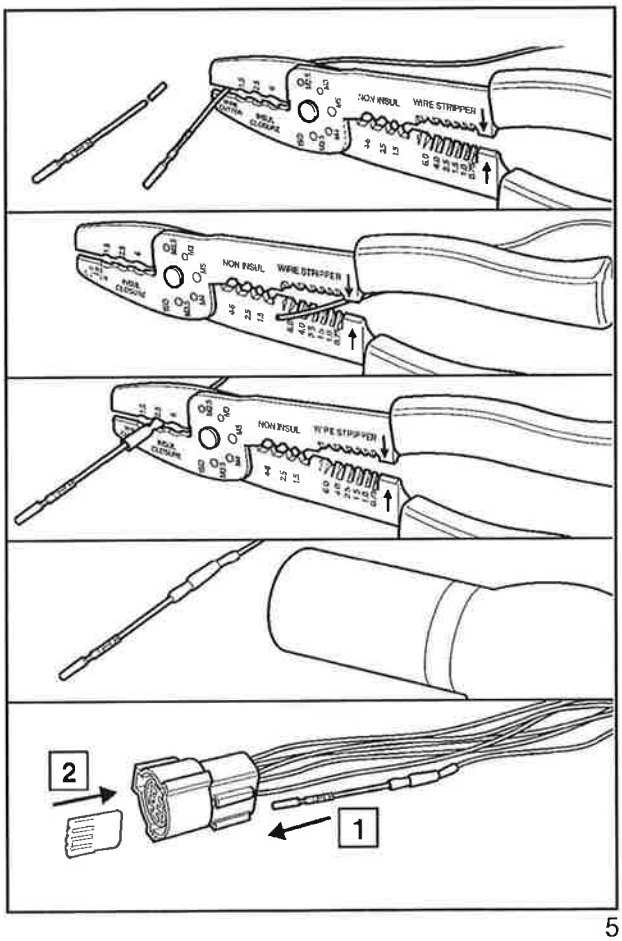

5

5. Select the correct pin for the connectors of the wiring harness repair kit. Locally obtain the wire with the correct crossed section and measure the required length to follow the wiring harness routing.
6. Joint the new wire to the new connectors according to what is described in the wiring harnesses repair kit and install one of the pins in its connector.
7. If possible, try to pass the new wire inside the existing wiring harness external cover; if it is not possible, pass the wire through the wiring harness side, attaching it with regular intervals with proper attachment.

   With the correct wire routed, install the second terminal in its connector block.

   Put the sealing back in the connector if it was removed.
8. To assure that the repair was effective, check to see the continuity of the new wire using a proper multimeter.

   NOTE: *It is only a temporary repair. Make sure that the damaged cable is replaced as soon as possible in order to prevent water or chemical products to enter in it.*

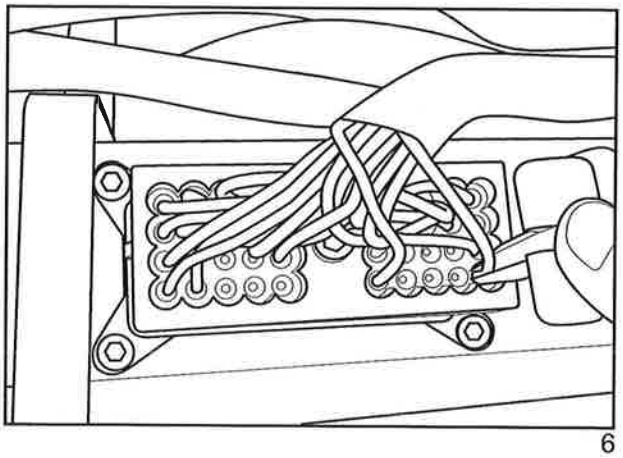

6

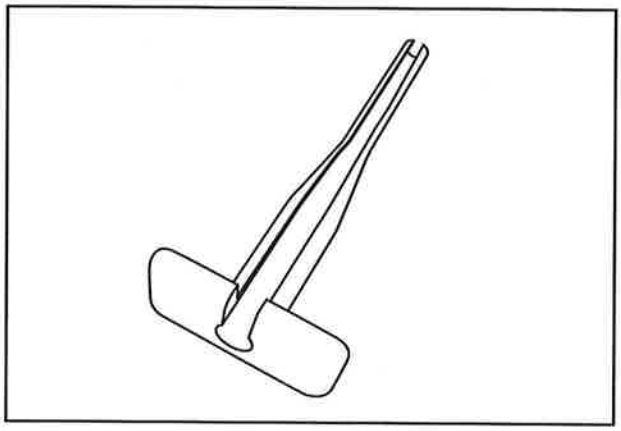

7

THE DIGITAL MULTIMETER

NOTE: *This section was designed only as a general guide to the use of a digital multimeter. Always check the manufacturer's operator guide for the proper operation.*

A multimeter is a device for electronic measurement. The different types of measurement that can be performed depend on the multimeter brand and model. Most multimeters are able to measure:

- AC or DC current (A).
- Resistance (&!)
- AC or DC voltage (V).
- Continuity (Buzz test).

The most expensive multimeters have other functions, such as the ability to measure the frequency (Hz) and to test diodes.

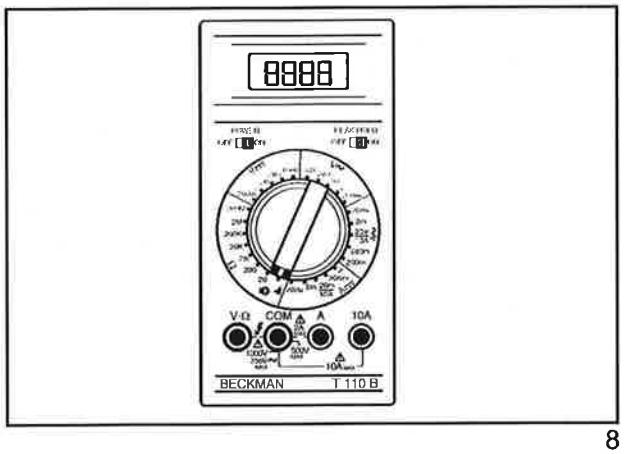

8

General operation:

Before proceeding with the test, decide what will be measured (Voltage, Current, etc.) Turn the button in the dial until the pointer is in the relevant zone. There area different scales within each zone. The scale that is selected will represent the maximum value that the multimeter can read. Always select a scale that is higher than the value you intend to measure. If you are not sure about the value to be measured, always select the highest scale and, then, reduce the scale when you have an idea about the value to be measured.

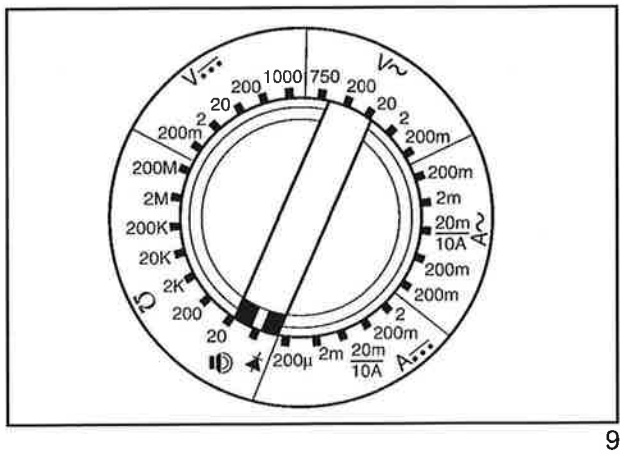

9

Why there are different scales?

The closest the scale is from the measured value, the most accurate the reading will be; for example, if the voltage of a battery is measured with the scale adjusted to 200V, and the display can indicate 12V.

However, if the scale is adjusted to 20V, the display can indicate a more accurate reading of 12.27V.

Giga	G	1,000,000,000	10^{9}
Mega	M	1,000,000	10^{6}
Kilo	K	1,000	10^{3}
milli	m	0.001	10^{-3}
micro	µ	0.000 001	10^{-6}
nano	n	0.000 000 001	10^{-9}
pico	p	0.000 000 000 001	10^{-12}

10

Voltage measurement (Volts):

Adjust the range switch to volts AC or DC.

Connect the black test probe to the "COM" terminal, and the red test probe to the terminal "V/".

Connect the test probes through the component to be measured with the complete circuit (closed).

Perform the reading of the value show in the display.

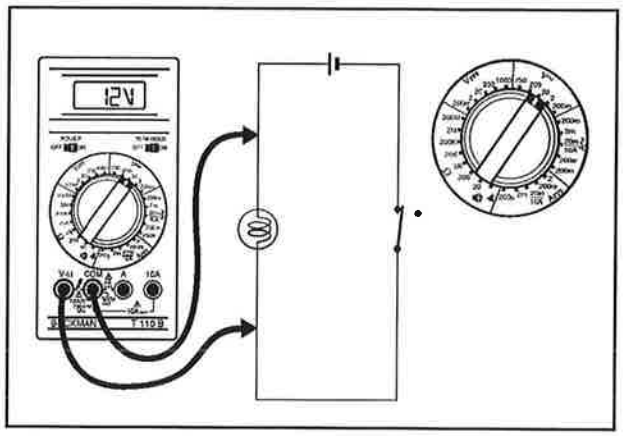

11

Current measurement (Amps):

Adjust the range switch to current AC or DC. When a current of up to 2 amps is measured, connect the red test probe to the terminal "A". When a current of up to 10 amps is measured, connect the red test probe to the terminal "10A".

Always connect the black test probe to the "COM" terminal. When the current is measured, always break the circuit and connect the multimeter in series with the circuit. Perform the reading of the value show in the display.

NOTE: *For protection purposes, the multimeters usually have a fuse of 10A.*

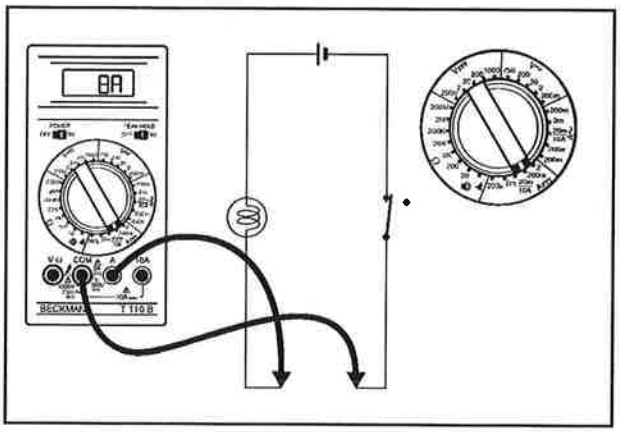

12

Resistance measurement (Ohms):

Adjust the range switch to the desired Q position. Connect the red test probe to the terminal "V/". Connect the black test probe to the "COM" terminal. If the resistance to be measured is connected to a circuit, turn the power supply OFF for the circuit. Connect the test probes to the measurement point and perform the reading of the value in the display.

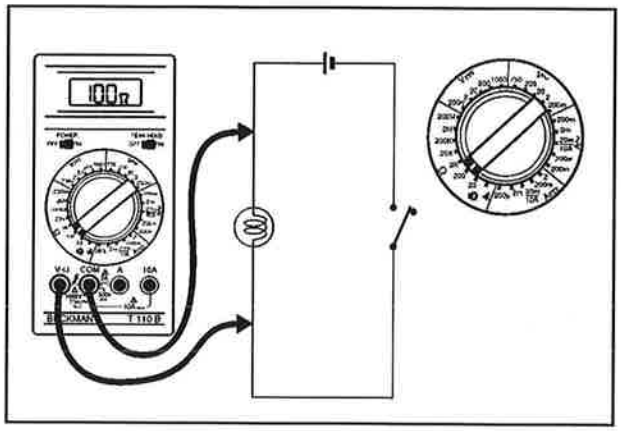

13

Continuity test (Buzz):

Adjust the range switch to the "Buzz" position. Connect the red test probe to the terminal "V/". Connect the black test probe to the "COM" terminal. Connect the test probes to the measurement point. Generally, if the resistance is lower than 50, then a buzz will sound indicating continuity.

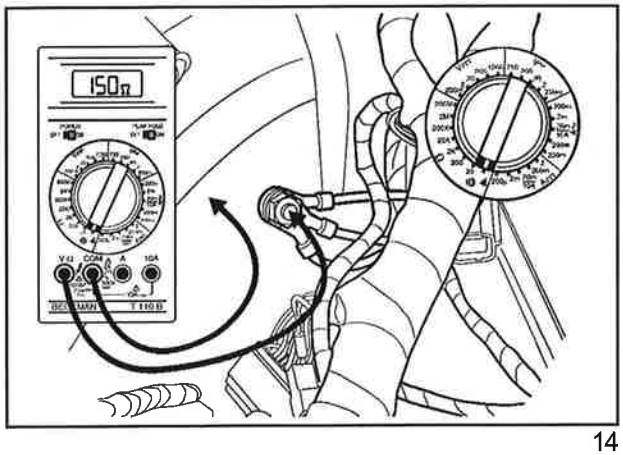

14

NOTE: *The buzzing will sound at different ohm values for different multimeters, depending on the multimeter quality. Frequently it can cause errors. For example, when checking an oxidized point of the ground. A low quality multimeter can sound a buzz at 150W, indicating continuity and no problems. When a multimeter with better quality is used to perform the same test, it would not sound due to the high resistance. When performing the tests, you must always check the value of the resistance, in addition to listening to the buzzing sound.*

A good connection offers low resistance.

A poor connection offers high resistance.

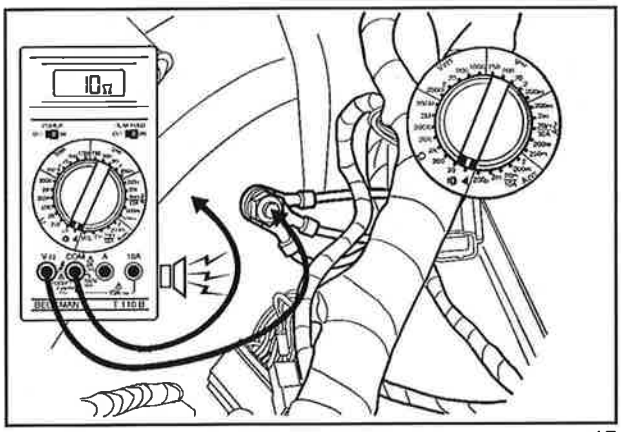

15

SUMMARY:

When you measure —

Voltage (V):

Connect through the component with the circuit closed.

Current (A):

Connect in series with the circuit. Circuit closed.

Resistance (Ω):

Connect through the component with the circuit open.

Continuity (Buzzing):

Connect the multimeter through the component with the circuit open. (Always check the value of the resistance too!!!)

PROCEDURES FOR THE ELECTRICAL TESTS

Four electrical tests will be required to solve properly electrical problem in the harvester.

Each test is described in details: Make sure that all the steps are reviewed and followed when performing the test.

1. Continuity test, short-circuit with the ground
2. Voltage measurement, short-circuit with 12 volts
3. Resistance test in all the components
4. Continuity test, open circuits

PROCEDURE 1 FOR THE ELECTRICAL TEST:

CONTINUITY TEST - SHORT-CIRCUIT WITH THE GROUND

CONDITIONS TO PERFORM THE TESTS:

1. Power supply OFF, key switch OFF (sometimes the battery turned off or a fuse removed, if specified in the procedure).
2. The connectors in each end or edge of the circuit disconnected to prevent false readings.
3. Adjust the multimeter to measure the resistance or ohms, and measure the circuit resistance. Use the black wire to make the contact with the plated metal part in the chassis, as a post for direct start, if installed. Check if the part's surface is not oxidized. Use the multimeter red wire to touch the connector pins, one at a time, and prevent contact with the metal connector box.
4. Determine if the measured resistance is within the guidelines specified in the procedure. 3 to 4 ohms indicates a direct short-circuit to the chassis ground, and it must be located and fixed.

   Usually, the higher resistances indicate circuit routes through modules and that an additional connector must be disconnected to perform the test. More than 100K ohms indicates that the circuit is free of short-circuits to the ground.

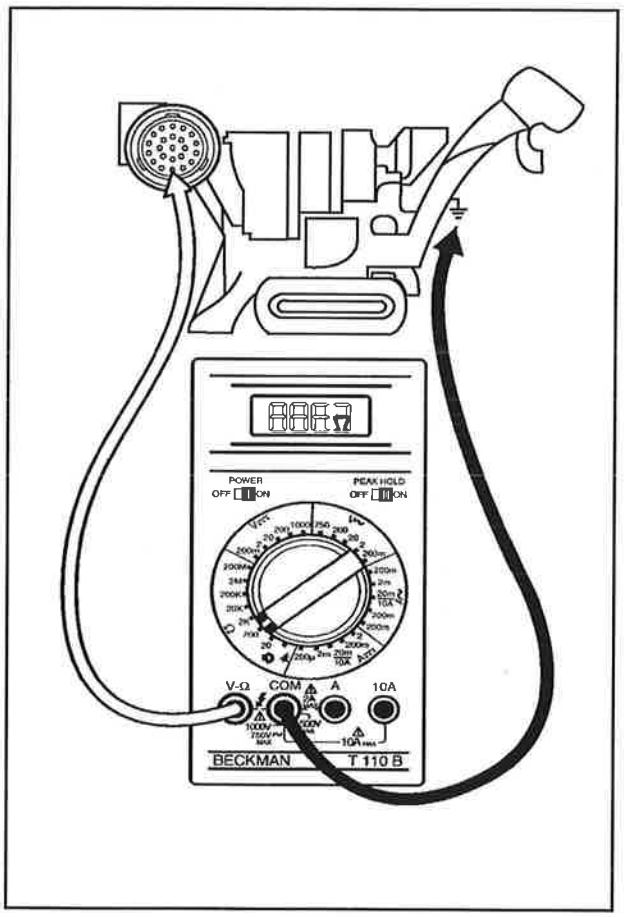

16

PROCEDURE 2 FOR THE ELECTRICAL TEST:

MEASUREMENT OF VOLTAGE OR SHORT-CIRCUIT TO THE VOLTS POSITIVE POWER SUPPLY

CONDITIONS TO PERFORM THE TESTS FOR SHORT-CIRCUIT WITH THE POSITIVE POWER SUPPLY:

1. Ignition key ON (sometimes OFF, if specified in the procedure).
2. Connectors in the sensor, in the switch or in the potentiometer disconnected. All the other connectors must be reconnected to perform the test.
3. Adjust the multimeter to measure VOLTS DC and measure the circuit voltage according to the illustration. Use the multimeter red wire to touch the connector pins, one at a time, and prevent contact with the metal connector box. Use the black wire to make the contact with a plated metal part in the chassis, as a terminal for direct start, if installed. Check if the part's surface is not oxidized.
4. Determine if the measured voltage is within the guidelines specified in the procedure.

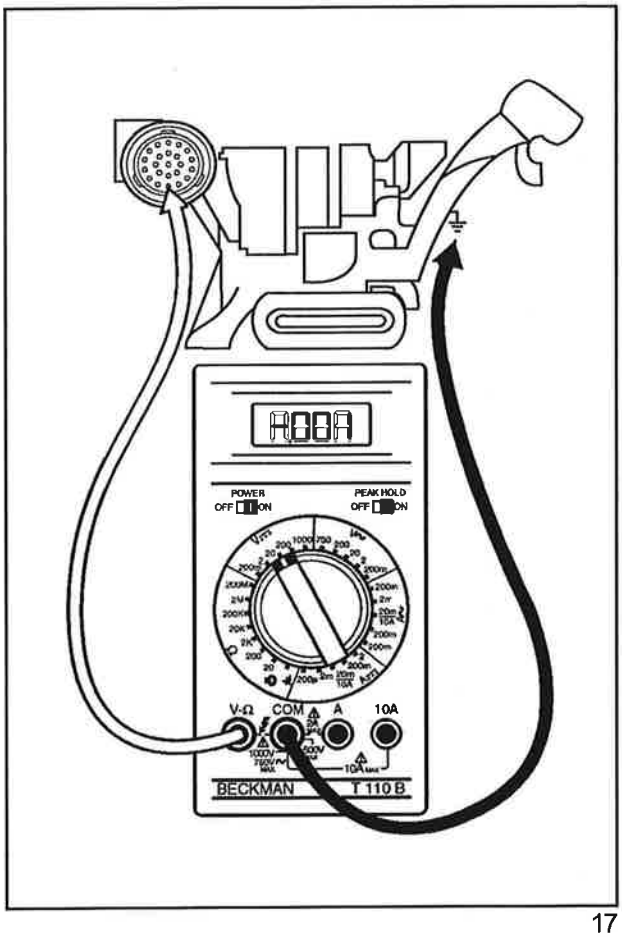

17

PROCEDURE 3 FOR THE ELECTRICAL TEST:

RESISTANCE TEST FOR THE ELECTRICAL PARTS

CONDITIONS TO PERFORM THE RESISTANCE TEST

1. Disconnect the part from the harvester, disconnecting the electrical connectors to expose the connector from set of the part for the test.
2. Adjust the electrical multimeter to measure the resistance or Ohms, and insert the test probes in the connectors of the terminals specified in the procedure. When checking the potentiometers, measure from the wiper terminal to each of the other terminals while you ROTATE THE POTENTIOMETER SHAFT. It will assure that there will be not detection of leaks by open points.

   When checking the two positions or rotating commuters, turn the switch ON when measuring the open and short-circuits.
3. Compare the measured values with the values specified in the procedures for error codes. Allow approximately 5 per cent of range tolerance to all measurements.

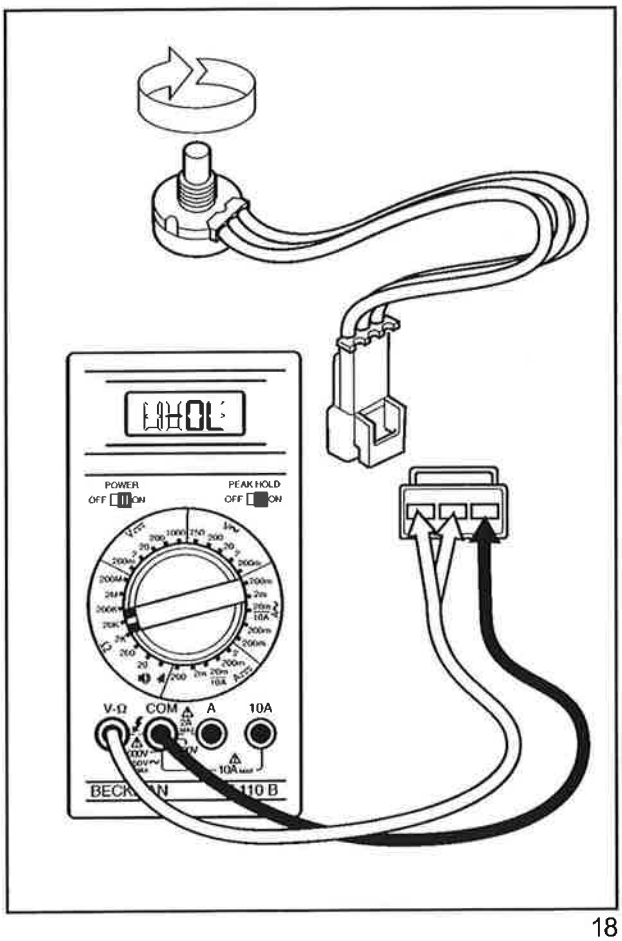

18

PROCEDURE 4 FOR THE ELECTRICAL TEST:

CONTINUITY TEST - CHECK OPEN CIRCUITS

CONDITIONS TO PERFORM THE CONTINUITY TESTS:

1. Switch key OFF (sometimes disconnect the battery or remove the fuses).
2. Connectors of both sides of the circuit disconnected. All the other connectors must be reconnected to perform the test.
3. Adjust the multimeter to measure the resistance or ohms, and measure the circuit resistance according to the illustration.

   Use the multimeter red wire to touch the connector pins, one at a time, and prevent contact with the metal connector box.

   Use the black wire to make the contact with the connector pin in the other end of the circuit.

   Avoid contact with other pins in the connector and with the connector's box, if it is made of metal.
4. Determine if the measured resistance is within the guidelines specified in the procedure.

   If the resistance is higher than 3 to 4 ohms, the circuit is continuous. A higher resistance usually indicates dirty or oxidized terminals in the connectors and 100K ohms indicates an open circuit.

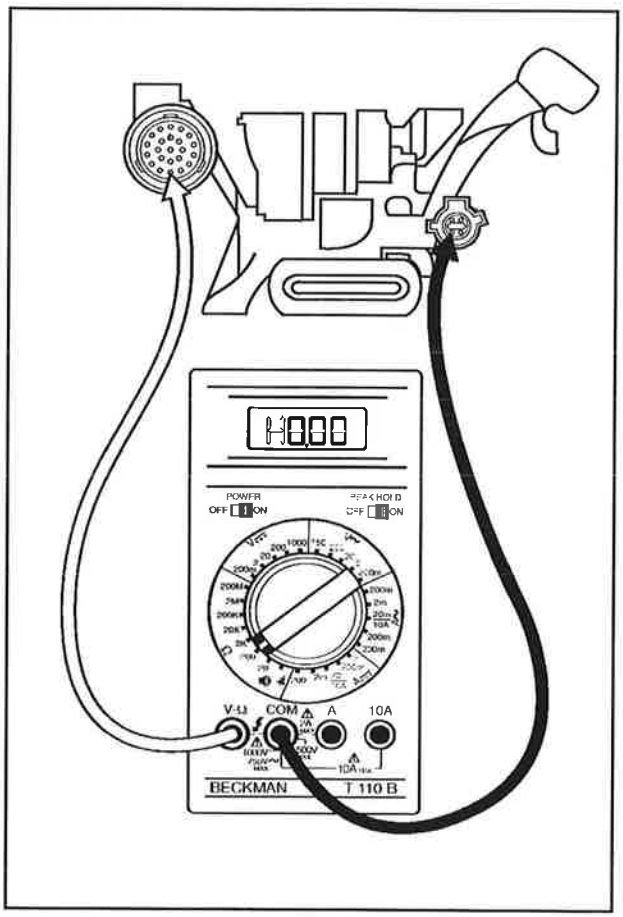

19

CIRCUIT COMPONENTS - DESCRIPTION AND BASIC TESTS

Fuses

The fuses protect the circuits with thin pieces of metal that heat and melt to open the circuit when there is much current flowing through them.

The fuses are used to protect the circuit from overloading. It can occur in the event of a short-circuit or by the connection of equipment that requires a higher current than the projected for the circuit to load.

There are several types of fuses, but all of them consist of a metal conductor that is able to load a limited current. If the specified current is exceeded, then the metal conductor will overheat, causing it to melt and break the circuit. This, then, will cause an open circuit.

The fuse classification is related to the current that the fuse can continuously load.

If the fuse is blown, it just needs to be replaced by another with the correct classification, and, if it blows again, the cause must be, then, checked.

A fuse can be tested checking the continuity through the fuses in the both exposed terminals (1).

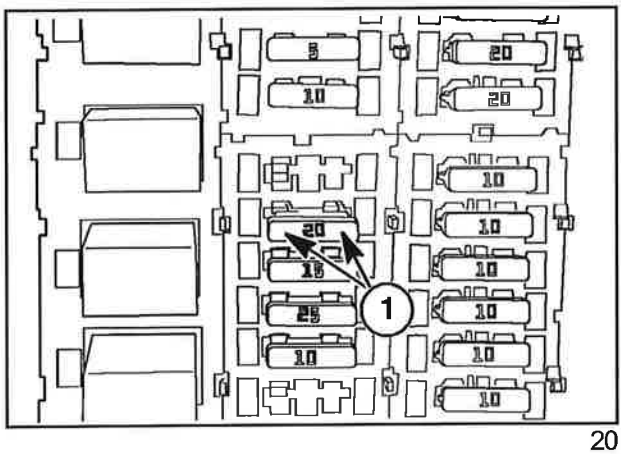

20

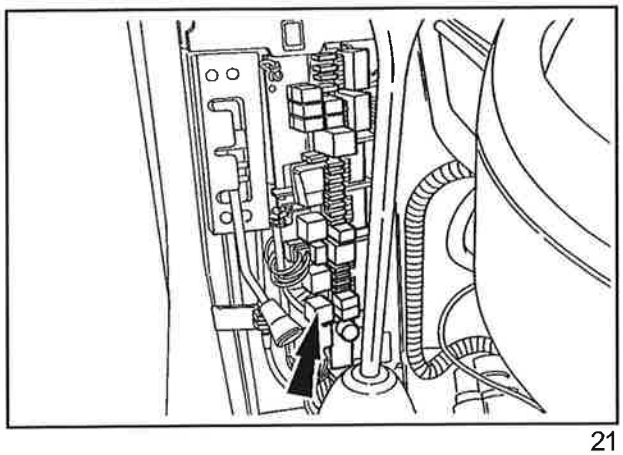
21

Fuse / Relay location and identification

The compartment is located behind the operator's seat. To access the compartment, remove the cover.

NOTE: *To access the components in the compartment, rotate both adjustment buttons of the top buttons.*

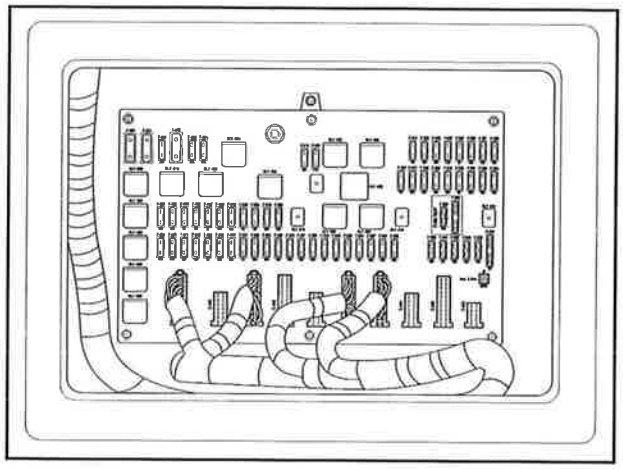

22

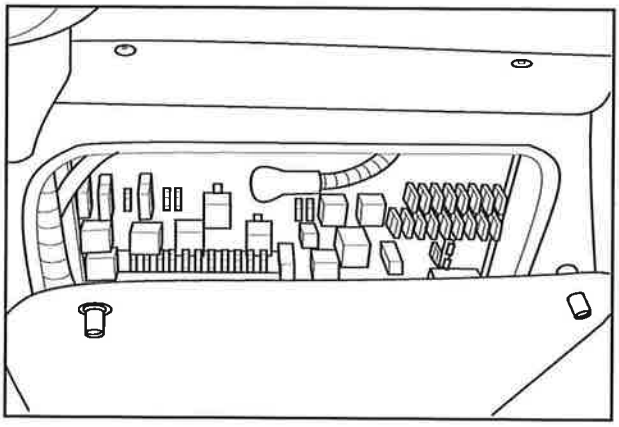

23

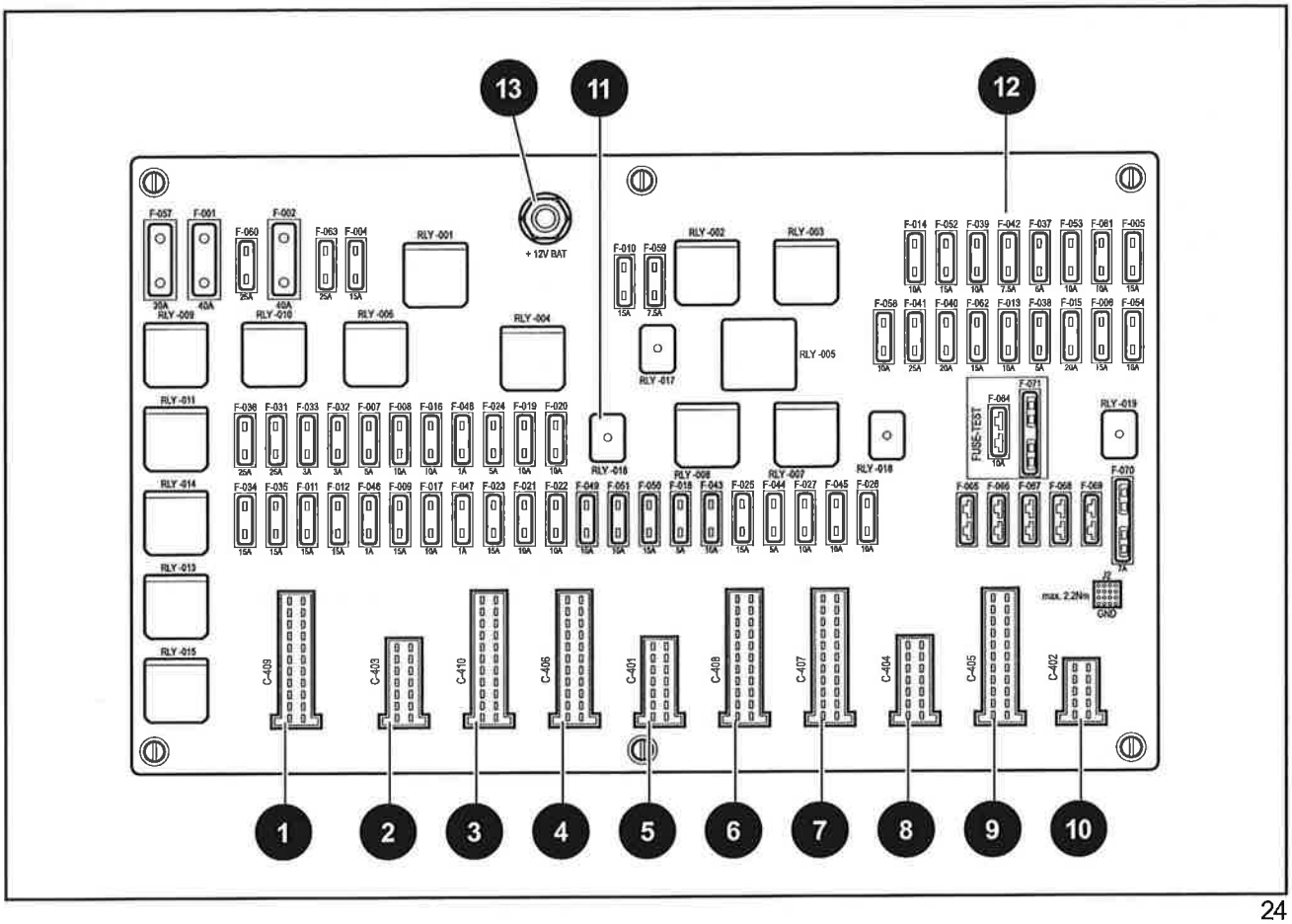

24

1. Cab Connector C-409
2. Front Connector C-403
3. Cab Connector C-410
4. Engine Connector C-406
5. GPS Connector C-401
6. Cab Connector C-408
7. Cab Connector C-407
8. Front Connector C-404
9. Engine Connector C-405
10. Auxiliary Connector C-402
11. Relays 001 to 019
12. Fuses F001 to F070
13. Battery Supply 12V

Fuses identification

Fuses location	Amperage	Fuses identification
F-001	40A	Work headlamps relay power supply
F-002	40A	Work headlamps relay power supply
F-003		-
F-004	15A	Standby
F-005	15A	Knock down Roller
F-006	15A	Relay coil power supply 12V/24V
F-007	5A	Brake lamp
F-008	10A	Pilot valve 1 / pilot 2 / Topper articulation / Trailer
F-009	15A	Topper slew LH / RH
F-010	15A	Road tail light (optional)
F-011	15A	Road front lights (optional)
F-012	15A	Road front lights (optional)

continued...

Fuses Identification (Continued)

Fuses location	Amperage	Fuses identification
F-013	10A	Cigarette lighter
F-014	10A	Outlet 12V
F-015	20A	Windshield washer
F-016	10A	Basecutter Up/Down / Topper Up/Down
F-017	10A	Cropdivider right/left (up/down)
F-018	5A	Reverse alarm / Horn / Start inhibitor
F-019	10A	Key-switched power supply to radio / CD and air conditioning module
F-020	10A	Key-switched power supply of the elevator yield monitor (optional)
F-021	10A	Key-switched power supply of the windscreen wiper motor
F-022	10A	Key-switched power supply of the GPS
F-023	15A	Operator seat engine power supply
F-024	5A	Key-switched power supply of the RH console switches
F-025	15A	Side trim knife slew right/left
F-026	10A	Extend/retract right/left side trim
F-027	10A	Right/left cropdivider tilt
F-028		-
F-029		-
F-030		-
F-031	25A	Rear headlamps
F-032	3A	Front and rear headlamps (optional)
F-033	3A	Front and rear headlamps (optional)
F-034	15A	Front headlamps (external)
F-035	15A	Front headlamps (intermediate)
F-036	25A	Basecutter and Topper headlamps (optional)
F-037	5A	Ignition key
F-038	5A	Power supply of module SCM 1
F-039	10A	Giroflex / cabin's roof lamp
F-040	20A	Radio / CD and radio transmission
F-041	25A	Working headlamps
F-042	7.5A	Display / diagnosis connector / console RH
F-043	10A	Basecutter / chopper rotation Harvest and reverse direction
F-044	5A	Standby
F-045	10A	Basecutter tilt
F-046	3A	Power supply for module SCM 1
F-047	3A	Key-switched power supply for module SCM 2
F-048	3A	Key-switched power supply for module SCM 3
F-049	10A	Billet length PWM valve / Primary extractor / Primary extractor PWM
F-050	15A	Elevator up/down / Bin Flap / Secondary extractor / Block pilot / Elevator conveyor
F-051	15A	Elevator slew left/right / Diff block / Parking brake
F-052	15A	Turn signal indicator lamp left/right
F-053	10A	Secondary extractor hood slew left/right
F-054	10A	Primary extractor hood slew left/right
F-055		-

continued...

Fuses Identification (Continued)

Fuses location	Amperage	Fuses identification
F-056		-
F-057	30A	Air blower 1st 2nd 3rd speed relay power supply
F-058	10A	Traction module relay power supply (maestro)
F-059	7.5A	Air conditioning compressor coil power supply
F-060	25A	Horn relay power supply
F-061	10A	Rotary bush actuator
F-062	15A	Standby
F-063	25A	Standby
F-064	5A	Fuses test
F-065	Empty	Spare
F-066	Empty	Spare
F-067	Empty	Spare
F-068	Empty	Spare
F-069	Empty	Spare
F-070	Empty	Spare
F-071	Empty	Fuse test
F-100	40A	Iveco Module

Relay identification

Relay	Description
RLY-001	Module SCM 1 Safety
RLY-002	Module SCM 2 Safety
RLY-003	Module SCM 3 Safety / Maestro Traction Module
RLY-004	Master Relay
RLY-005	Timer Display
RLY-006	Module SCM 1 Power Supply
RLY-007	Module SCM 2 Power Supply
RLY-008	Module SCM 3 Power Supply
RLY-009	Work Headlamps Activation
RLY-010	Work Headlamps Activation
RLY-011	Horn
RLY-012	-
RLY-013	Blower 2nd Speed
RLY-014	Blower 3rd Speed
RLY-015	Blower 1st Speed
RLY-016	Rear lights (optional)
RLY-017	Air Conditioning Compressor
RLY-018	Maestro Traction Module Activation
RLY-019	Start Up Activation

Switches

The switches are a crucial part of an electrical circuit, providing a method to control the circuit itself. A switch can control several electrical circuits at the same time. It is reached through several separated connections and/or switches with multiple connectors (several positions of the switch).

There are several types of switches, and they can incorporate a warning light.

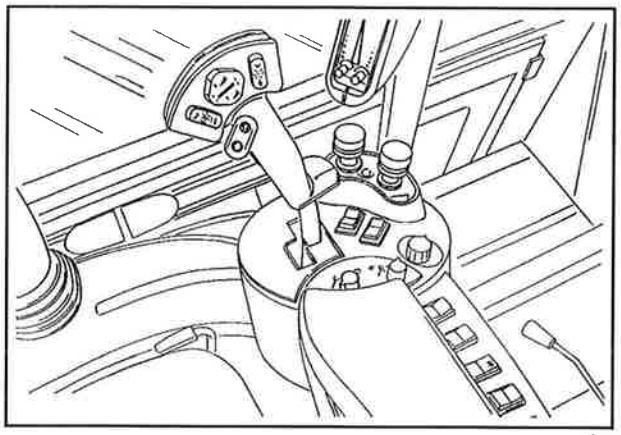

25

The switches can be as simple as those ones used to turn on the lights of an implement, or as complexes as those ones used to operate starting and illumination systems. The checking of the switches operation is usually a question of testing the input power supply in the switch and the output power supply in the appropriate contacts when the switch is activated.

One of the most common types of switches is the pressure switch, a switch that is open or closed by the pressure of a fluid. An example of this type of switch is the load pressure switch, a simple ON/OFF device that opens (or closes) when the oil pressure increases or decreases in relation to a pre-define value.

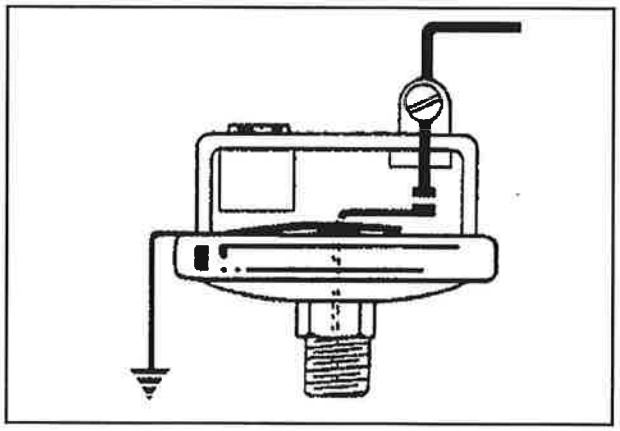

26

Resistance devices

Several electrical components shift or make use of the electricity through its resistance to the current flow. The resistors are components that are usually used to adjust the voltage and current supply to other electrical components.

In some cases, the purpose of the resistance in an electrical circuit is to provide light our heat. The lamps and the cigarette lighters are some examples. The lamps convert the electricity into light and the cigarette lighters convert it into heat. Both the lamps and the cigarette lighters use the same physical principle, or the Ohm Law.

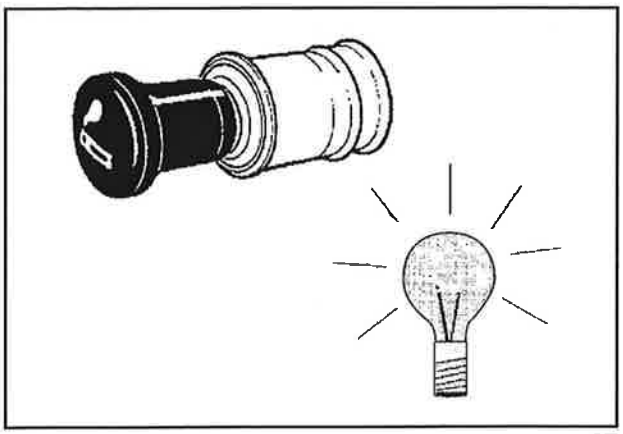

27

Fluid level transmitter

It operates the resistance variance through the oscillation movement. An example is the fuel level transmitter.

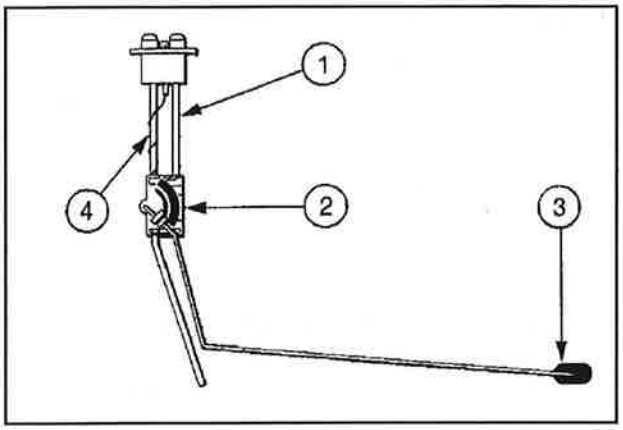

28

Potentiometers

The potentiometers are variable resistors that depend on mechanical movements, for example, movement of lateral oscillation, to vary the component resistance and, therefore, change the output voltage.

In order to check the potentiometer correct operation, the resistance must be measured in the minimum and maximum positions and a slight and continuous change of resistance must be observed between both. As the resistance varies with temperature, the test specifications are usually provided at 20° C.

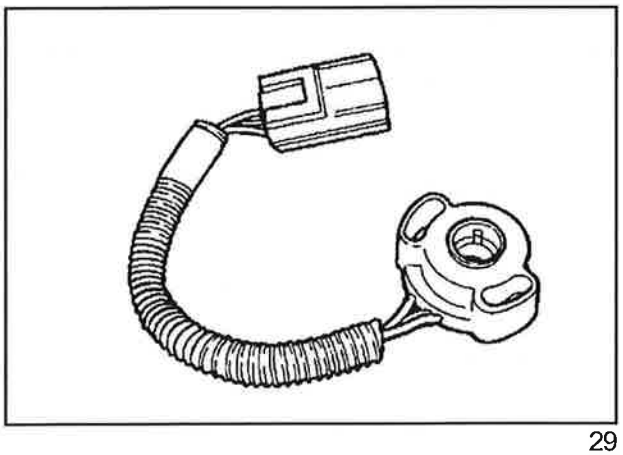

29

Electro-magnetic devices

Generally, they use an electro-magnetic field generated by the current flowing in order to move metal parts inside the components.

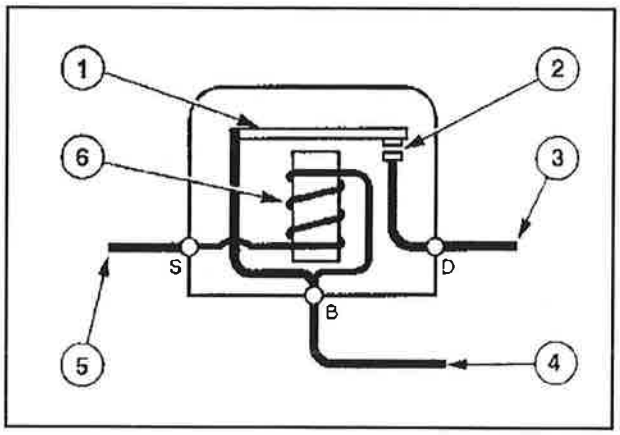

30

Relays

The relay is an electro-magnetic switch that uses a small quantity of current to turn ON and OFF a higher quantity.

When the operator closes a switch, the current flows through the circuit of the relay control. In this circuit, there are wire coilswire coils around an iron core that is fixed in place.

The current changes the core into an electro-magnet. The core, then, attracts an arm that has a contact point. When the arm point makes contact with the stationary point, the current flows through the supplying circuit.

The relays are basically switches operated by electricity. They are used to turn ON/OFF a circuit in a similar way as a manual switch.

There are two circuits connected to a relay:

- A work circuit, which is turned ON/OFF by the relay and supplies power to the equipment to be operated, for example, lamps, solenoids, etc.
- A control circuit, turned ON/OFF by manual switches, used to operate the relay.

The part of the relay that is connected to the control circuit consists of a coil of an electro-magnet. When the control circuit is turned OFF, the contacts are kept separated by a return spring. When the control circuit is turned ON, current flows through the core and a magnetic power is produced. This power, which is higher than the spring pressure, joins the relay contacts, causing the work circuit operation.

A switch-relay system has two main advantages over the simple switches:

- The current that flows through the switch is not the same as all the current required to operate the equipment, but usually a smaller current: it allows the use of smaller and cheaper switches.
- The distance from the source to the equipment can be as shorter as possible to reduce the voltage drop to the minimum.

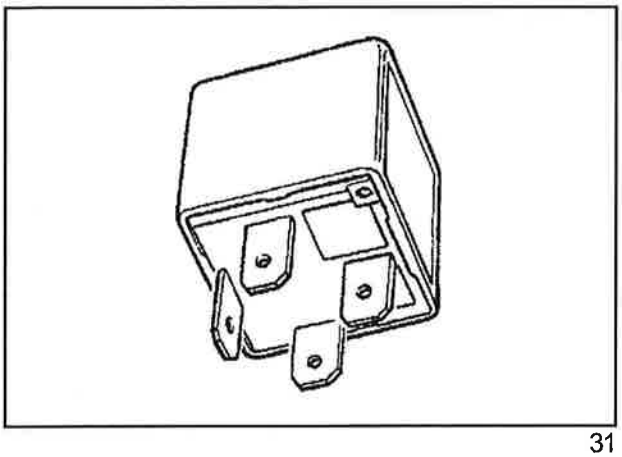

31

There are different styles of relay in the sugar harvester. The micro-relay (1) is the most common relay in use, the mini-relay (2) and the relay for time delay (3).

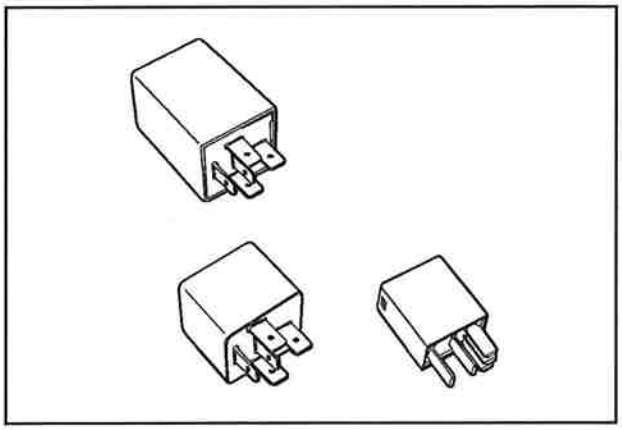

32

In the relay cover, there are marks for the terminals:

- 3 or 30: input terminal directly from the battery positive, usually loaded.
- 2 or 85: output terminal with wire coilswire coils, usually to the ground.
- 1 or 86: input terminals with wire coilswire coils.
- 4 or 87: output terminal for contact usually closed.
- 5 or 87a: output terminal for contact usually open.

Solenoids

The solenoids work in a very similar way as the relays, except for the iron core that is not fixed in place. As the result, the wires rolled in the control circuit make the core to move.

In the starter system, for example, the movement of this core is used to send large quantities of current to the starter motor.

Basically, a solenoid is a wire rolled around an iron core. In the core center there is a plunger that freely moves by the core. When an electrical current passes through the rolled wire, an electro-magnetic power is produced, which makes the central spool to move behind the core. If the current is turned OFF, the electro-magnetic power stops and the plunger returns with the help of a spring.

The solenoid central spool can have different usages: the most common is to make the movement of a hydraulic spool or a mechanical lever.

The MOST COMMON ERRORS that can occur are:

- Short-circuit in the wire coilswire coils: if a section of wire coilswire coils allow the current to pass directly from the positive (+) terminal to the negative (-) terminal without passing through the wire coils, it will cause the fuse of the relevant circuit to blow.
- Broken wire coilswire coils: cause an open circuit, it will not allow the current passage through the wire coilswire coils, then the solenoid will not work.
- Central spool stuck (and/or connected components): the solenoid will only move the central spool if all the components have free movement.

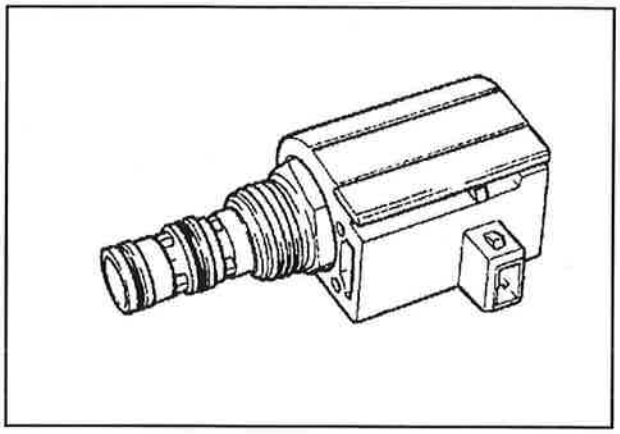

33

Solenoid valves PWM

Whenever it is necessary to provide a proportional control to the solenoid valves, it is much better if you use an operation principle named pulse width modulation (PWM). The PWN is a variable DC voltage signal that is used to control the solenoid valves. The voltage signal has an ON/OFF pulse of ten times per second (at a constant frequency of 500Hz) at a constant supply voltage of 12V.

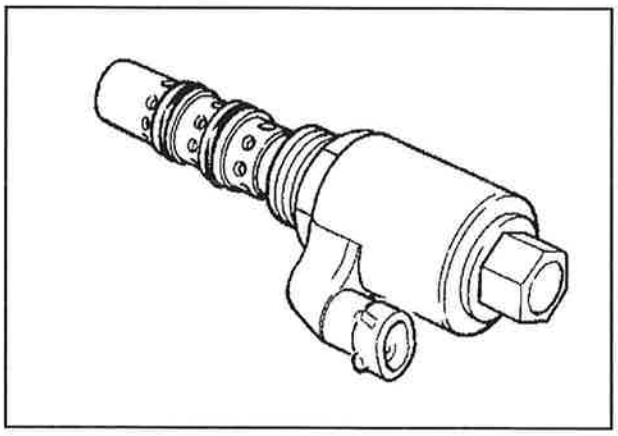

34

Electronic modules (SCM)

The electronic module (1) is a "black box" that provides control to many of the harvester functions.

Inside the module there is a processor, which is the "thinking part", and inside some of them there are one or more memories, which can allow the module to storage calibration values, the vehicle's setup, and the error codes.

A processor has a series of pins that are electrical contacts. There are three main types of pins: for the signals input, the signal output, and for the processor power supply.

The processor, the memories and the connections among them from the module hardware, its "physical" part.

Then, there is the need of a software to handle the communication between the processor and the memories, and to generate the several signals that enter and exit the processor. The software is designed to operate in a different way, and it is called functional code.

The electronic module is frequently responsible for most the problems in the modern vehicles, even though it is between the most protected parts of the vehicle. In fact, the module's pins are protected against current peaks (high pulses) and the signals are filtered by the hardware and by the software in the entrance and exit to provide the best handling of information.

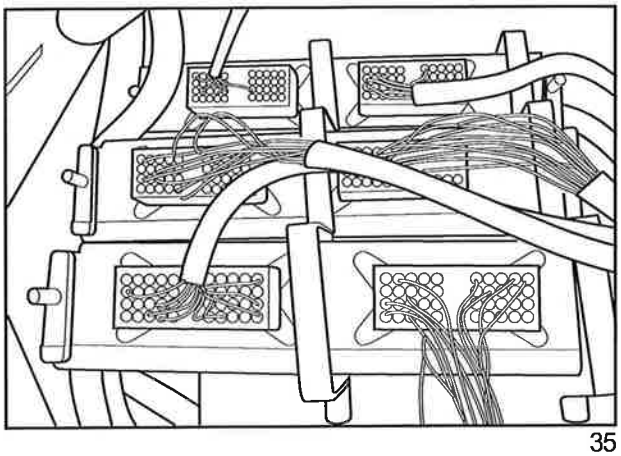

35

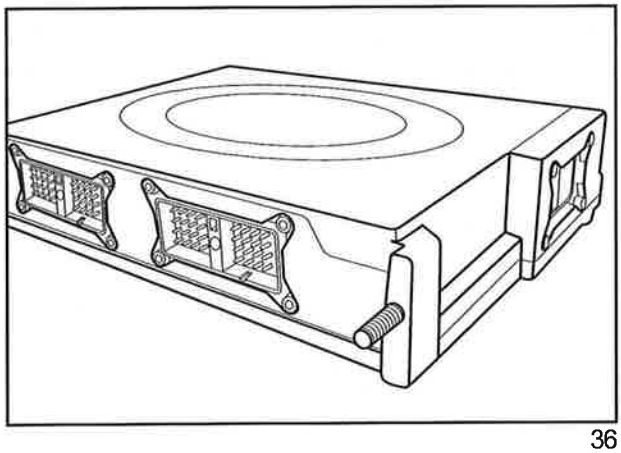

36

The SCM module (1) contains transistors that receive a constant input voltage, which is turned ON and OFF to reach the variable entrance range.

Thus, the control module can limit the induced movement, so that the solenoid's hydraulic exit flow rate is proportional to the average DC voltage. The smaller voltage also allows the solenoids to operate with a smaller residual magnetism, thus the entire circuit can operate uniformly.

The level of the variable DC voltage signal is determined by the variation of the duration of the pulse ON in relation to the pulse OFF. The ratio between the time ON and the cycle time is called work cycle, and it is show as a percentage of a complete cycle.

The diagrams (1) to (3) show the normal operation range of the PWM valve, and the diagram (4) shows only the initial programming of 12V and the fulfillment time. The diagrams in column "A" show the voltage signal sent to the valve, while the column "B" shows the relevant spring pressure, and the column "C" shows the reading in a voltmeter connected to the solenoid valve.

The diagram (1) shows the position OFF: there is no signal routing to the valve, which means that there is no pressure in the valve spring and it results in a voltage reading as zero. The increase in the work cycle causes some pressure in the circuit (Diagram (2)), which results in an increase in the voltmeter reading. The diagram (3) shows the maximum signal that is used during the valve's normal activity: its work cycle is of approximately 0.5, which results in a pressure of the spring during half of its operation and an indication of average DC current of 6 volts.

The electrical circuit for the solenoids can be checked through the use of an analogical or digital voltmeter, which will indicate the reading of the average voltage.

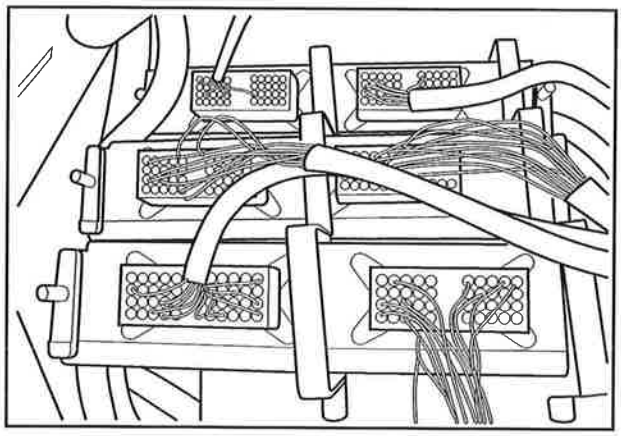

37

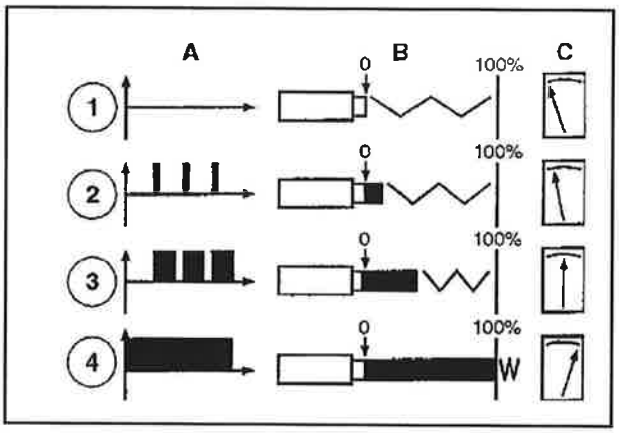

38

Sensors

A sensor is a primary component in a measurement chain that converts the input variable (temperature, capacitance, reluctance) into an appropriate signal to be measured. The relation between the input signal and the measured signal is a characteristic of the sensor.

In the measurement chain above mentioned, the signal is filtered and treated so that is can be adapted to its use. It consists of three elements: the sensor itself, the converter, which converts the sensor output signal (in most cases into an electrical signal), and the conditioner, which changes the output signal from the converter in a more appropriate way.

Usually, the term sensor indicates all the measurement chain.

Temperature sensors

Usually based in a simple circuit with a thermistor. The thermistor is a resistor that changes its resistance according to the temperature.

There are two groups of thermistors: NTC (Negative Temperature Coefficient) and the PTC (Positive Temperature Coefficient). In the first case, the higher the temperature is, the lower the resistance will be; and for the PTC, the higher the temperature is, the higher the resistance will be. The NTCs are usually used as sensors to indicate temperature of fluids, such as the engine coolant.

An example of these types of emitter is the temperature emitter for the cooler. The changes in its resistance (which varies with the temperature) are sent to the display, which operates the bar graphic and the warning indicators accordingly.

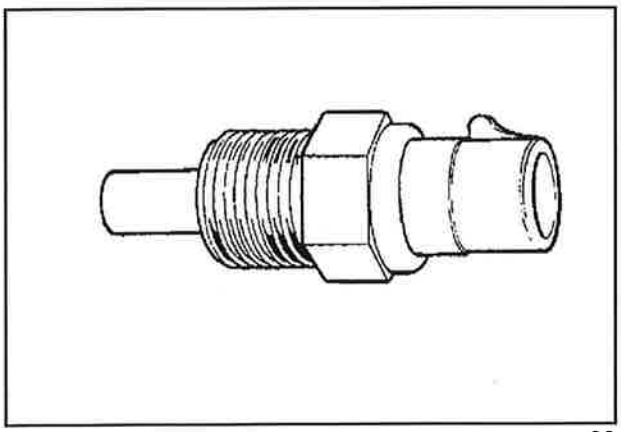

39

Pressure transmitter

A pressure emitter receives a supplying signal and varies according to the pressure (from the oil). An example is the oil pressure emitter, which receives a signal of 5 volts and changes according to the oil pressure. The appropriate module follows these changes and changes the readings and warnings accordingly.

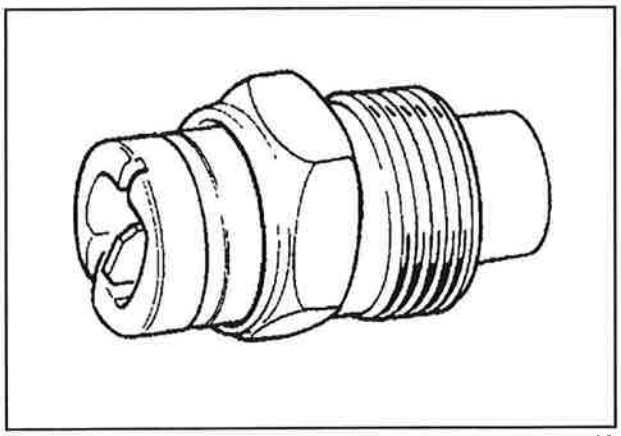

40

SECTION 04 - ELECTRIC SYSTEMS

Chapter 4 - Data Bus CAN Network Overview

CONTENTS

Section	Description	Page
04	CAN Network	3
	Troubleshooting	4
	Interaction with Other Systems	8

CAN NETWORK

The CAN network is a multiplex system that follows the guidelines established in the SAE J1939. In a simplified way, a multiplex system is a link between two or more digital devices through a network. In the past, when a tachometer, an engine controller and a transmission required information from the RPM sensor, these three devices needed to be linked to the RPM sensor by wire. With the CAN Data Bus only one wire is necessary. The information can, then, be accessed through a network by other systems that need it. The systems in the network that do not need RPM data ignore the network messages. In the high technology equipments nowadays, the wiring complexity can be drastically reduced through the use of the CAN Data Bus network.

The network is constituted of a pair of wires, identified as CAN HI (yellow) and CAN LO (green). These two wires are used to generate a "bus" network, in which the wires work in parallel from an end of the vehicle to the other, and each module is connected to two wires as a "node". These two wires are connected together in each end of the network using a resistor of 120 ohm, known as "termination" resistor. As there is a resistor of 120 ohm in each end of the network, the resistance between the CAN HI and CAN LO wires must always be of 60 ohms.

In the Cane harvester, one of these termination resistors is located in the cabin wiring harness, next to the Mod-007 (Display) connector, while the termination resistor in the other end of the network is in the ECU (Mod-006).

Each connected control module acts as a separated "node" in the network. As one of the control modules receives data from the sensors, switches, potentiometers, it transmits this information through the network to the other modules, which can collect them and use them as necessary. Each module knows which information is necessary through the software programmed in it.

When the network is initially feed (the operator turns the starter key), each module in the network sends a message announcing its existence and checks if there are other messages sent by other modules in the network. After these initial messages, each control module sends data messages according to the needs. If the module has not sent any data message within 5 seconds, it will send another transmission message informing its existence. It occurs in order to monitor the status of each module in the network. If a certain module has not transmitted any message during more than 5 seconds, then the other modules in the network will generate a warning message indicating that it is "off-line".

NOTE: *If the control module has never been feed and do not transmit an initial message, the other modules do not know its existence and no other warning will be generated informing that it is "off-line".*

TROUBLESHOOTING

There are two general conditions that can make an individual module to remain in the "off-line" status; loss of power of the module or errors related to the CAN.

Each module requires power supply and mass supply to provide main operational power to the module; if one of these is interrupted, the module will remain with no power supply and will not be activated in the network;

NOTE: *If the control module has never been feed and do not transmit an initial message, the other modules do not know its existence and no other warning will be generated informing that it is "off-line".*

There are several possible errors related to CAN that can make the module to remain off-line. Some external problems include poor or open connections in the CAN HI and CAN LO network wiring as a result of the damaged wiring. Some internal problems include a failure in the CAN controller (the device that really makes the "communication" through the network) or the module can be "busy" due to an excessive number of error messages.

Module Power Supply and Ground Tests

1. Before proceeding with the test to look for errors in the CAN network signal wiring, the power supply and the ground of the modules in the network must be tested. Check the ground and power supply graphic below to check if the ground and power supply sources of each module. Use a multimeter to test the ground continuity in the ground and power supply of 12V line in the supplying wiring. If the module power supply and the grounding supply are working properly, but there still have an error, proceed with the step 2.

Module	Power	Ground	Comments
Module SCM 1	• Connector C-101 pin 1 (RD) B+ • Connector C-101 pin 4 (OR) ignition B+	• Connector C-101 pin 8 • Connector C-102 pin 12, 31, 32 • Connector C-103 pin 22	• See page 2 • Power supply B+ of fuse F-038 • Power supply B+ of ignition of fuse F-037 through ignition key
Module SCM 2	• Connector C-201 pin 1 (RD) B+ • Connector C-201 pin 4 (OR) ignition B+	• Connector C-201 pin 8 • Connector C-202 pin 12, 16, 18 • Connector C-203 pin 12	• See page 3 • Power supply B+ of fuse F-038 • Power supply B+ of ignition of fuse F-037 through ignition key
Module SCM 3	• Connector C-301 pin 1 (RD) B+ • Conenctor C-301 pin 4 (OR) ignition B+	• Connector C-301 pin 8 • Connector C-302 pin 12, 31, 32 • Connector C-303 pin 22	• See page 3 • Power supply B+ of fuse F-038 • Power supply B+ of ignition of fuse F-048 through ignition key
Traction Module Maestro II	• Connector C-018 pin 22 (RD) B+ • Connector C-018 pin 8 (OR) ignition B+	• Connector C-017 pin 16 • Connector C-017 pin 17	• See page 3 • Power supply B+ of fuse F-038 • Power supply B+ of ignition of fuse F-037 through ignition key
Joystick Module	• Connector C-105 pin 1 (OR) ignition B+	• Connector C-105 pin 3	• See page 4 • Power supply B+ of ignition of fuse F-037
Console Module Right Hand	• Connector C-025 pin 2 (RD) B+ • Connector C-025 pin 3 (OR) ignition B+	• Connector C-025 pin 12	• See page 9 • Power supply B+ of fuse F-042 • Power supply B+ of ignition of fuse F-024
Display Module	• Connector C-021 pin 13 (RD) B+ • Connector C-021 pin 15 (OR) ignition B+	• Connector C-021 pin 14	• See page 9 • Power supply B+ of fuse F-042 • Power supply B+ of ignition of fuse F-024

CAN Network Signal Wiring Test

To confirm if the CAN HI and CAN LO are in short-circuit or open, and to check the termination resistors in the modules, perform the checking below in the diagnosis connector (DAM) next to the ignition key, see page 8 to obtain the electrical scheme of the CAN system.

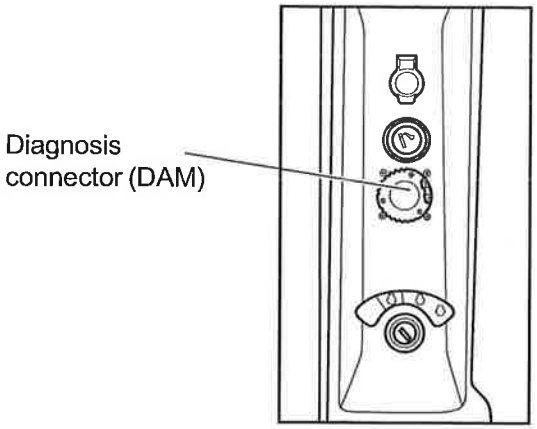

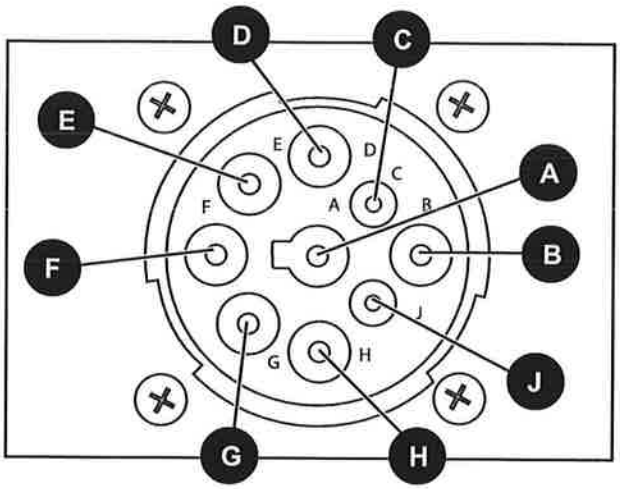

Pins positions

A - Ground (BL)

B - Positive (RD)

C - CAN H (YE)

D - CAN L (GN)

E - Communication

F - Serial communication with RHM (PK)

G - Serial communication with RHM (BL)

H - CAN H (YE)

J - CAN L (GN)

2. Use a multimeter to check the resistance between the pin (C and D) and the pin (H and J) of the diagnostics connector. It will quickly check if there is a short-circuit or an open circuit in the system.
   A. A reading of less than 5 ohms confirms that the CAN HI (yellow wire) is in short-circuiting with the CAN LO (green wire). Check the continuity in the wiring harness between the modules in page 8
   B. A reading of 120 ohms confirms the existence of an open circuit in CAN HI or CAN LO. Check the continuity in the wiring harness between the modules in page 8
   C. A reading of 60 ohms confirms that there are no open circuits in the network wiring; therefore it is OK.

NOTE: *There are two termination resistors of 120 ohms, one located next to the C-021 connector of the display and another next to the ECU module (MOD-006) Scania / Iveco.*

NOTE: *There are two CAN networks.*

3. Turn the ignition key ON. Use a multimeter to check the tension between the following pins of the diagnosis connector (DAM) and the ground.

Connector (DAM)	pin C and the ground
	pin D and the ground
	pin H and the ground
	pin J and the ground

A. A reading of approximately 2.2 to 2.7 volts confirms that the harness is OK.

B. A reading of above 2.7 volts confirms the presence of a short-circuit with the power supply. Repair and replace the wiring harness according to the needs.

4. With the starter key turned OFF, check the resistance between the mass and the pins C, D, H, J must have a resistance of approximately 2.5 Mega ohms, it means 1,000,000 ohms (high resistance), being out of these values confirms the presence of a short-circuit with the ground. Repair and replace the wiring harness according to the needs.

Interaction with Other Systems

CAN Communication

NOTE: *The final users can only connect their own systems to the CAN network if they comply with the STD J1939. The compliance with the STD J1939 is essential for the system's safety and reliability.*

NOTE: *It is also not possible to measure or check the CAN messages with a multimeter. Use ECOM and the blinking codes to locate the cause of the possible malfunctioning.*

CAN is the abbreviation of Controller Area Network. The CAN communication is used to reduce the number of cables and, at the same time, to increase the reliability. The communication circuit consists of two cables: CAN H (High) and CAN L (Low).

Several different systems are connected to these two cables, making thus a network. The CAN communication is used, for example, between the EMS and the coordinator.

In simple terms, the CAN communication is similar to the radio. The data messages that run through a CAN cable can be compared to the radio waves that travel by the air.

When you are listening to the radio, the receiver is dialed so that one radio station is listened at a time. Only one station is listened to, even though there are many others stations broadcasting simultaneously.

A command unit makes more or less the same with the messages that run by a CAN cable. It listens to, for example the information from the EMS command unit about the cooler temperature, receives this value and uses the value in its calculations.

The command unit receives several CAN messages - that are sent by the communication circuit - in a special memory. This memory can be compared to some radio receivers that are all turned ON, but dialed in different radio stations to listen to several programs at the same time. Thus, the command unit continuously receives what is happening.

SECTION 04 - ELECTRIC SYSTEMS

Chapter 5 - Electrical schemes

CONTENTS

Section	Description	Page
04	Electrical schemes	3
	Operation of the Charge System Circuit	47
	Operation of the Starter System Circuit	49
	Operation of the Auto Tracker System Circuit	54
	Operation of the Electronic Tracker Electrical Circuit	58
	Operation of the Blower Control Circuit	59
	Operation of the Air Control Circuit - Air Conditioning / Heating	59
	Operation of the A/C Compressor Protection Circuit	60
	Operation of the Interior Rool Lamp Circuit	66
	Operation of the Wiper / Washer System Circuit	68
	Operation of the Cylinder Command Electrical Circuit	72
	Operation of the Cylinder Auxiliary Block Electrical Circuit	75
	Operation of the Basecutter Block Electrical Circuit	77
	Operation of the Side Trim Knife Block Electrical Circuit	78

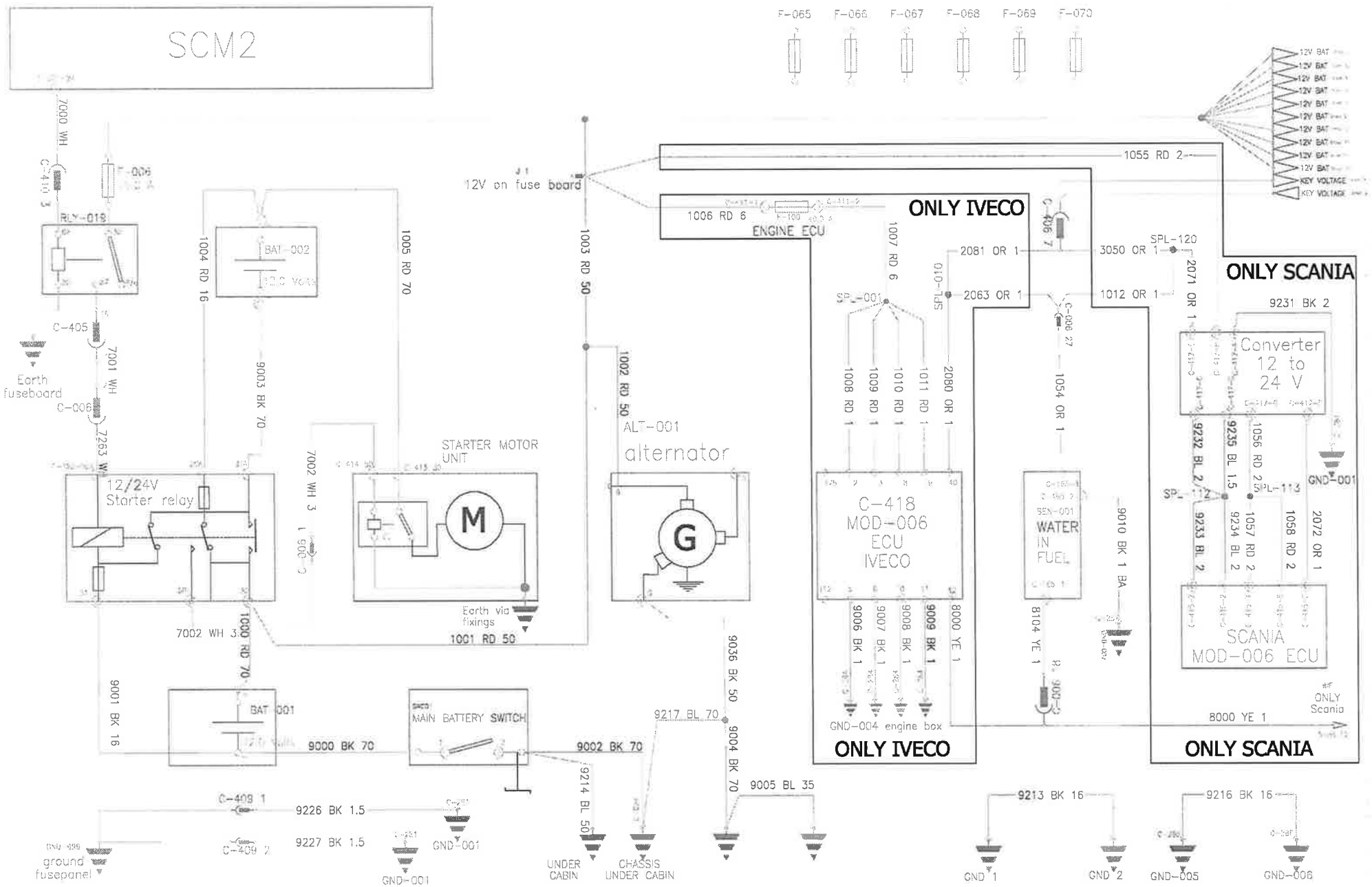
SCM2
F-065
F-066
F-067
F-068
F-069
F-070
12V BAT
KEY VOLTAGE
7000 WH
C-410 3
F-006
RLY-019
C-405
Earth fuseboard
7001 WH
C-006
7263 WH
12/24V Starter relay
1004 RD 16
BAT-002
9003 BK 70
1005 RD 70
7002 WH 3
C-006
STARTER MOTOR UNIT
M
Earth via fixings
1001 RD 50
7002 WH 3
1000 RD 70
9001 BK 16
BAT-001
9000 BK 70
MAIN BATTERY SWITCH
9002 BK 70
J1
12V on fuse board
1003 RD 50
1002 RD 50
ALT-001
alternator
G
9036 BK 50
9217 BL 70
9004 BK 70
9005 BL 35
9214 BL 50
UNDER CABIN
CHASSIS UNDER CABIN
C-409 1
9226 BK 1.5
C-409 2
9227 BK 1.5
GND-001
ground fusepanel
1006 RD 6
ENGINE ECU
ONLY IVECO
1007 RD 6
SPL-001
SPL-010
2081 OR 1
2063 OR 1
1008 RD 1
1009 RD 1
1010 RD 1
1011 RD 1
2080 OR 1
C-418
MOD-006
ECU
IVECO
9006 BK 1
9007 BK 1
9008 BK 1
9009 BK 1
8000 YE 1
GND-004 engine box
ONLY IVECO
1055 RD 2
R06 7
3050 OR 1
SPL-120
1012 OR 1
C-006 27
1054 OR 1
SEN-001
WATER IN FUEL
8104 YE 1
R 900-2
9010 BK 1 BA
ONLY SCANIA
2071 OR 1
9231 BK 2
Converter 12 to 24 V
9232 BL 2
9235 BL 1.5
1056 RD 2
GND-001
SPL-113
9233 BL 2
9234 BL 2
1057 RD 2
1058 RD 2
2072 OR 1
SCANIA
MOD-006 ECU
ONLY Scania
8000 YE 1
ONLY SCANIA
9213 BK 16
9216 BK 16
GND 1
GND 2
GND-005
GND-006

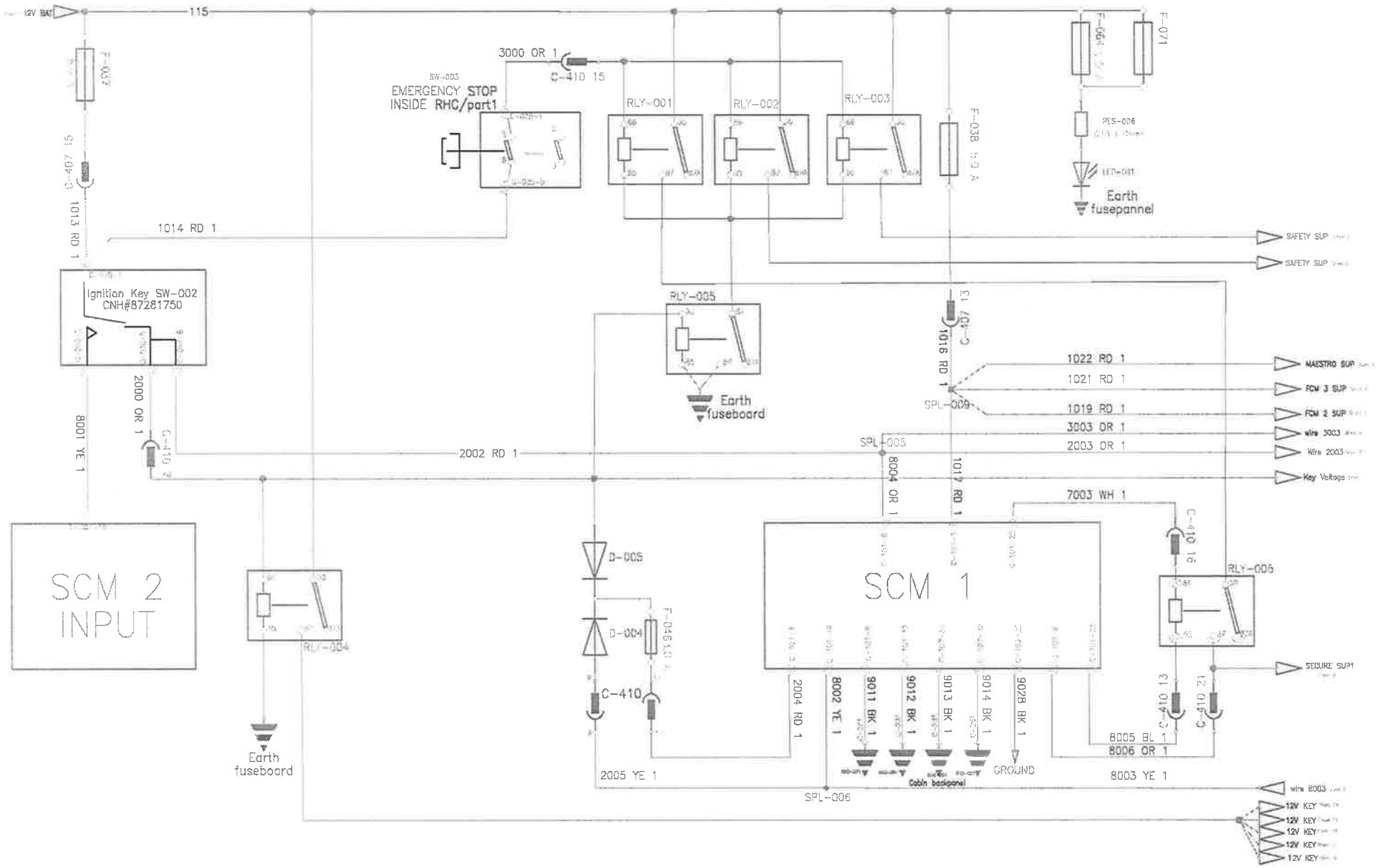
12V BAT
115
F-037
C-407 15
1013 RD 1
1014 RD 1
Ignition Key SW-002
CNH#87281750
2000 OR 1
8001 YE 1
C-410
2002 RD 1
SCM 2
INPUT
RLY-004
Earth
fuseboard
3000 OR 1
C-410 15
SW-003
EMERGENCY STOP
INSIDE RHC/part1
RLY-001
RLY-002
RLY-003
F-038
RLY-005
Earth
fuseboard
D-005
D-004
F-046
C-410
2005 YE 1
SPL-006
SPL-005
8004 OR 1
1017 RD 1
1016 RD 1
C-407 13
SPL-009
SCM 1
2004 RD 1
8002 YE 1
9011 BK 1
9012 BK 1
9013 BK 1
9014 BK 1
9028 BK 1
GROUND
Cabin backpanel
7003 WH 1
C-410 16
RLY-005
8005 BL 1
8006 OR 1
8003 YE 1
C-410 21
C-410 12
F-071
RES-006
LED-001
Earth
fusepannel
SAFETY SUP
SAFETY SUP
1022 RD 1
1021 RD 1
1019 RD 1
3003 OR 1
2003 OR 1
MAESTRO SUP
FCM 3 SUP
FCM 2 SUP
wire 3003
Wire 2003
Key Voltage
SECURE SUP1
wire 8003
12V KEY
12V KEY
12V KEY
12V KEY
12V KEY

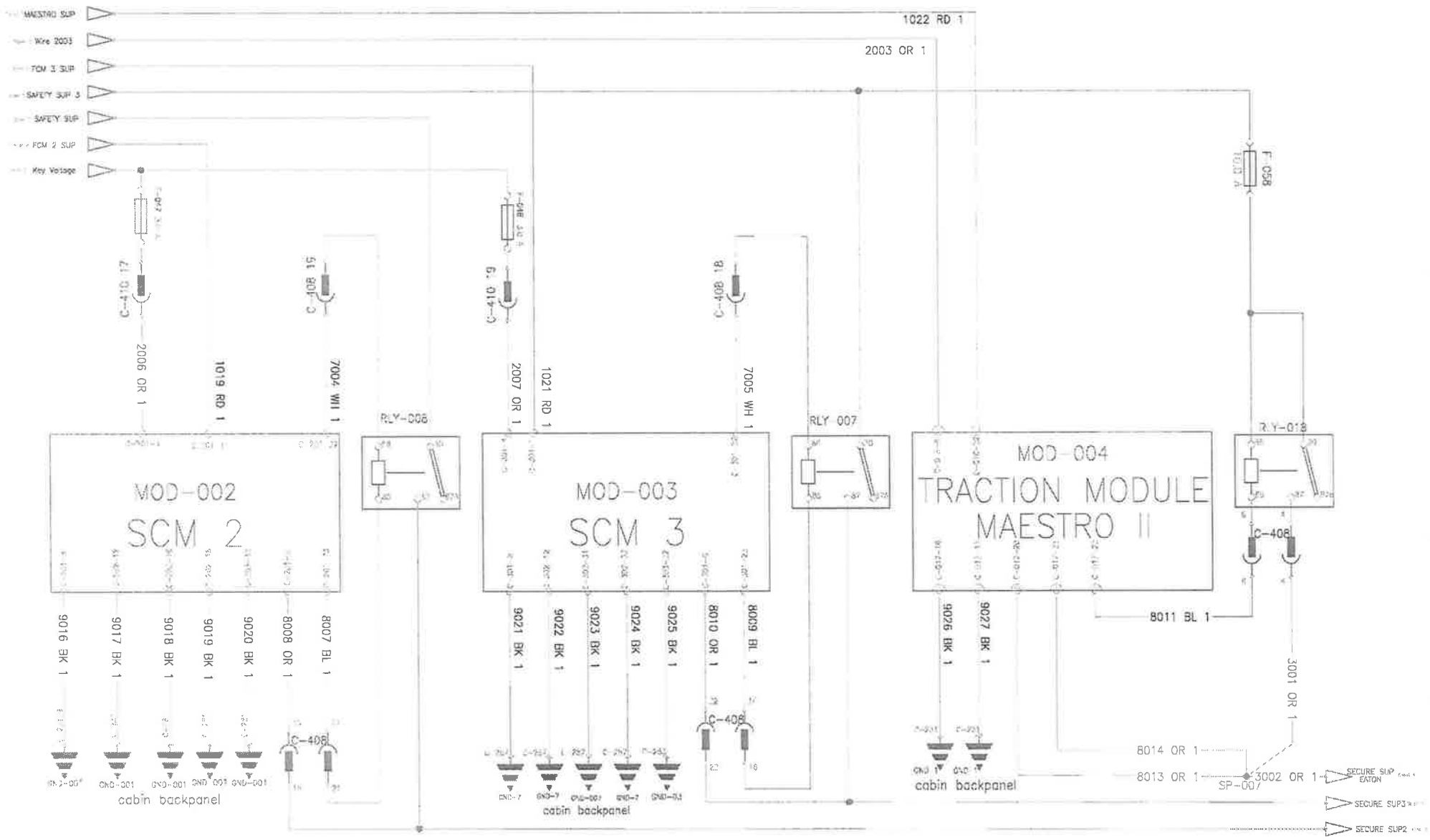
MAESTRO SUP
Wire 2003
FCM 3 SUP
SAFETY SUP 3
SAFETY SUP
FCM 2 SUP
Key Voltage
1022 RD 1
2003 OR 1
F-058
C-410 17
2006 OR 1
1019 RD 1
C-408 15
7004 WH 1
RLY-006
C-410 9
2007 OR 1
1021 RD 1
C-408 18
7005 WH 1
RLY 007
RLY-013
MOD-002
SCM 2
MOD-003
SCM 3
MOD-004
TRACTION MODULE
MAESTRO II
C-408
9016 BK 1
9017 BK 1
9018 BK 1
9019 BK 1
9020 BK 1
8008 OR 1
8007 BL 1
9021 BK 1
9022 BK 1
9023 BK 1
9024 BK 1
9025 BK 1
8010 OR 1
8009 BL 1
9026 BK 1
9027 BK 1
8011 BL 1
3001 OR 1
8014 OR 1
8013 OR 1
3002 OR 1
SP-007
SECURE SUP EATON
SECURE SUP3
SECURE SUP2
cabin backpanel
cabin backpanel
cabin backpanel

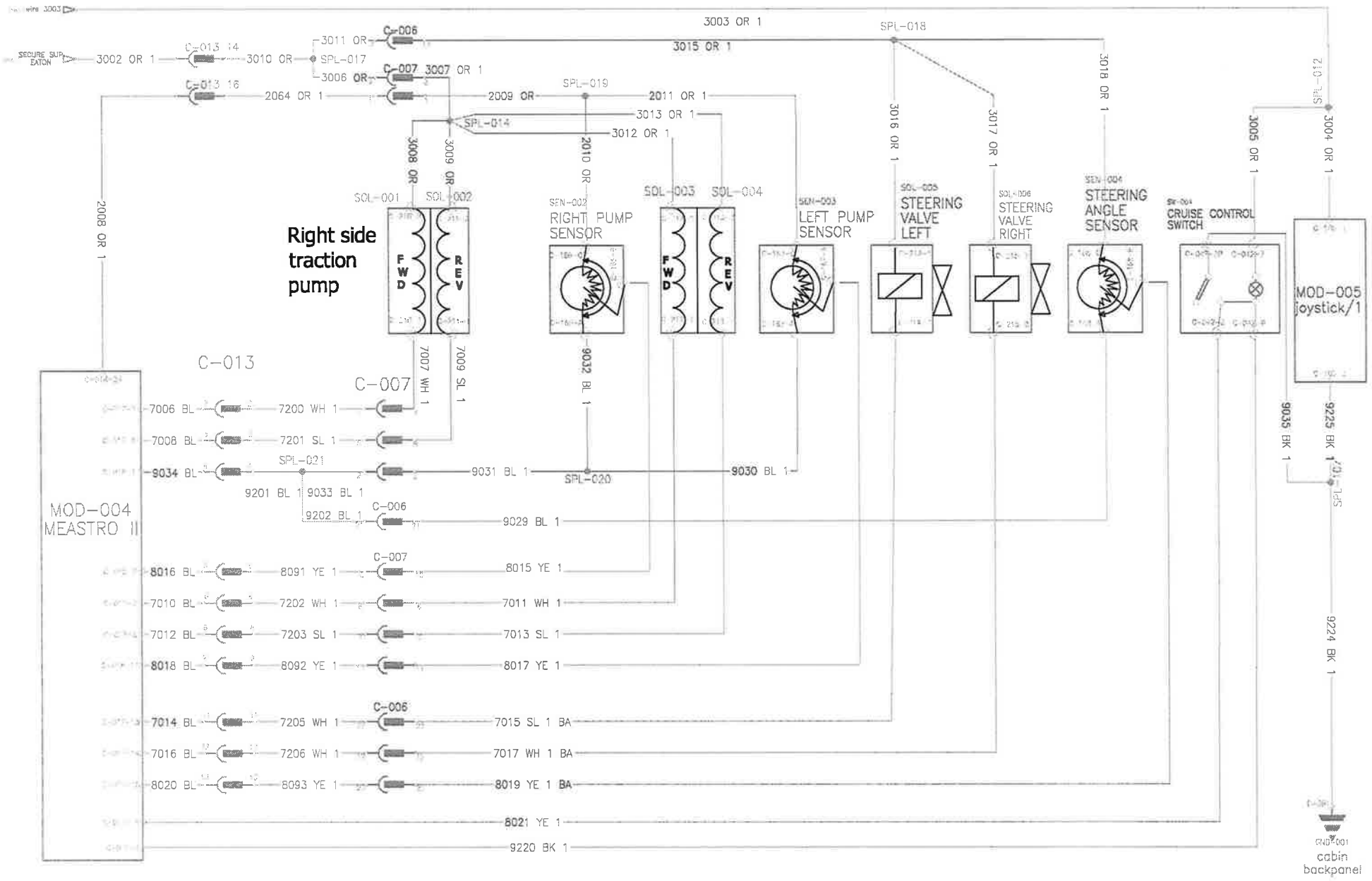
Right side traction pump
SECURE SUP. EATON
3002 OR 1
C-013 14
3010 OR
C-013 16
2064 OR 1
3011 OR
SPL-017
3006 OR
C-006
C-007
3007 OR 1
3003 OR 1
3015 OR 1
SPL-018
SPL-019
2009 OR
2011 OR 1
3013 OR 1
3012 OR 1
SPL-014
3008 OR
3009 OR
2010 OR
3016 OR 1
3017 OR 1
3018 OR 1
3005 OR 1
3004 OR 1
SPL-012
2008 OR 1
SOL-001
SOL-002
FWD
REV
SEN-002
RIGHT PUMP SENSOR
SOL-003
SOL-004
SEN-003
LEFT PUMP SENSOR
SOL-005
STEERING VALVE LEFT
SOL-006
STEERING VALVE RIGHT
SEN-004
STEERING ANGLE SENSOR
SW-004
CRUISE CONTROL SWITCH
MOD-005 joystick/1
C-013
C-007
7007 WH 1
7009 SL 1
9032 BL 1
9035 BK 1
9225 BK 1
SPL-015
MOD-004 MEASTRO II
7006 BL
7200 WH 1
7008 BL
7201 SL 1
9034 BL
SPL-021
9031 BL 1
SPL-020
9030 BL 1
9201 BL 1
9033 BL 1
9202 BL 1
9029 BL 1
8016 BL
8091 YE 1
8015 YE 1
7010 BL
7202 WH 1
7011 WH 1
7012 BL
7203 SL 1
7013 SL 1
8018 BL
8092 YE 1
8017 YE 1
7014 BL
7205 WH 1
7015 SL 1 BA
7016 BL
7206 WH 1
7017 WH 1 BA
8020 BL
8093 YE 1
8019 YE 1 BA
8021 YE 1
9220 BK 1
9224 BK 1
GND-001
cabin backpanel

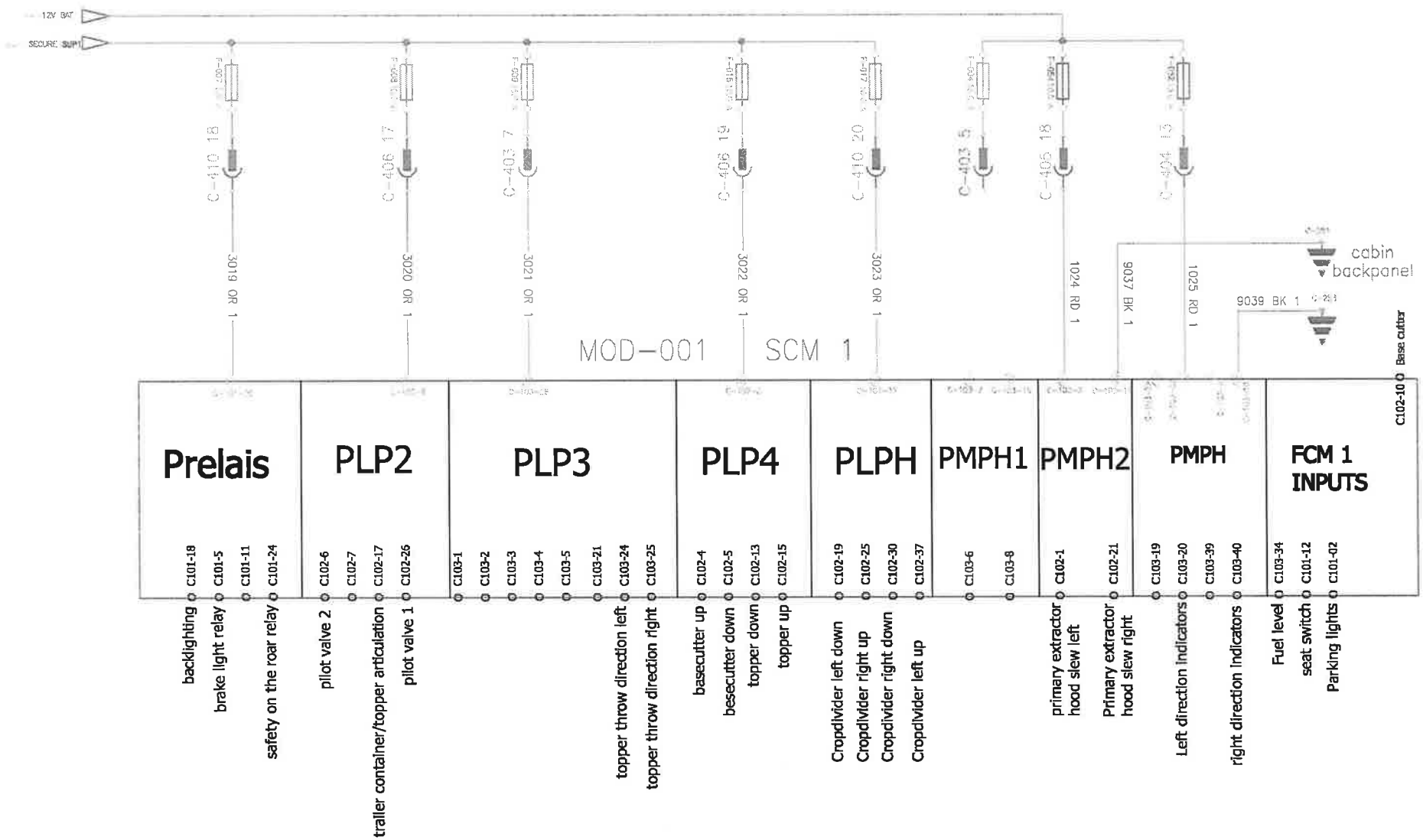
12V BAT
SECURE SUPT
C-410 18
C-406 17
C-403 7
C-406 19
C-410 20
C-403 5
C-405 18
C-404 13
3019 OR 1
3020 OR 1
3021 OR 1
3022 OR 1
3023 OR 1
1024 RD 1
9037 BK 1
1025 RD 1
9039 BK 1
cabin backpanel
MOD-001 SCM 1
Base cutter
C102-10
Prelais
PLP2
PLP3
PLP4
PLPH
PMPH1
PMPH2
PMPH
FCM 1 INPUTS
C101-18
C101-5
C101-11
C101-24
C102-6
C102-7
C102-17
C102-26
C103-1
C103-2
C103-3
C103-4
C103-5
C103-21
C103-24
C103-25
C102-4
C102-5
C102-13
C102-15
C102-19
C102-25
C102-30
C102-37
C103-6
C103-8
C102-1
C102-21
C103-19
C103-20
C103-39
C103-40
C103-34
C101-12
C101-02
backlighting
brake light relay
safety on the roar relay
pilot valve 2
trailer container/topper articulation
pilot valve 1
topper throw direction left
topper throw direction right
basecutter up
besecutter down
topper down
topper up
Cropdivider left down
Cropdivider right up
Cropdivider right down
Cropdivider left up
primary extractor hood slew left
Primary extractor hood slew right
Left direction indicators
right direction indicators
Fuel level
seat switch
Parking lights

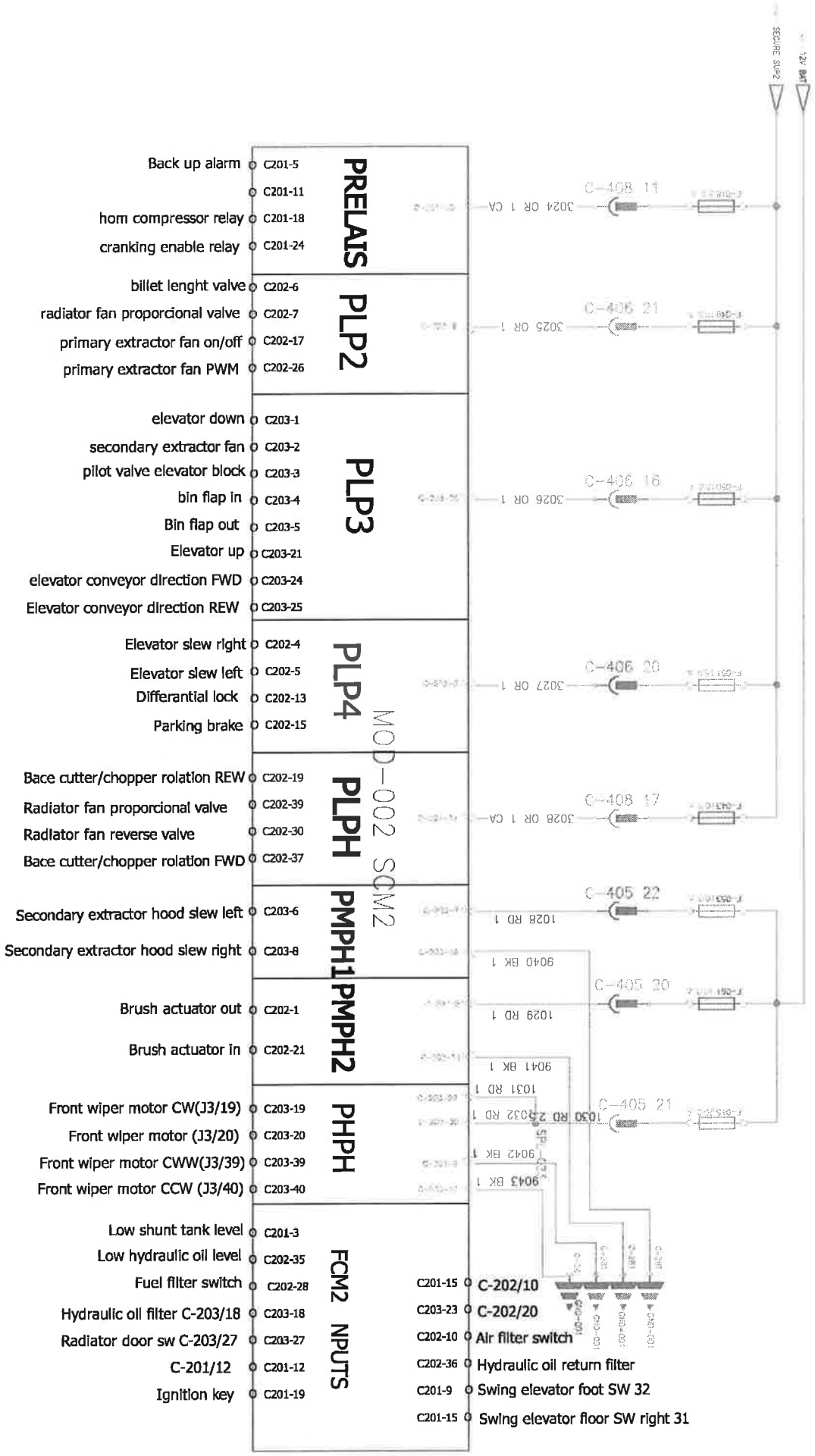
SECURE SUP2
12V BAT
PRELAIS
Back up alarm C201-5
C201-11
horn compressor relay C201-18
cranking enable relay C201-24
3024 OR 1 CA
C-408 11
PLP2
billet lenght valve C202-6
radiator fan proporcional valve C202-7
primary extractor fan on/off C202-17
primary extractor fan PWM C202-26
3025 OR 1
C-406 21
PLP3
elevator down C203-1
secondary extractor fan C203-2
pilot valve elevator block C203-3
bin flap in C203-4
Bin flap out C203-5
Elevator up C203-21
elevator conveyor direction FWD C203-24
Elevator conveyor direction REW C203-25
3026 OR 1
C-406 16
PLP4
Elevator slew right C202-4
Elevator slew left C202-5
Differantial lock C202-13
Parking brake C202-15
3027 OR 1
C-406 20
MOD-002 SCM2
PLPH
Bace cutter/chopper rolation REW C202-19
Radiator fan proporcional valve C202-39
Radiator fan reverse valve C202-30
Bace cutter/chopper rolation FWD C202-37
3028 OR 1 CA
C-408 17
PMPH1
Secondary extractor hood slew left C203-6
Secondary extractor hood slew right C203-8
1028 RD 1
9040 BK 1
C-405 22
PMPH2
Brush actuator out C202-1
Brush actuator in C202-21
1029 RD 1
9041 BK 1
C-405 20
PHPH
Front wiper motor CW(J3/19) C203-19
Front wiper motor (J3/20) C203-20
Front wiper motor CWW(J3/39) C203-39
Front wiper motor CCW (J3/40) C203-40
1031 RD 1
1030 RD 2
1032 RD 1
9042 BK 1
9043 BK 1
C-405 21
FCM2 NPUTS
Low shunt tank level C201-3
Low hydraulic oil level C202-35
Fuel filter switch C202-28
Hydraulic oil filter C-203/18 C203-18
Radiator door sw C-203/27 C203-27
C-201/12 C201-12
Ignition key C201-19
C201-15 C-202/10
C203-23 C-202/20
C202-10 Air filter switch
C202-36 Hydraulic oil return filter
C201-9 Swing elevator foot SW 32
C201-15 Swing elevator floor SW right 31

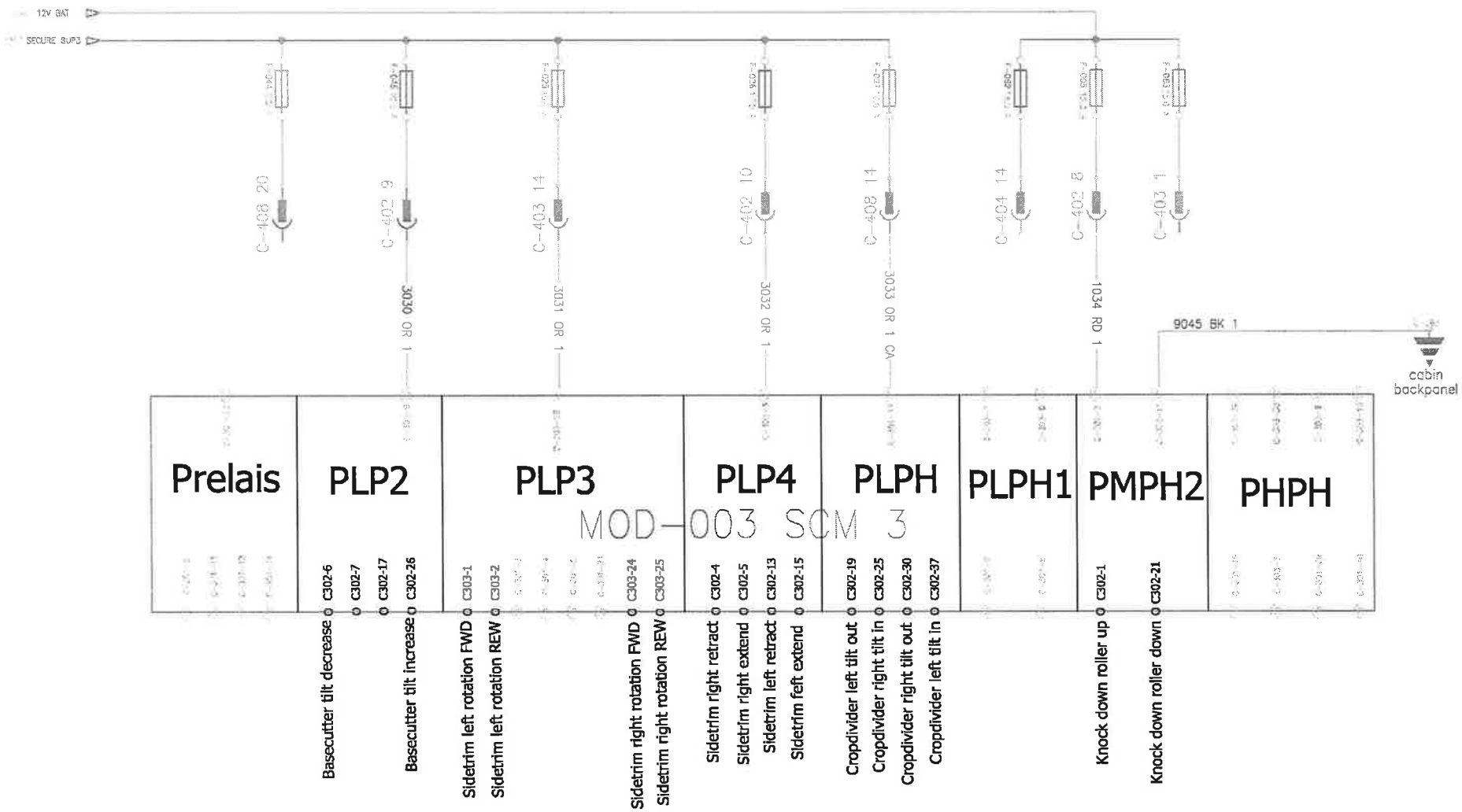
12V BAT
SECURE SUP3
C-408 20
C-402 9
C-403 14
C-402 10
C-408 14
C-404 14
C-402 8
C-403 1
3030 OR 1
3031 OR 1
3032 OR 1
3033 OR 1 CA
1034 RD 1
9045 BK 1
cabin backpanel
Prelais
PLP2
PLP3
PLP4
PLPH
PLPH1
PMPH2
PHPH
MOD-003 SCM 3
C302-6
C302-7
C302-17
C302-26
C303-1
C303-2
C303-24
C303-25
C302-4
C302-5
C302-13
C302-15
C302-19
C302-25
C302-30
C302-37
C302-1
C302-21
Basecutter tilt decrease
Basecutter tilt increase
Sidetrim left rotation FWD
Sidetrim left rotation REW
Sidetrim right rotation FWD
Sidetrim right rotation REW
Sidetrim right retract
Sidetrim right extend
Sidetrim left retract
Sidetrim left extend
Cropdivider left tilt out
Cropdivider right tilt in
Cropdivider right tilt out
Cropdivider left tilt in
Knock down roller up
Knock down roller down

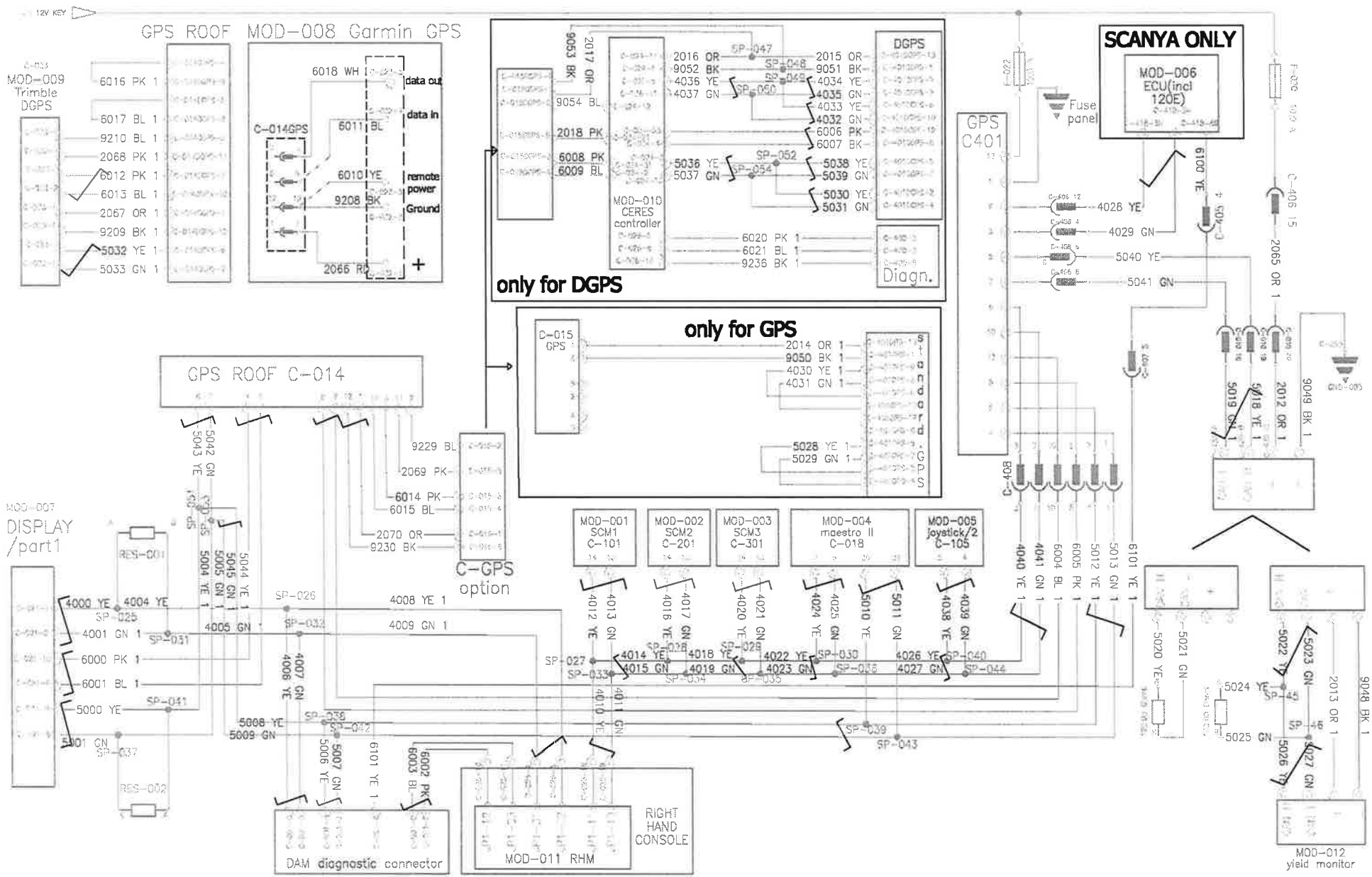
12V KEY
GPS ROOF
MOD-008 Garmin GPS
MOD-009 Trimble DGPS
6016 PK 1
6017 BL 1
9210 BL 1
2068 PK 1
6012 PK 1
6013 BL 1
2067 OR 1
9209 BK 1
5032 YE 1
5033 GN 1
6018 WH
data out
data in
remote power
Ground
C-014GPS
6011 BL
6010 YE
9208 BK
2066 RD
+
9053 BK
2017 OR
9054 BL
2018 PK
6008 PK
6009 BL
MOD-010 CERES controller
2016 OR
9052 BK
4036 YE
4037 GN
SP-047
SP-048
SP-049
SP-050
2015 OR
9051 BK
4034 YE
4035 GN
4033 YE
4032 GN
6006 PK
6007 BK
5036 YE
5037 GN
SP-052
SP-054
5038 YE
5039 GN
5030 YE
5031 GN
6020 PK 1
6021 BL 1
9236 BK 1
DGPS
Diagn.
only for DGPS
only for GPS
C-015 GPS
2014 OR 1
9050 BK 1
4030 YE 1
4031 GN 1
5028 YE 1
5029 GN 1
standard GPS
GPS C401
Fuse panel
SCANYA ONLY
MOD-006 ECU(incl 120E)
4028 YE
4029 GN
5040 YE
5041 GN
6100 YE
2065 OR 1
2012 OR 1
9049 BK 1
5019 GN
5018 YE 1
GPS ROOF C-014
5042 GN
5043 YE
9229 BL
2069 PK
6014 PK
6015 BL
2070 OR
9230 BK
C-GPS option
MOD-007 DISPLAY /part1
RES-001
RES-002
4000 YE
4004 YE
4001 GN 1
6000 PK 1
6001 BL 1
5000 YE
5001 GN
SP-025
SP-031
SP-041
SP-037
5004 YE 1
5005 GN 1
5045 GN 1
5044 YE 1
4005 GN
SP-026
SP-032
4008 YE 1
4009 GN 1
4007 GN
4006 YE
5008 YE
5009 GN
SP-036
SP-042
5006 YE
5007 GN
6101 YE 1
6002 PK
6003 BL
DAM diagnostic connector
MOD-001 SCM1 C-101
MOD-002 SCM2 C-201
MOD-003 SCM3 C-301
MOD-004 maestro II C-018
MOD-005 joystick/2 C-105
4012 YE
4013 GN
4016 YE
4017 GN
4020 YE
4021 GN
4024 YE
4025 GN
5010 YE
5011 GN
4038 YE
4039 GN
SP-027
SP-033
SP-028
SP-034
SP-029
SP-035
SP-030
SP-036
SP-040
SP-044
4014 YE
4015 GN
4018 YE
4019 GN
4022 YE
4023 GN
4026 YE
4027 GN
4010 YE
4011 GN
SP-039
SP-043
MOD-011 RHM
RIGHT HAND CONSOLE
4040 YE 1
4041 GN 1
6004 BL 1
6005 PK 1
5012 YE 1
5013 GN 1
6101 YE 1
5020 YE
5021 GN
5024 YE
5025 GN
5022 YE
5023 GN
SP-45
SP-46
5026 YE
5027 GN
2013 OR 1
9048 BK 1
MOD-012 yield monitor

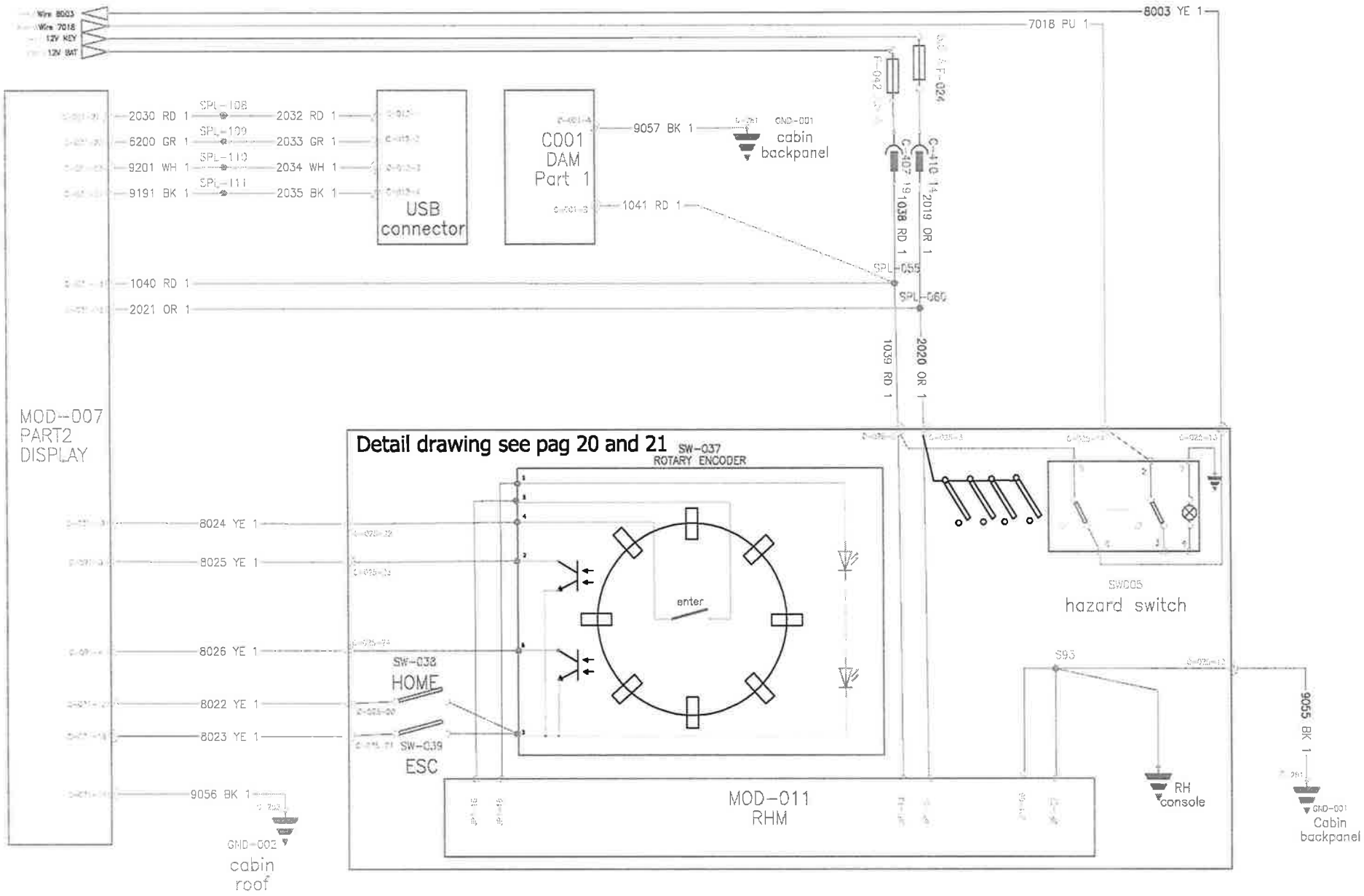
Wire 8003
Wire 7018
12V KEY
12V BAT
8003 YE 1
7018 PU 1
MOD--007
PART2
DISPLAY
2030 RD 1
6200 GR 1
9201 WH 1
9191 BK 1
SPL-108
SPL-109
SPL-110
SPL-111
2032 RD 1
2033 GR 1
2034 WH 1
2035 BK 1
USB
connector
C001
DAM
Part 1
9057 BK 1
1041 RD 1
GND-001
cabin
backpanel
1040 RD 1
2021 OR 1
SPL-055
SPL-060
1039 RD 1
2020 OR 1
2019 OR 1
Detail drawing see pag 20 and 21
SW-037
ROTARY ENCODER
enter
8024 YE 1
8025 YE 1
8026 YE 1
8022 YE 1
8023 YE 1
9056 BK 1
SW-038
HOME
SW-039
ESC
GND-002
cabin
roof
MOD-011
RHM
SW005
hazard switch
S93
RH
console
9055 BK 1
GND-001
Cabin
backpanel

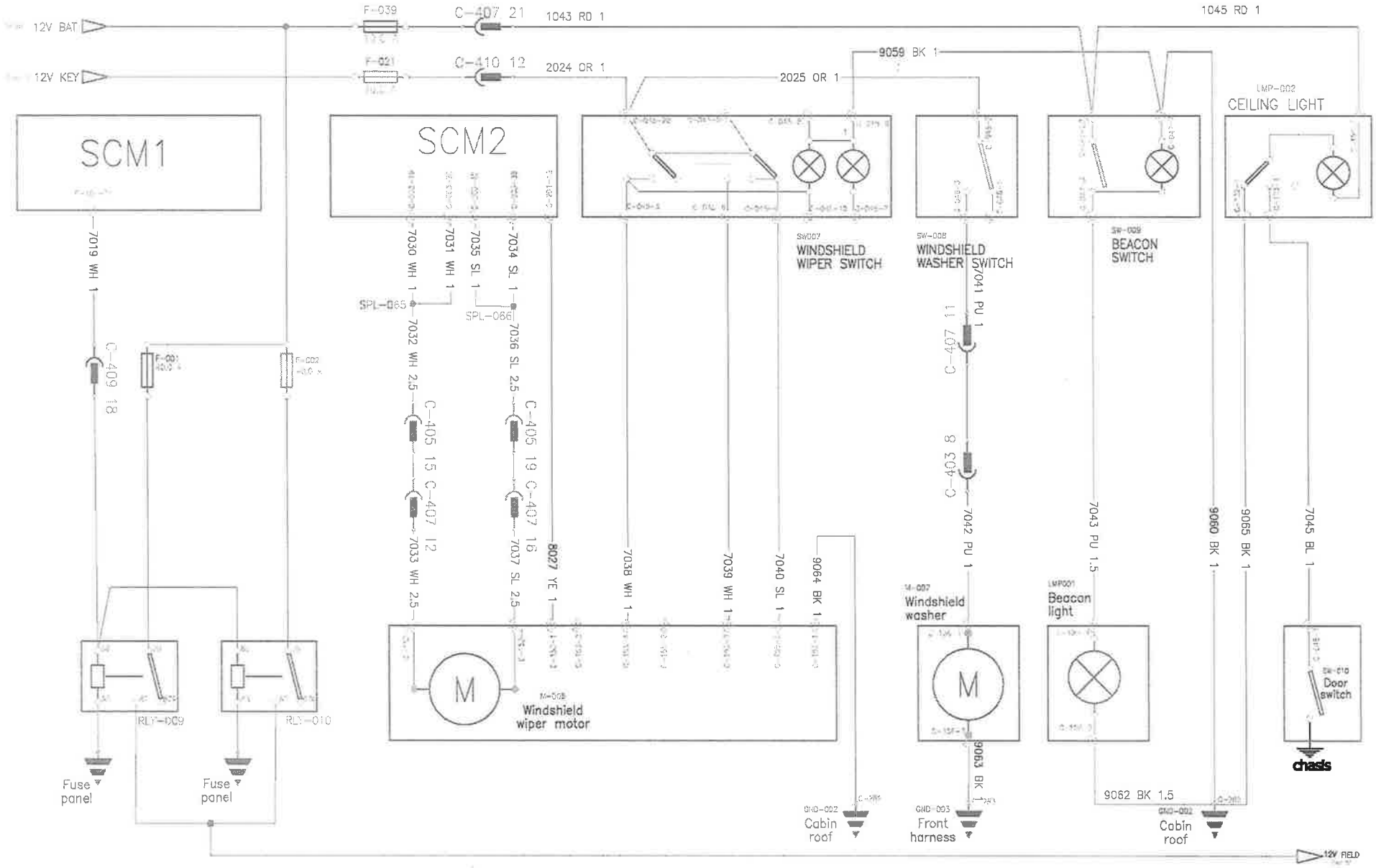
12V BAT
12V KEY
F-039
F-021
C-407 21
C-410 12
1043 RD 1
2024 OR 1
2025 OR 1
9059 BK 1
1045 RD 1
SCM1
SCM2
LMP-002
CEILING LIGHT
SW007
WINDSHIELD WIPER SWITCH
SW-008
WINDSHIELD WASHER SWITCH
SW-009
BEACON SWITCH
7019 WH 1
7030 WH 1
7031 WH 1
7035 SL 1
7034 SL 1
SPL-065
SPL-066
7032 WH 2.5
7036 SL 2.5
C-409 18
C-405 15
C-405 19
C-407 12
C-407 16
7033 WH 2.5
7037 SL 2.5
8027 YE 1
7038 WH 1
7039 WH 1
7040 SL 1
9064 BK 1
7041 PU 1
C-407 11
C-403 8
7042 PU 1
7043 PU 1.5
9060 BK 1
9065 BK 1
7045 BL 1
RLY-009
RLY-010
Fuse panel
Fuse panel
M-005
Windshield wiper motor
M-007
Windshield washer
LMP001
Beacon light
SW-010
Door switch
chasis
9063 BK 1
9062 BK 1.5
GND-002
Cabin roof
GND-003
Front harness
GND-002
Cabin roof
12V FIELD

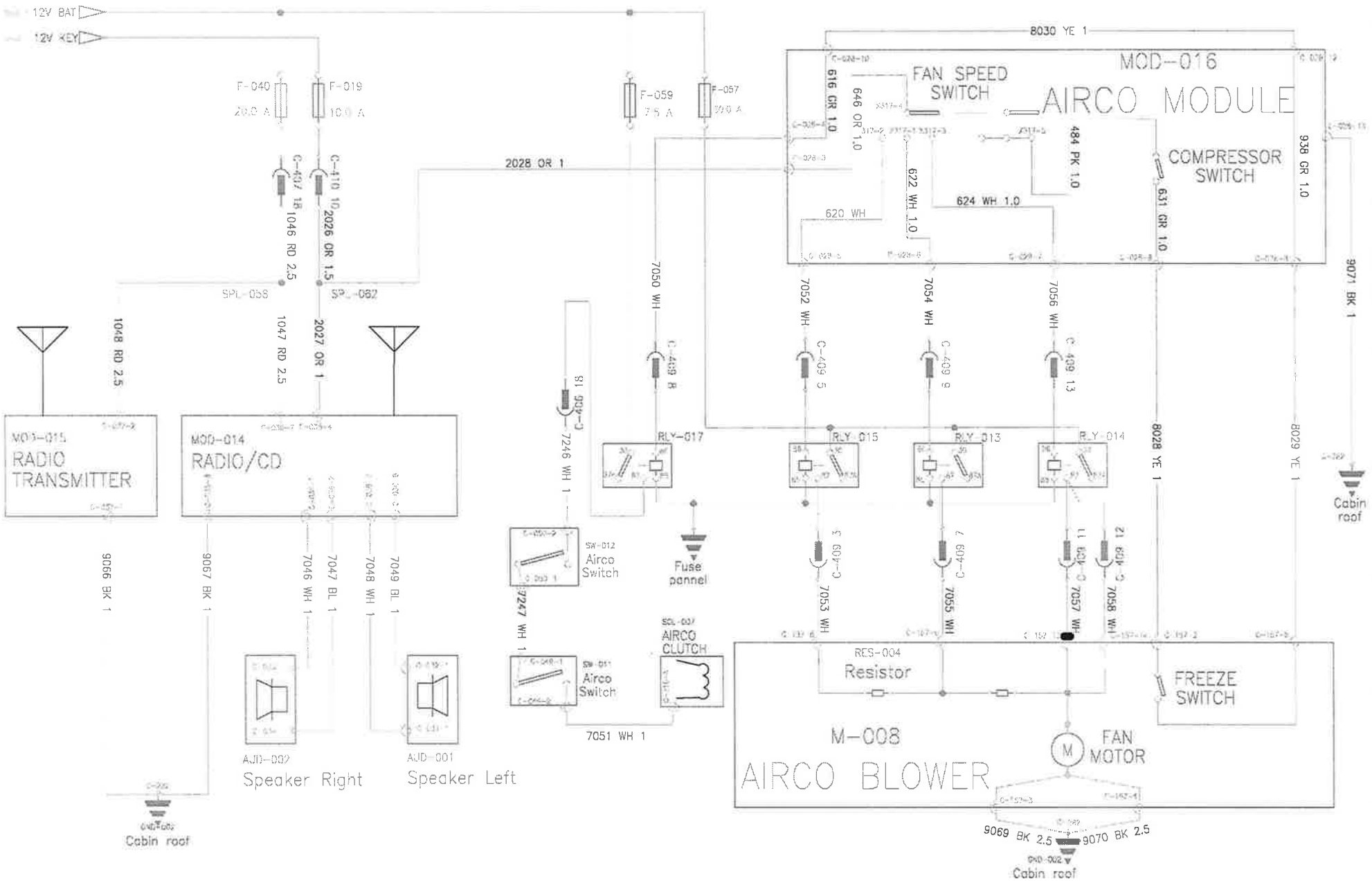
12V BAT
12V KEY
F-040
20.0 A
F-019
10.0 A
F-059
7.5 A
F-057
20.0 A
C-407 18
C-410 10
1046 RD 2.5
2026 OR 1.5
2028 OR 1
SPL-058
SPL-082
1048 RD 2.5
1047 RD 2.5
2027 OR 1
MOD-015
RADIO TRANSMITTER
MOD-014
RADIO/CD
9066 BK 1
9067 BK 1
7046 WH 1
7047 BL 1
7048 WH 1
7049 BL 1
AJD-002
Speaker Right
AJD-001
Speaker Left
Cabin roof
C-408 18
7246 WH 1
SW-012
Airco Switch
7247 WH 1
SW-011
Airco Switch
7051 WH 1
7050 WH
C-409 8
RLY-017
Fuse pannel
SOL-007
AIRCO CLUTCH
8030 YE 1
MOD-016
AIRCO MODULE
FAN SPEED SWITCH
COMPRESSOR SWITCH
616 GR 1.0
646 OR 1.0
622 WH 1.0
620 WH
624 WH 1.0
484 PK 1.0
631 GR 1.0
938 GR 1.0
9071 BK 1
7052 WH
7054 WH
7056 WH
C-409 5
C-409 9
C-409 13
RLY-015
RLY-013
RLY-014
8028 YE 1
8029 YE 1
Cabin roof
C-409 3
C-409 7
C-409 11
C-409 12
7053 WH
7055 WH
7057 WH
7058 WH
RES-004
Resistor
FREEZE SWITCH
M-008
AIRCO BLOWER
FAN MOTOR
9069 BK 2.5
9070 BK 2.5
Cabin roof

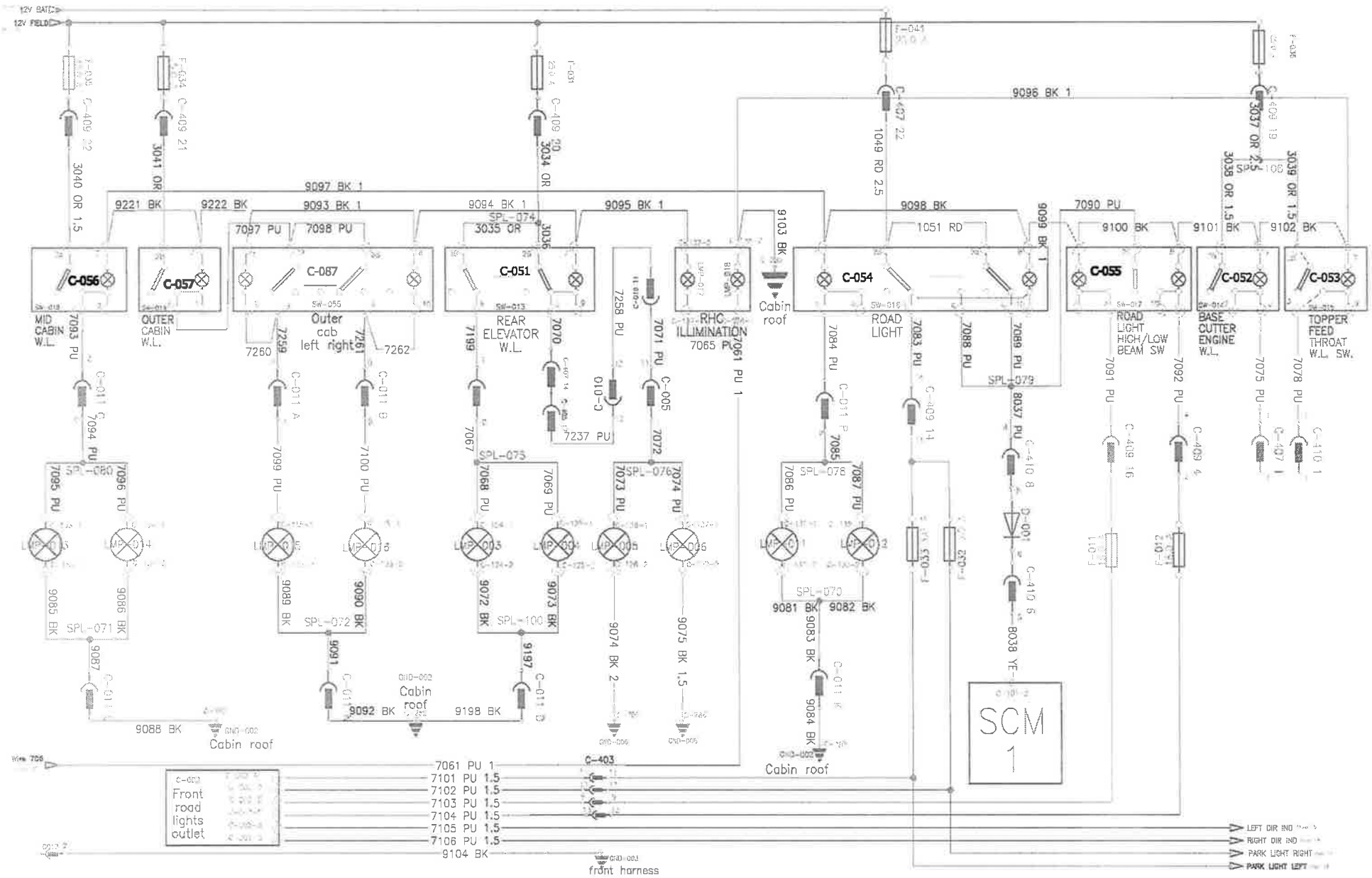
12V BATT
12V FIELD
C-056
MID CABIN W.L.
C-057
OUTER CABIN W.L.
C-087
Outer cab left right
C-051
REAR ELEVATOR W.L.
RHC ILLUMINATION
C-054
ROAD LIGHT
C-055
ROAD LIGHT HIGH/LOW BEAM SW
C-052
BASE CUTTER ENGINE W.L.
C-053
TOPPER FEED THROAT W.L. SW.
Cabin roof
SCM 1
Front road lights outlet
front harness
LEFT DIR IND
RIGHT DIR IND
PARK LIGHT RIGHT
PARK LIGHT LEFT

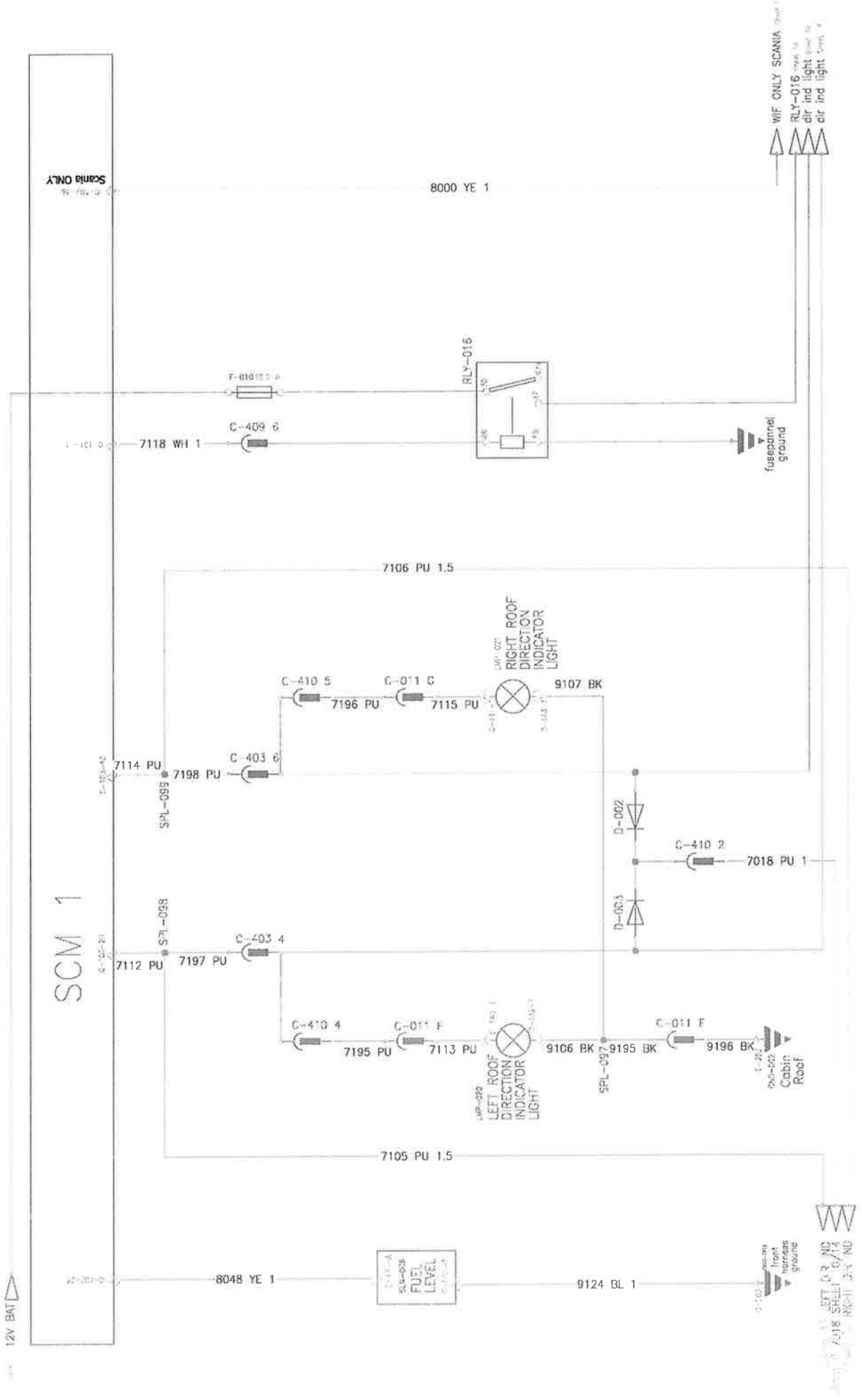
SCM 1
Scania ONLY
8000 YE 1
WIF ONLY SCANIA
RLY-016
dir ind light
dir ind light
RLY-016
F-010
C-409 6
7118 WH 1
fusepannel ground
7106 PU 1.5
RIGHT ROOF DIRECTION INDICATOR LIGHT
C-410 5
C-011 C
7196 PU
7115 PU
9107 BK
7114 PU
7198 PU
C-403 6
SPL-099
D-002
D-003
C-410 2
7018 PU 1
SPL-098
C-403 4
7112 PU
7197 PU
C-410 4
C-011 F
7195 PU
7113 PU
LEFT ROOF DIRECTION INDICATOR LIGHT
9106 BK
SPL-097
9195 BK
C-011 F
9196 BK
Cabin Roof
7105 PU 1.5
8048 YE 1
FUEL LEVEL
9124 BL 1
front harness ground
12v BAT

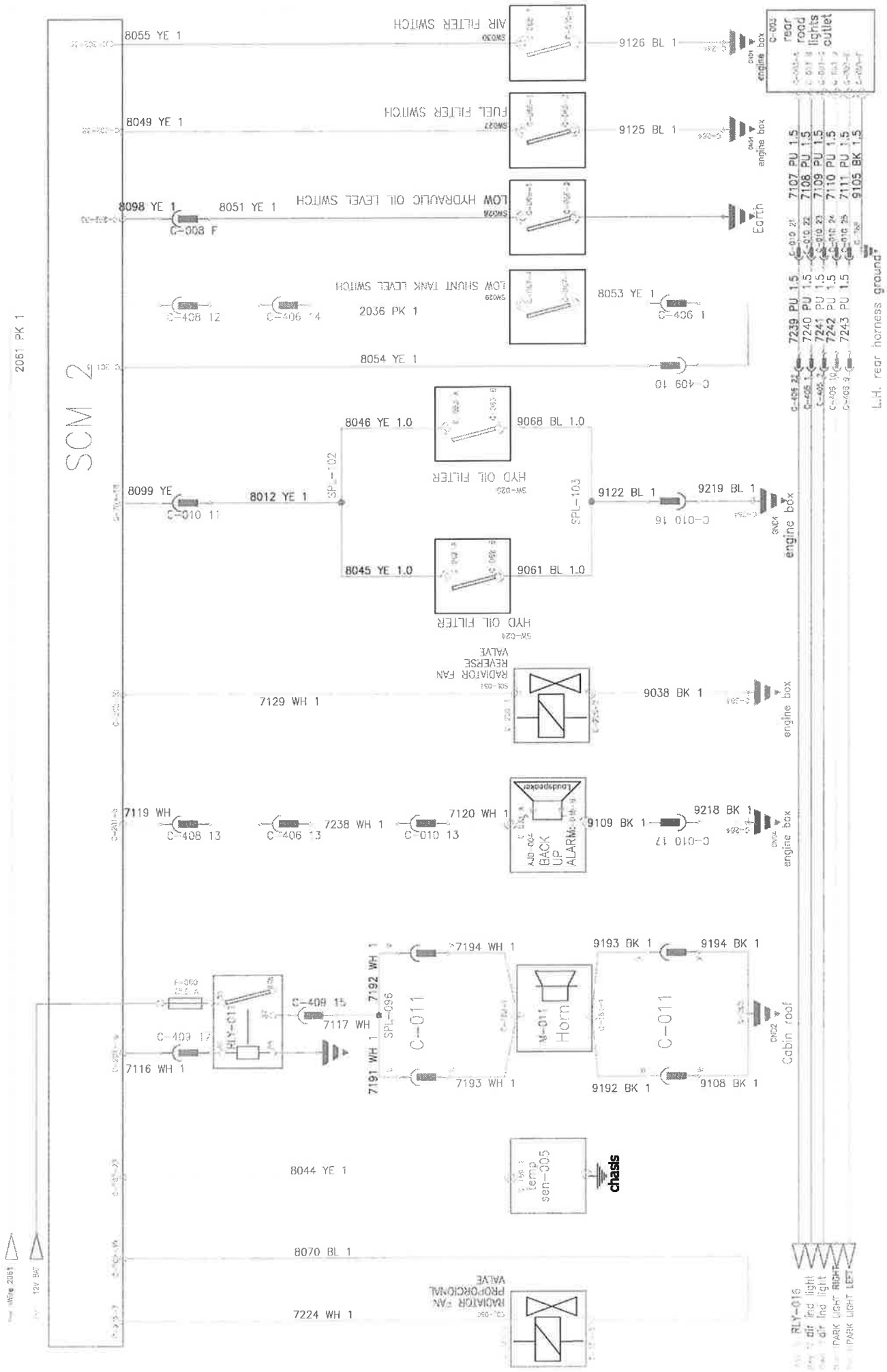
SCM 2
2061 PK 1
8055 YE 1
AIR FILTER SWITCH
9126 BL 1
engine box
rear road lights outlet
8049 YE 1
FUEL FILTER SWITCH
9125 BL 1
engine box
8098 YE 1
8051 YE 1
LOW HYDRAULIC OIL LEVEL SWITCH
C-008 F
Earth
7107 PU 1.5
7108 PU 1.5
7109 PU 1.5
7110 PU 1.5
7111 PU 1.5
9105 BK 1.5
LOW SHUNT TANK LEVEL SWITCH
2036 PK 1
8053 YE 1
C-406 12
C-406 14
C-406 1
8054 YE 1
C-409 10
7239 PU 1.5
7240 PU 1.5
7241 PU 1.5
7242 PU 1.5
7243 PU 1.5
L.H. rear harness ground
8046 YE 1.0
9068 BL 1.0
HYD OIL FILTER
8099 YE
8012 YE 1
SPL-102
SPL-103
9122 BL 1
9219 BL 1
C-010 11
C-010 16
engine box
8045 YE 1.0
9061 BL 1.0
HYD OIL FILTER
RADIATOR FAN REVERSE VALVE
7129 WH 1
9038 BK 1
engine box
7119 WH
7238 WH 1
7120 WH 1
9109 BK 1
9218 BK 1
C-408 13
C-406 13
C-010 13
Loudspeaker
BACK UP ALARM
C-010 17
engine box
7194 WH 1
9193 BK 1
9194 BK 1
7192 WH 1
C-409 15
7117 WH
SPL-096
C-011
Horn
C-011
C-409 17
7116 WH 1
7191 WH 1
7193 WH 1
9192 BK 1
9108 BK 1
Cabin roof
8044 YE 1
temp sen-005
chassis
8070 BL 1
RADIATOR FAN PROPORTIONAL VALVE
7224 WH 1
RLY-016
dir ind light
dir ind light
PARK LIGHT RIGHT
PARK LIGHT LEFT
12V BAT

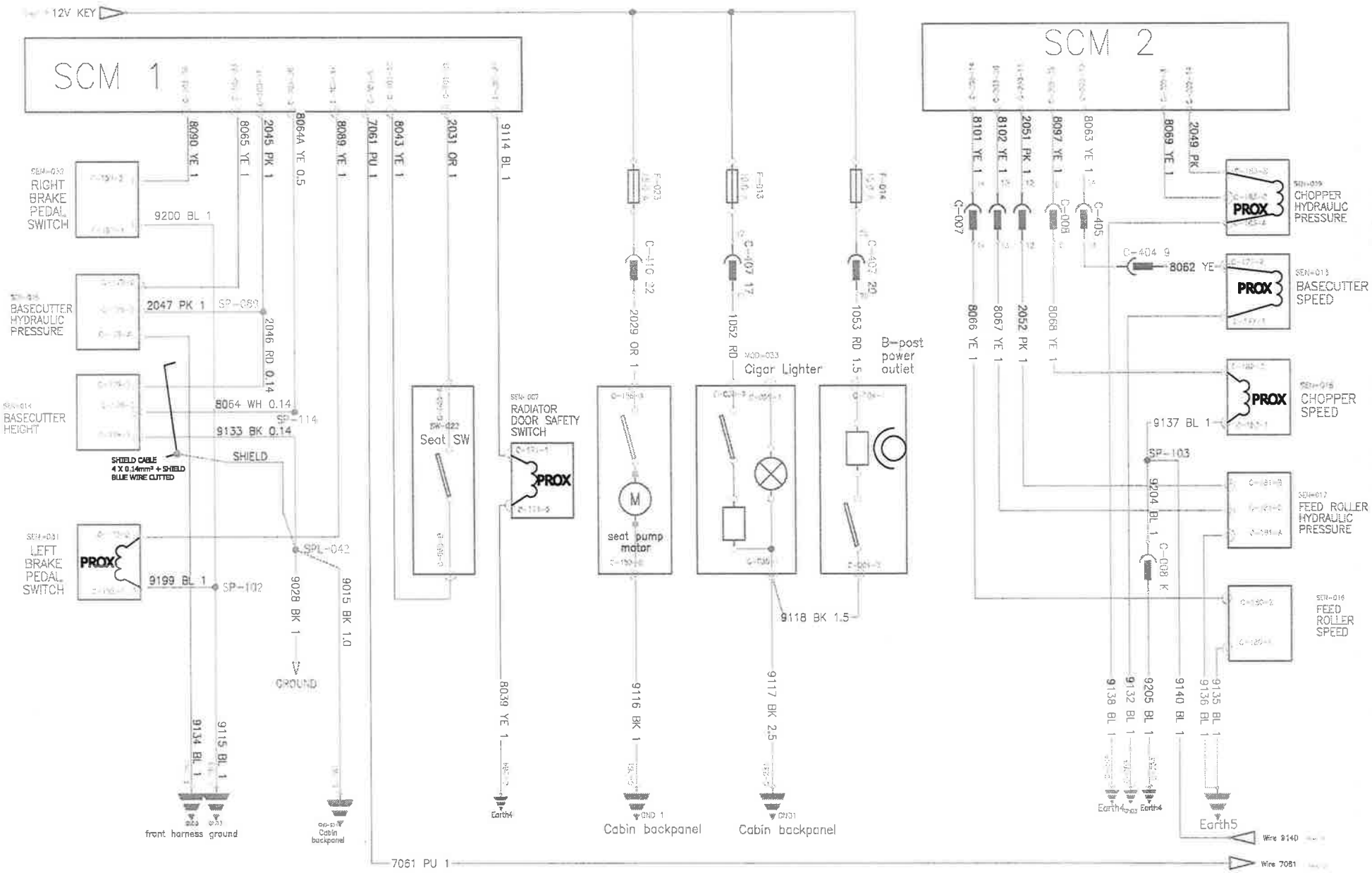
12V KEY
SCM 1
SCM 2
RIGHT BRAKE PEDAL SWITCH
BASECUTTER HYDRAULIC PRESSURE
BASECUTTER HEIGHT
LEFT BRAKE PEDAL SWITCH
PROX
SHIELD CABLE 4 X 0.14mm² + SHIELD BLUE WIRE CUTTED
SHIELD
GROUND
front harness ground
Cabin backpanel
Seat SW
RADIATOR DOOR SAFETY SWITCH
Earth4
seat pump motor
M
Cabin backpanel
Cigar Lighter
B-post power outlet
CHOPPER HYDRAULIC PRESSURE
BASECUTTER SPEED
CHOPPER SPEED
FEED ROLLER HYDRAULIC PRESSURE
FEED ROLLER SPEED
Earth5
Wire 7061

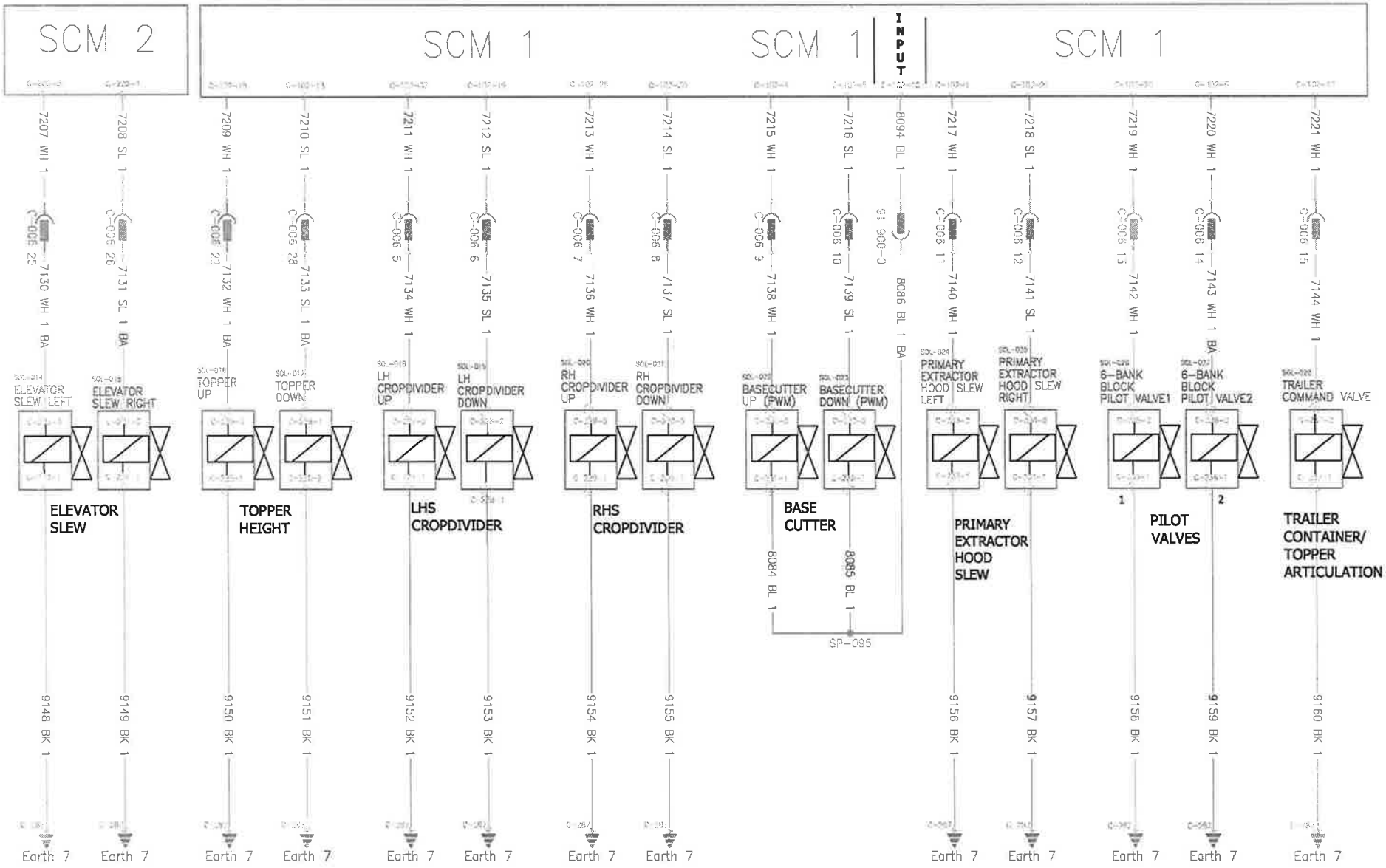
SCM 2
SCM 1
SCM 1
INPUT
SCM 1
7207 WH 1
7208 SL 1
7209 WH 1
7210 SL 1
7211 WH 1
7212 SL 1
7213 WH 1
7214 SL 1
7215 WH 1
7216 SL 1
8094 BL 1
7217 WH 1
7218 SL 1
7219 WH 1
7220 WH 1
7221 WH 1
7130 WH 1 BA
7131 SL 1 BA
7132 WH 1 BA
7133 SL 1 BA
7134 WH 1
7135 SL 1
7136 WH 1
7137 SL 1
7138 WH 1
7139 SL 1
8086 BL 1 BA
7140 WH 1
7141 SL 1
7142 WH 1
7143 WH 1 BA
7144 WH 1
ELEVATOR SLEW LEFT
ELEVATOR SLEW RIGHT
TOPPER UP
TOPPER DOWN
LH CROPDIVIDER UP
LH CROPDIVIDER DOWN
RH CROPDIVIDER UP
RH CROPDIVIDER DOWN
BASECUTTER UP (PWM)
BASECUTTER DOWN (PWM)
PRIMARY EXTRACTOR HOOD SLEW LEFT
PRIMARY EXTRACTOR HOOD SLEW RIGHT
6-BANK BLOCK PILOT VALVE1
6-BANK BLOCK PILOT VALVE2
TRAILER COMMAND VALVE
ELEVATOR SLEW
TOPPER HEIGHT
LHS CROPDIVIDER
RHS CROPDIVIDER
BASE CUTTER
PRIMARY EXTRACTOR HOOD SLEW
1
2
PILOT VALVES
TRAILER CONTAINER/ TOPPER ARTICULATION
8084 BL 1
8085 BL 1
SP-095
9148 BK 1
9149 BK 1
9150 BK 1
9151 BK 1
9152 BK 1
9153 BK 1
9154 BK 1
9155 BK 1
9156 BK 1
9157 BK 1
9158 BK 1
9159 BK 1
9160 BK 1
Earth 7

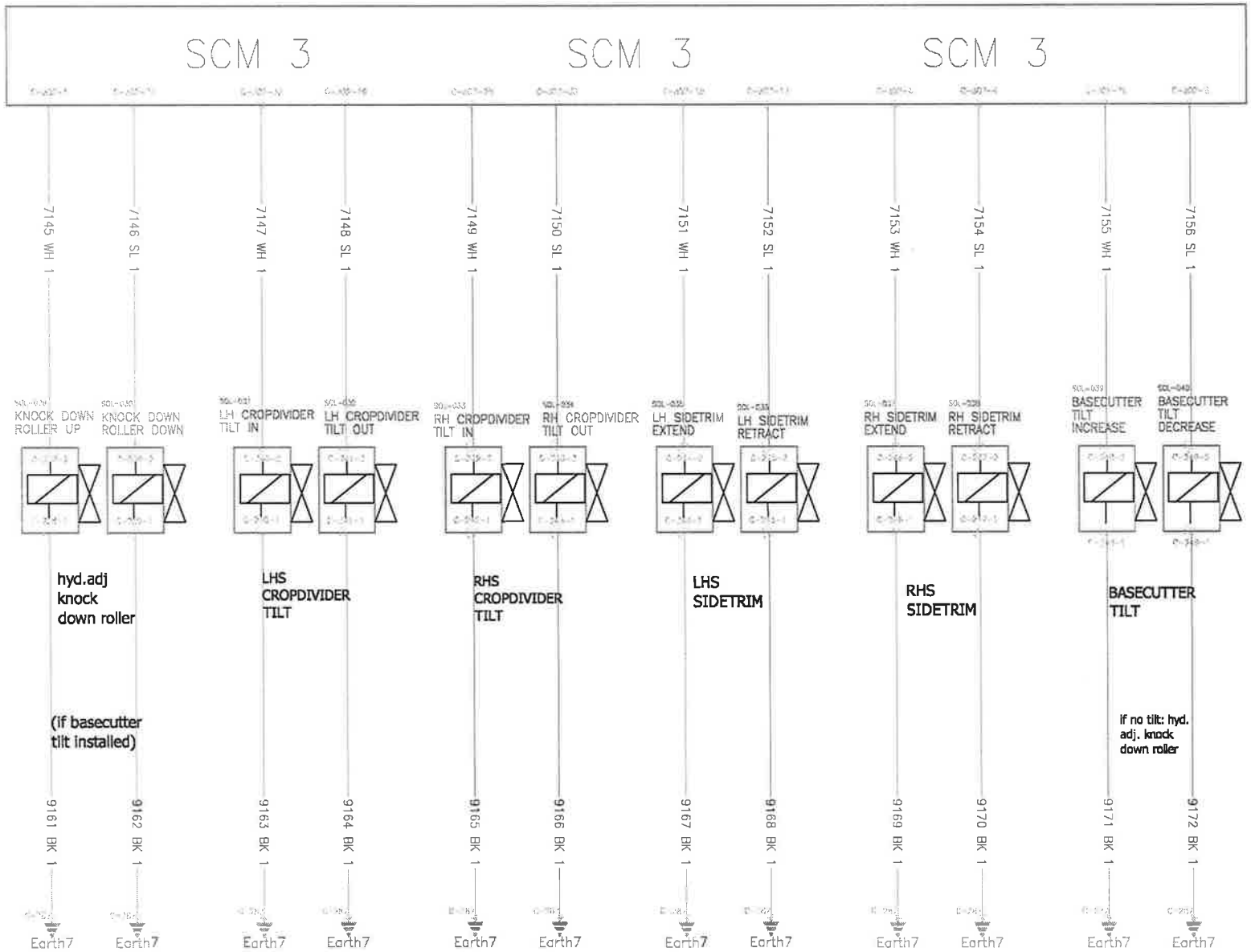
SCM 3
SCM 3
SCM 3
7145 WH 1
7146 SL 1
7147 WH 1
7148 SL 1
7149 WH 1
7150 SL 1
7151 WH 1
7152 SL 1
7153 WH 1
7154 SL 1
7155 WH 1
7156 SL 1
KNOCK DOWN ROLLER UP
KNOCK DOWN ROLLER DOWN
LH CROPDIVIDER TILT IN
LH CROPDIVIDER TILT OUT
RH CROPDIVIDER TILT IN
RH CROPDIVIDER TILT OUT
LH SIDETRIM EXTEND
LH SIDETRIM RETRACT
RH SIDETRIM EXTEND
RH SIDETRIM RETRACT
BASECUTTER TILT INCREASE
BASECUTTER TILT DECREASE
hyd.adj knock down roller
LHS CROPDIVIDER TILT
RHS CROPDIVIDER TILT
LHS SIDETRIM
RHS SIDETRIM
BASECUTTER TILT
(if basecutter tilt installed)
if no tilt: hyd. adj. knock down roller
9161 BK 1
9162 BK 1
9163 BK 1
9164 BK 1
9165 BK 1
9166 BK 1
9167 BK 1
9168 BK 1
9169 BK 1
9170 BK 1
9171 BK 1
9172 BK 1
Earth7

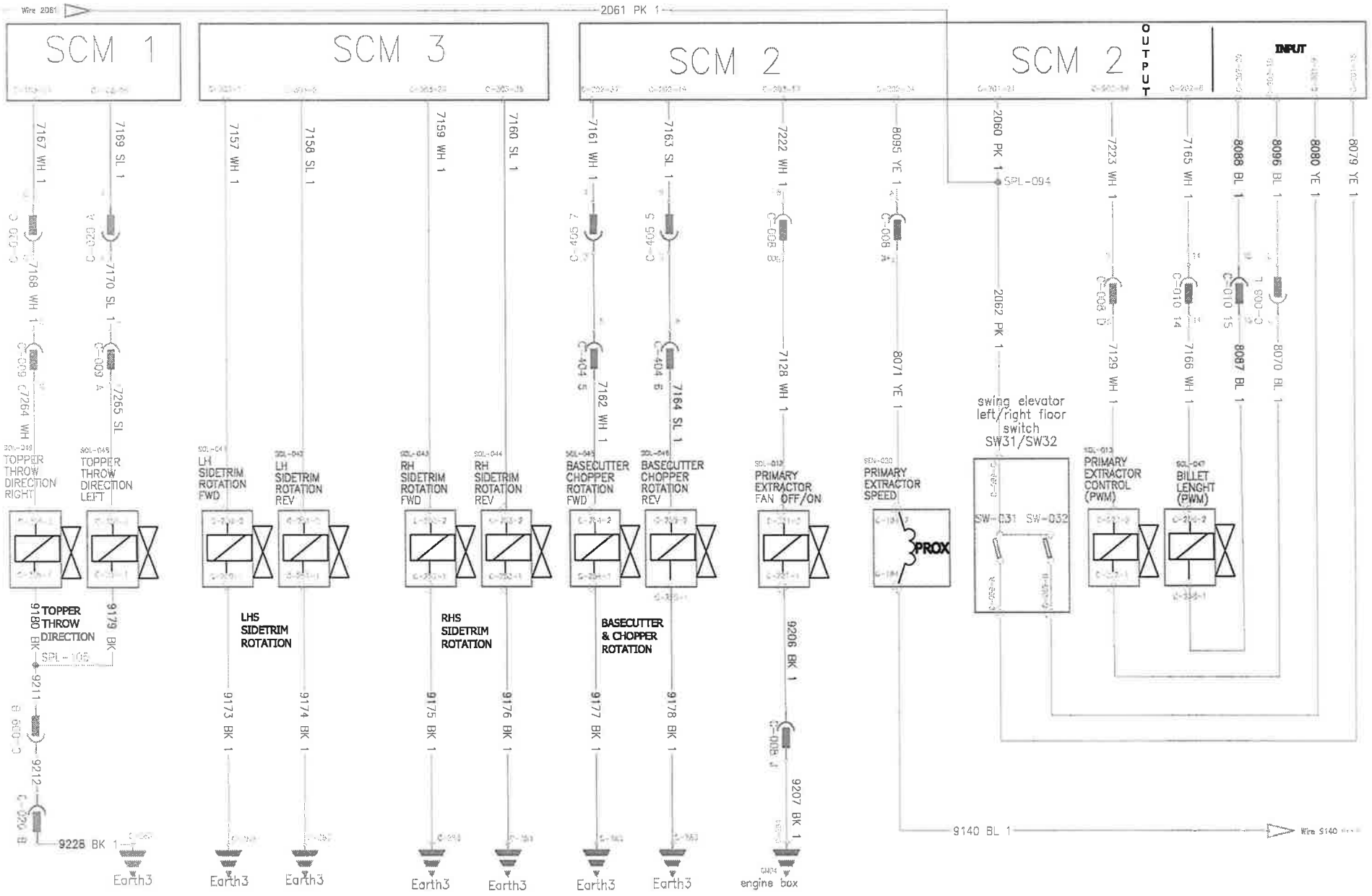
Wire 2061
2061 PK 1
SCM 1
SCM 3
SCM 2
SCM 2
OUTPUT
INPUT
7167 WH 1
7169 SL 1
7168 WH 1
7170 SL 1
7264 WH
7265 SL
TOPPER THROW DIRECTION RIGHT
TOPPER THROW DIRECTION LEFT
9180 BK
9179 BK
TOPPER THROW DIRECTION
SPL-106
9211
9212
9228 BK 1
Earth3
7157 WH 1
7158 SL 1
LH SIDETRIM ROTATION FWD
LH SIDETRIM ROTATION REV
LHS SIDETRIM ROTATION
9173 BK 1
9174 BK 1
Earth3
Earth3
7159 WH 1
7160 SL 1
RH SIDETRIM ROTATION FWD
RH SIDETRIM ROTATION REV
RHS SIDETRIM ROTATION
9175 BK 1
9176 BK 1
Earth3
Earth3
7161 WH 1
7163 SL 1
7162 WH 1
7164 SL 1
BASECUTTER CHOPPER ROTATION FWD
BASECUTTER CHOPPER ROTATION REV
BASECUTTER & CHOPPER ROTATION
9177 BK 1
9178 BK 1
Earth3
Earth3
7222 WH 1
7128 WH 1
PRIMARY EXTRACTOR FAN OFF/ON
9206 BK 1
9207 BK 1
engine box
8095 YE 1
8071 YE 1
PRIMARY EXTRACTOR SPEED
PROX
2060 PK 1
SPL-094
2062 PK 1
swing elevator left/right floor switch SW31/SW32
SW-031
SW-032
7223 WH 1
7129 WH 1
PRIMARY EXTRACTOR CONTROL (PWM)
7165 WH 1
7166 WH 1
BILLET LENGHT (PWM)
8088 BL 1
8087 BL 1
8096 BL 1
8070 BL 1
8080 YE 1
8079 YE 1
9140 BL 1
Wire 9140

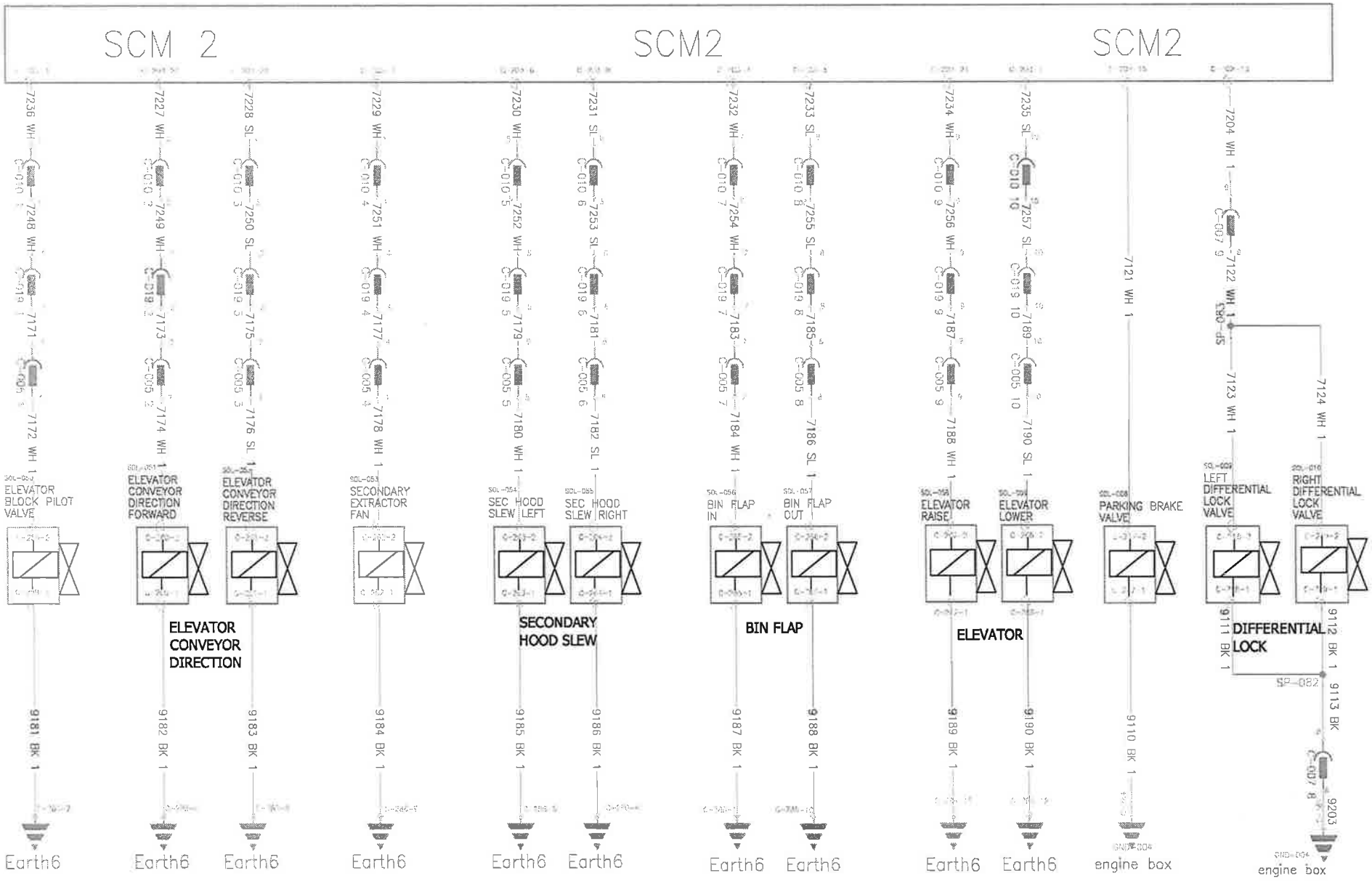
SCM 2
SCM2
SCM2
7236 WH
7248 WH
7171
7172 WH
ELEVATOR BLOCK PILOT VALVE
9181 BK 1
Earth6
7227 WH
7249 WH
7173
7174 WH
ELEVATOR CONVEYOR DIRECTION FORWARD
ELEVATOR CONVEYOR DIRECTION
9182 BK 1
Earth6
7228 SL
7250 SL
7175
7176 SL
ELEVATOR CONVEYOR DIRECTION REVERSE
9183 BK 1
Earth6
7229 WH
7251 WH
7177
7178 WH
SECONDARY EXTRACTOR FAN
9184 BK 1
Earth6
7230 WH
7252 WH
7179
7180 WH
SEC HOOD SLEW LEFT
9185 BK 1
Earth6
7231 SL
7253 SL
7181
7182 SL
SEC HOOD SLEW RIGHT
9186 BK 1
Earth6
SECONDARY HOOD SLEW
7232 WH
7254 WH
7183
7184 WH
BIN FLAP IN
9187 BK 1
Earth6
7233 SL
7255 SL
7185
7186 SL
BIN FLAP OUT
9188 BK 1
Earth6
BIN FLAP
7234 WH
7256 WH
7187
7188 WH
ELEVATOR RAISE
9189 BK 1
Earth6
7235 SL
7257 SL
7189
7190 SL
ELEVATOR LOWER
9190 BK 1
Earth6
ELEVATOR
7121 WH 1
PARKING BRAKE VALVE
9110 BK 1
engine box
7204 WH 1
7122 WH 1
7123 WH 1
7124 WH 1
LEFT DIFFERENTIAL LOCK VALVE
RIGHT DIFFERENTIAL LOCK VALVE
9111 BK 1
9112 BK 1
9113 BK
9203
engine box
DIFFERENTIAL LOCK

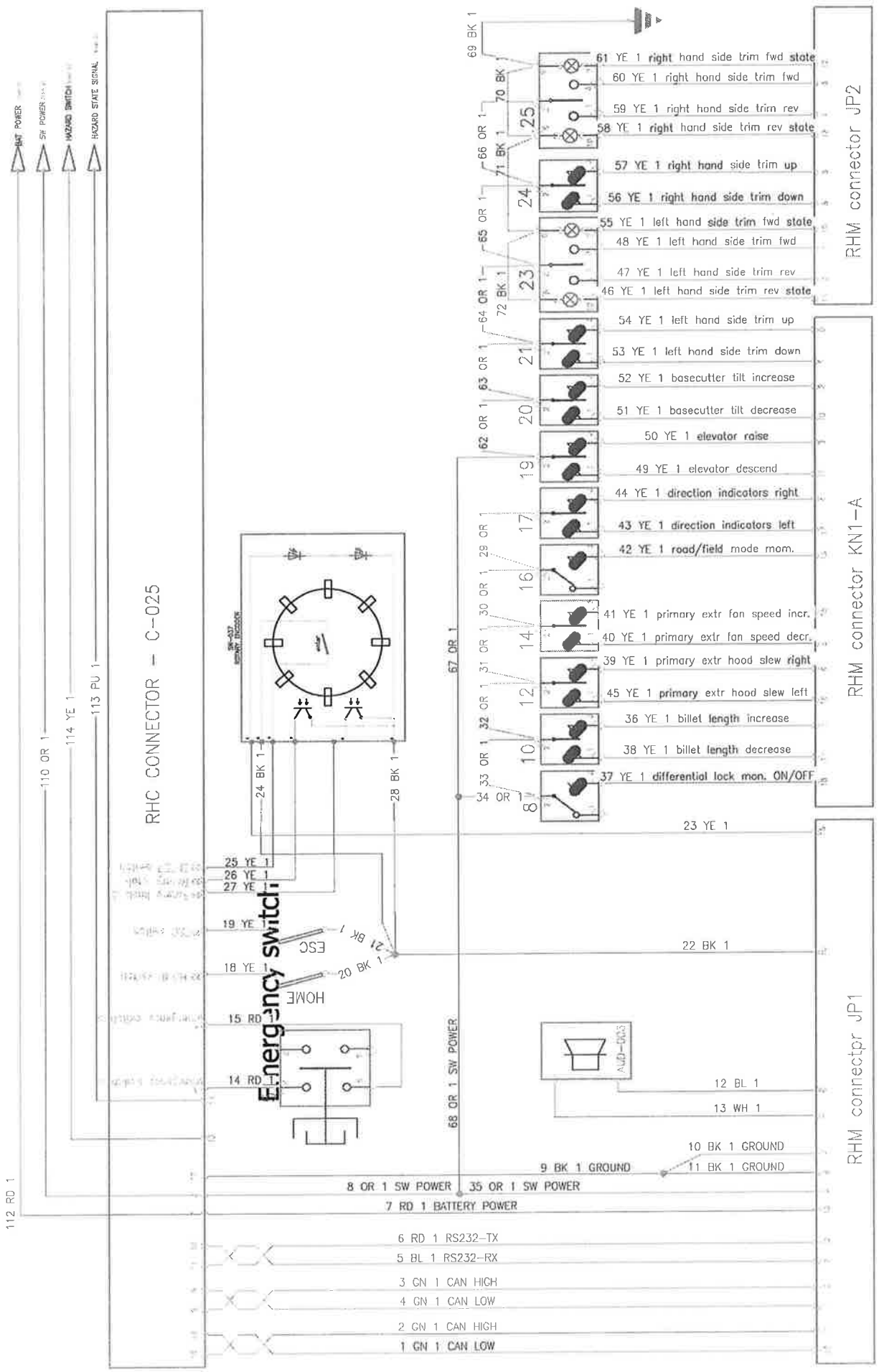
BAT POWER
SW POWER
HAZARD SWITCH
HAZARD STATE SIGNAL
RHC CONNECTOR – C-025
110 OR 1
114 YE 1
113 PU 1
112 RD 1
24 BK 1
28 BK 1
25 YE 1
26 YE 1
27 YE
19 YE
18 YE 1
15 RD
14 RD 1
ESC
HOME
Emergency switch
21 BK 1
20 BK 1
67 OR 1
68 OR 1 SW POWER
69 BK 1
70 BK
66 OR 1
71 BK 1
65 OR 1
64 OR 1
72 BK 1
63 OR 1
62 OR 1
29 OR 1
30 OR 1
31 OR 1
32 OR 1
33 OR 1
34 OR 1
61 YE 1 right hand side trim fwd state
60 YE 1 right hand side trim fwd
59 YE 1 right hand side trim rev
58 YE 1 right hand side trim rev state
57 YE 1 right hand side trim up
56 YE 1 right hand side trim down
55 YE 1 left hand side trim fwd state
48 YE 1 left hand side trim fwd
47 YE 1 left hand side trim rev
46 YE 1 left hand side trim rev state
54 YE 1 left hand side trim up
53 YE 1 left hand side trim down
52 YE 1 basecutter tilt increase
51 YE 1 basecutter tilt decrease
50 YE 1 elevator raise
49 YE 1 elevator descend
44 YE 1 direction indicators right
43 YE 1 direction indicators left
42 YE 1 road/field mode mom.
41 YE 1 primary extr fan speed incr.
40 YE 1 primary extr fan speed decr.
39 YE 1 primary extr hood slew right
45 YE 1 primary extr hood slew left
36 YE 1 billet length increase
38 YE 1 billet length decrease
37 YE 1 differential lock mon. ON/OFF
RHM connector JP2
RHM connector KN1-A
23 YE 1
22 BK 1
12 BL 1
13 WH 1
10 BK 1 GROUND
11 BK 1 GROUND
9 BK 1 GROUND
8 OR 1 SW POWER
35 OR 1 SW POWER
7 RD 1 BATTERY POWER
6 RD 1 RS232-TX
5 BL 1 RS232-RX
3 GN 1 CAN HIGH
4 GN 1 CAN LOW
2 GN 1 CAN HIGH
1 GN 1 CAN LOW
RHM connectpr JP1

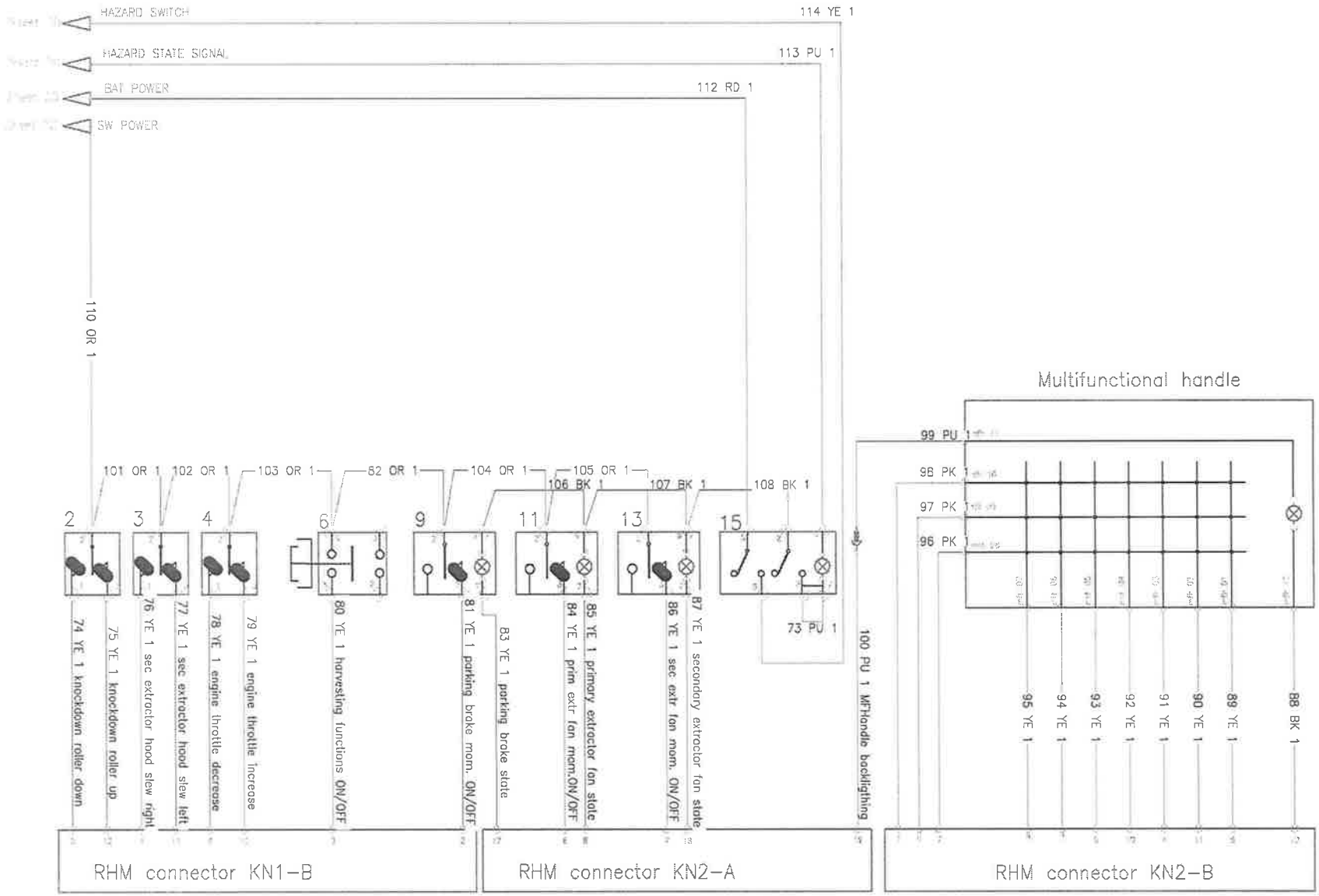
HAZARD SWITCH
HAZARD STATE SIGNAL
BAT POWER
SW POWER
114 YE 1
113 PU 1
112 RD 1
110 OR 1
Multifunctional handle
99 PU 1
98 PK 1
97 PK 1
96 PK 1
101 OR 1
102 OR 1
103 OR 1
82 OR 1
104 OR 1
105 OR 1
106 BK 1
107 BK 1
108 BK 1
2
3
4
6
9
11
13
15
74 YE 1 knockdown roller down
75 YE 1 knockdown roller up
76 YE 1 sec extractor hood slew right
77 YE 1 sec extractor hood slew left
78 YE 1 engine throttle decrease
79 YE 1 engine throttle increase
80 YE 1 harvesting functions ON/OFF
81 YE 1 parking brake mom. ON/OFF
83 YE 1 parking brake state
84 YE 1 prim extr fan mom.ON/OFF
85 YE 1 primary extractor fan state
86 YE 1 sec extr fan mom. ON/OFF
87 YE 1 secondary extractor fan state
73 PU 1
100 PU 1 MFHandle backlighting
95 YE 1
94 YE 1
93 YE 1
92 YE 1
91 YE 1
90 YE 1
89 YE 1
88 BK 1
RHM connector KN1-B
RHM connector KN2-A
RHM connector KN2-B

The letters used can be found in the list below:

Symbol	Description
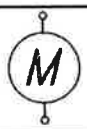	Electric motor, actuator
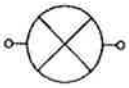	Bulb
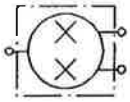	Double action lamp
	Diode
	LED (light emitting diode)
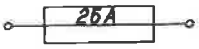	Fuse
	Socket (female)
	Plug (male)
	Automatic fuse
	Vibrating alarm
	Inductive sensor
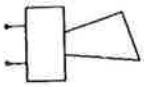	Horn
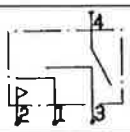	Ignition switch
	Control valves solenoid

Symbol	Description
	Flasher unit
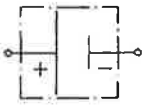	Battery
	Manometer
	Electro-magnetic clutch
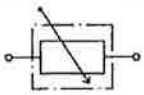	Adjustable resistance
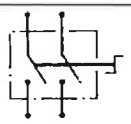	Bipolar switch
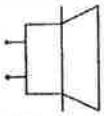	Speaker
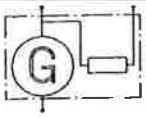	Alternator
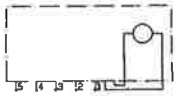	Wiper motor
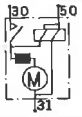	Electric starter motor
	Switch normally closed, manually controlled
	Switch normally open, mechanically controlled by pedal
	Switch normally open, mechanically controlled
	Switch normally open, mechanically controlled

Symbol	Description
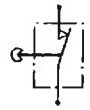	Switch normally closed, mechanically controlled
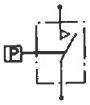	Switch normally open, controlled by pressure emitter
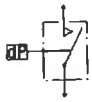	Switch normally open, controlled by sub-pressure
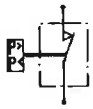	Switch normally closed, controlled by high-pressure
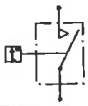	Switch normally open, controlled by temperature emitter
	Switch normally closed, controlled by pressure emitter
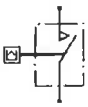	Switch normally open, controlled by the grains level indicator
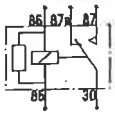	Relay
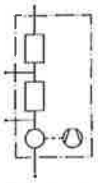	Air conditioning blower motor
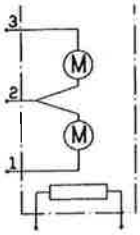	Mirror motor

NOTE: *The switches are put in the position while they are removed from the harvester.*

CHARGE SYSTEM CIRCUIT OPERATION

Description

The Alternator (B+) connector is connected to the battery through the terminal B+ in the Starter Motor and is grounded with the engine.

The Alternator is automatically excited and does not require an excitation circuit. The charge system output is controlled by a set of voltage integral regulator and brush. The regulator is adjusted to 14.21 volts.

The Alternator has the temperature compensated so that the output will fall when it heats.

Charge system circuit troubleshooting

Prior to troubleshooting the starter system, check if the following operation conditions are followed :

A. The batteries are totally charged and all the connections are clean and tightened.

B. Check all connectors for the complete installation, loosened, corroded, removed or bent terminals.

Table of symptoms of the charge system

NOTE: *The batteries must be totally charged and all the connections are clean and tightened. Use a multimeter for these tests.*

⚠ CAUTION ⚠

Do not use a test light with automatic power supply in any of these tests. The use of test lights with automatic power supply can cause damages in the components of this system.

Symptom	Possible Cause	Reference / Test
The system does not charge or has low charge. The battery loses charge.	Alternator belt	Check the belt
	Alterntor Circuit B+	A - Test of the Charge System Output
System overloaded	Alternator	A - Test of the Charge System Output, test points 2-4

Diagnostic test of the charge system

NOTE: *The batteries must be totally charged and all the connections are clean and tightened. Use a multimeter for these tests. To test the battery and the services, see the battery section in the services manual.*

⚠ CAUTION ⚠

Do NOT use a test light with automatic power supply in any of these tests. The use of test lights with automatic power supply can cause damages in the components of this system.

A - Test of the charge System Output

	Test point	Good reading	Possible cause for poor reading
1	Start the engine and run it at 1200 rpm. Measure the battery voltage.	12.8 - 14.5 volts If the reading is good, the charge system is working properly.	High resistance between the battery and the alternator's terminal B+ Go to the next test point.
2	Connect the multimeter negative lead in the battery positive terminal and the positive lead in the terminal B+ of the starter motor. Read the voltage.	Less than 0.4 Volts. If the reading is good, the circuits are OK. Continue with the next step.	High resistance between the battery and the starter motor terminal 30. Fix / replace the wiring according to the need.
3	Connect the multimeter positive lead in the alternator terminal B+ and the negative lead in the terminal B+ of the starter motor. Read the voltage.	Less than 0.4 Volts. If the reading is good, continue with the next step.	High resistance between the starter motor terminal 30 and the alternator terminal B+. Fix / replace the wiring according to the need.
4	Check the presence of 12 volts in the alternator terminal B+ while turn ON and OFF several charges (lights, heater blowers, etc.)	The voltage varies between 12.8 and 14.5 volts in response to the charge applied. If the reading is good, the charge system is working properly.	Alternator. Go to the next test point.
5	Turn the ignition key OFF. Measure the resistance between the alternator housing and the engine ground.	Less than 1 ohm. If the reading is good, fix or replace the alternator.	High resistance in the alternator circuit in the engine ground. Clean the surfaces between the alternator and the engine assembly. Assure that all the assemblies are clean and tightened.

STARTER SYSTEM CIRCUIT OPERATION

Description

When the ignition key is in the "START" position and the engine's safety and protection systems are OK, the current flows through the starter motor relay coil side and, then, to the ground. It closes the starter motor relay switch side and allows the current to flow to energize the starter motor solenoid, making it to work.

Starter motor circuit troubleshooting

Prior to troubleshooting the starter system, check if the operation conditions are followed:

A. The batteries are totally charged and all the connections are clean and tightened.

B. Battery switch closed (general switch).

C. Check the fuses F-006.

D. Check if the hydraulic oil level is OK.

E. Check if the service door of the engine compartment right side is closed. **NOTE:** *If the item D and E are abnormal, a message will be displayed in the monitor.* **Example:** *Service Door Open code A2204*

Table of symptoms of the starter system

NOTE: *The batteries must be totally charged and all the connections are clean and tightened. Use a multimeter for these tests.*

⚠ CAUTION ⚠

Do not use a test light with automatic power supply in any of these tests. The use of test lights with automatic power supply can cause damages in the components of this system.

Symptom	Possible Cause	Reference / Test
The engine does not start when the start is given in the ignition key.	Fuse F006	A - Test of the ignition key power supply
	Ignition key	B - Test of the ignition key energy
	Module SCM 2 (input and output)	C - Test of the power supply to the module SCM 2
	Circuits of the starter motor relay	D - Test the starter relay circuit RLY-019
	Starter relay RLY-019	If the test D is OK, install a new starter motor relay
	Starter relay 12/24 Volts	E - Test the relay circuit 12/24 Volts
	Starter motor circuit	F - Test the starter motor circuit
	Starter motor (M)	G - Test a new starter motor

Diagnostic test of the starter system

A - Test of the ignition key power supply circuit

	Test point	Good reading	Possible cause for poor reading
1	Check if there are 12 volts in the ignition key connector (pin 1), RD.	12 volts If the reading is good, continue with the next step.	Open the circuit between the fuse F037 and the ignition key connector RD, page 2.
2	Turn the key in the first position Check if there are 12 volts in the key connector (pin 5 and t), OR.	12 volts If the reading is good, continue with the next step.	Ignition key
3	Put the ignition key in the "Start" position. Check if there are 12 volts in the ignition key connector (pin 2), YE.	12 volts If the reading in good, the ignition key is OK.	Ignition key

B - Test of the ignition key component SW-002

	Test point	Good reading	Possible cause for poor reading
1	Disconnect the ignition key connector. While holding the key in the "Start" position, measure between the (pin 1 and 2).	Less than 1 ohm. If the reading is good, continue with the next step.	Ignition key
2	While holding the ignition key in the "Start" position, measure between the (pin 1 and 5 or pin 1 and 6).	Less than 1 ohm. If the reading is good, continue with the next step.	Ignition key
3	Put the ignition key in the first position, measure between the (pin 1 and 5 or pin 1 and 6).	Less than 1 ohm. If the reading is good, continue with the next step.	Ignition key
4	Put the ignition key in the “OFF” position, measure between the (pin 1 and 5 or pin 1 and 2).	The circuit must be open. If the reading in good, the ignition key is OK.	Ignition key

C - Test of the power supply to the module SCM 2

	Test point	Good reading	Possible cause for poor reading
1	Disconnect the connector C-201 from the module SCM 2. While holding the key in the "Start" position, measure (pin 19 input to the module).	12 Volts If the reading is good, continue with the next step.	Open the circuit of the ignition key and the pin 19 of the SCM 2 module connector, connector C-202-19.
2	Assemble the connector and hold the ignition key in the "Start" position, measure the (pin 24, which is the output of the module).	12 Volts If the reading is good, the module is OK.	Module SCM2

D - Test the starter motor relay circuit (RLY-019)

	Test point	Good reading	Possible cause for poor reading
1	Remove the relay RLY-019 from the starter motor. Put the ignition key in the "Start" position. Check if there are 12 volts in the starter relay terminal (pin 1).	12 volts If the reading is good, continue with the next step.	Check the circuit between the starter motor relay connector (pin 1) and the SCM 2 module connector C-201-24.
2	Turn the ignition key OFF. Check if there are 12 volts in the relay RLY-019 terminal of the starter motor (pin 3).	12 volts If the reading is good, continue with the next step.	Check the fuse F-006
3	Check if there is ground in the relay RLY-019 terminal of the starter motor (pin 2).	Approximately 1 ohm If the reading is good, go to the next test point.	Check the circuit between the starter motor relay terminal (pin 2) and the ground of the fuse panel circuit.
4	Measure the resistance of the starter motor relay terminal (pin 5) and the relay terminal 12/24 Volts (pin 50 A).	Less than 1 ohm. If the reading is good, the starter relay circuits are OK.	Measure the circuit between the starter motor relay terminal (pin 5) and the relay terminal 12/24 Volts (pin 50 A).

NOTE: *At the moment that the connector C-409 of the fuse panel needs to be removed, remove the relay RLY-019 before.*

E - Test of the relay circuit 12/24 Volts

	Test point	Good reading	Possible cause for poor reading
1	With the ignition key turned OFF, the relay 12/24 volts circuit is in **PARALLEL**. Check if there are 12 volts in the (pins 30 and 30A).	12 volts If the reading is good, continue with the next step.	Check the relay 12/24V circuit and the batteries. Check the relay 12/24V fuse between the (pins 30 and 30A).
2	Check if there is ground in the relay 12/24V terminals (pin 31 and 31A).	Approximately 1 ohm If the reading is good, continue with the next step.	Check the relay 12/24V circuit and the batteries. Check the relay 12/24V fuse between the (pins 31 and 31A).
3	With the key in the position "Start", a switching will occur in the 12/24V relay allowing that the circuit become "**SERIAL**". Check if there are 12 volts in the (pin 50A).	12 volts If the reading is good, continue with the next step.	Check the circuit between the (50A) of the 12/24V relay and the (pin 5) of the starter motor relay.
4	While holding the ignition key in the "START" position, the 12/24V relay contacts will change becoming the circuit a **24 volts** circuit (pins 30 and 31A) and the (pins 30A and 50).	24 volts If the reading is good, the starter relay circuit is OK.	Check the existing fuses on 12/24V relay in the (pins 30A and pin 31).

F - Test of the starter motor circuit

	Test point	Good reading	Possible cause for poor reading
1	Check if there are 12 volts in the starter motor relay terminal B+ (30).	12 volts If the reading is good, the starter relay circuit is OK.	Open the circuit between the starter terminal B+ (30) and the battery positive terminal RD, page 1 **Caution:** When performing the continuity test in this circuit, check if it is disconnected from the battery positive terminal. Not doing it can cause damages to the test gauge.

F - Test of the starter motor circuit

	Test point	Good reading	Possible cause for poor reading
2	While holding the ignition key in the "Start" position, measure the voltage between the starter motor terminal B+ (30) and the battery positive terminal.	Less than 0.5 Volts. If the reading is good, continue with the next step.	High resistance in the circuit (RD), page 1. Clean and tight the battery positive terminal connections.
3	While keeping the ignition key in the "Start" position, measure between the starter motor box and the battery negative terminal.	Less than 0.5 Volts. If the reading is good, the starter relay circuit is OK.	High resistance in the circuit (BK), page 1.

AUTO TRACKER SYSTEM CIRCUIT OPERATION

Description

The Auto Tracker is an electronic system that controls the harvester suspension according to the basecutter work pressure and work height, this calibration will be determined by the operator due to the cane variety and density and the dislocation speed.

The system is composed by several components that work together, from hydraulic to electronic, that will send a signal from the pressure and position (height) sensor to the modules.

When the blades (knives) of the basecutter get closer to the ground, the pressure sensor located in the basecutter block will emit a signal to the module, informing the pressure increase, making the system to auto track it, correcting the height.

When the machine is out of the programmed work height, the position sensor located above the volume converter (nitrogen cylinder) also sends a signal to the module, which will make the height correction, raising or lowering the machine.

Auto Tracker operation troubleshooting

Prior to troubleshooting the operation system, check if the operation conditions are followed:

A. The batteries are totally charged and all the connections are clean and tightened.

B. Check all connectors for the complete installation, loosened, corroded, removed or bent terminals.

C. Check in the display if any error code of the Auto Tracker (icon of the basecutter blinking) is displayed.

D. Check the cylinder's nitrogen gas charge

E. Check the oil volume in the system.

Symptoms table for the Auto Tracker operation

NOTE: *The batteries must be totally charged and all the connections are clean and tightened. Use a multimeter for these tests.*

⚠ CAUTION ⚠

Do not use a test light with automatic power supply in any of these tests. The use of test lights with automatic power supply can cause damages in the components of this system.

Symptom	Possible Cause	Reference / Test
Cannot view the basecutter height in the display, position 0 to 400	Reservoir oil (TCH FLUID)	A - Check the oil level
	Air in the system	Bleed air from the system
	Nitrogen Gas from the volume converter	B - Check the nitrogen gas pressure
	Electrical circuits	C - Test of power supply and sensor grounding
	Module SCM 1	D - Check the sensor return circuit to the module (SCM 1)
	Position sensor	Test the sensor

continued

Symptom	Possible Cause	Reference / Test
Cannot view the basecutter system pressure	Electrical circuit	E - Test of power supply and grounding
	Basecutter pressure sensor	Test the sensor
Cannot harvest in the automatic mode	Auto calibration	Check if it was calibrated correctly
	Clean implements / Rotation defined	Check if the implements are turned ON and the minimal rotation was defined

Diagnostic test of the Auto Tracker system

A - Check the oil level and bleed the air from the system

	Test point	Good reading	Possible cause for poor reading
1	To check the correct oil level of the auto tracker system, the valve (register) must be totally open and the machine totally lowered. The oil level must be in the indicated mark (upper mark) of the reservoir that is located below the cabin.	If the level is correct, continue with the next step.	Check all the circuit to see if there is oil leakage.
2	With the register open, the air must be bled from the system (bleeding) raising the suspension up to the end and lowering it several times; wait approximately 10 seconds for the oil to fulfill the empty chambers, and close the register.	It is normal if the oil level lowers a little, that is because when raising the machine, one of the chamber's sides of the hydraulic cylinder was fulfilled (height indicator).	If the oil remains in the same level, check or replace the valve.

B - Check the nitrogen gas pressure

	Test point	Good result	Possible cause for poor reading
1	Check if there is nitrogen in the volume converter.	29 to 36 psi 200 to 250 kPa 2 to 2.5 bar	Internal repair for the volume converter. Replace the converter.

C - Test of power supply and sensor grounding

	Test point	Good reading	Possible cause for poor reading
1	With the ignition key turned ON in the first position (Post key). Disconnect the connector C-178 from the basecutter position sensor pin 3 (PK), page 15, and measure it.	12 Volts If the reading is good, go to the next test point.	Check the circuit between the connector C-178 and the SCM 1 module, connector 103 pin 11.
2	Disconnect the connector C-178 from the basecutter position sensor. Measure the resistance between the pin 2 (YE) and the SCM 1 module connector C-103 pin 28 (YE).	Less than 1 ohm. If the reading is good, the return circuits are OK, go to the next test point.	Check the circuit between the connector C-178 and the SCM 1 module, connector 103 pin 28.
3	Disconnect the connector C-178 from the basecutter. Check if there is grounding in the (pin BL).	If the reading is good, the power and ground circuits are OK.	Check the circuit between the basecutter connector (pin 1) and the ground (GND 03) located in the chassis' left side.

D - Check the sensor return circuit for the module (SCM1) / Sensor test

	Test point	Good reading	Possible cause for poor reading
1	With the ignition key turned ON in the first position. Measure the voltage that reaches the C-103 connector of the SCM 1 module (pin 28) page 15.	This reading must be the same that leaves the pin 2 of the sensor connector. If the reading is good, go to the test point 2.	Check the circuit between the C-103 connector of the SCM 1 module (pin 11) and the (pin 2) of the position sensor connector. If the circuit is OK, replace the sensor.
2	Check the reading shown in the display, to have this access follow the steps: Enter in the icon: Diagnosis >Diag>Harvester basic function>Basecutter height	If the reading is good, the circuit and the module are OK.	Replace the module SCM 1.

E - Test of the pressure sensor power supply and grounding

	Test point	Good reading	Possible cause for poor reading
1	With the ignition key turned ON in the first position (Post key). Disconnect the connector C-179 from the basecutter pressure sensor pin B (PK), page 15, and measure it.	12 Volts If the reading is good, go to the next test point.	Check the circuit between the connector C-179 and the SCM 1 module, connector 103 pin 11.
2	Disconnect the connector C-178 from the basecutter position sensor. Measure the resistance between the pin C (YE) and the module SCM 1 connector C-103 pin 33 (YE).	Less than 1 ohm. If the reading is good, the return circuit is OK, go to the next test point.	Check the circuit between the connector C-179 and the SCM 1 module, connector 103 pin 33.
3	Disconnect the connector C-178 from the basecutter. Check if there is grounding in pin A (BL).	If the reading is good, the power and ground circuits are OK.	Check the circuit between the basecutter connector (pin 1) and the ground (GND 03) located in the chassis' left side.

ELECTRONIC TRACKER ELECTRICAL CIRCUIT OPERATION

Description

The electronic traction is responsible by the harvest control, which consists of several electronic components, such as Joystick, maestro module, solenoids and sensors of the right pump and left pump.

The traction pump solenoids receive electrical signals generated in the maestro module.

Troubleshooting of the electrical circuit and the electronic traction calibration

Prior to troubleshooting the cylinder control electrical circuit, check if the operation conditions are followed:

A. The batteries are totally charged and all the connections are clean and tightened.

B. Check all connectors for the complete installation, loosened, corroded, removed or bent terminals.

C. Check the fuse F-038 and F-58

D. Check the possible error messages in the display.

If a failure message is shown in the display, the diagnosis can be performed in two ways:

- Clicking on option *Diagn* (Diagnosis) and follow the sequence, or in the main screen select the icon *Diagnosis* > *Diag* > and choose the option you want to obtain and follow with the sequence.

Procedures to detect the failures and the possible solutions

NOTE: *The pages mentioned below are from the electrical diagram.*

Symptom	Possible Cause	Reference / Test
Machine directing only to one side	Pump out of calibration	Perform the calibration: IF A8800 (Pump balance) IF A8000 (Steering solenoid)

BLOWER CONTROL CIRCUIT OPERATION

Description

The climate control is a system manually controlled to provide heat and air conditioning, which consists of the following functions:

- Operator's control of the blower (3 speeds).
- Operator's selection of A/C "ON" and A/C "OFF".
- Manual control of the heating valve and the compressor clutch.

The blower motor speed is controlled by a four-position switch ("OFF", "Low", "Medium", and "High"). The blower speed is controlled by a power supply resistor that determines the several voltage drops to supply different fan speeds.

The "OFF" position will also turn the A/C OFF, if it is ON.

AIR CONTROL CIRCUIT OPERATION
AIR CONDITIONING/HEATING

Description

The A/C control can be turned ON or OFF by the A/C switch, but there is no visual indication for the operation.

The hot air control is obtained by manually operating a valve assembled in the upper panel; the heating is reached by turning the valve to the hot position (red).

OPERATION OT THE A/C COMPRESSOR PROTECTION CIRCUIT

Description

The compressor is protected by the cooler high and low pressure switches. These switches will not allow the compressor's operation if the coolant pressure is above or below a pre-established limit.

Climate manual control system troubleshooting

Prior to troubleshooting the Climate Manual Control system, check if the operation conditions are followed:

A. The batteries are totally charged and all the connections are clean and tightened.

B. Check all connectors for the complete installation, loosened, corroded, removed or bent terminals.

C. Supply with the correct coolant.

D. The condenser warnings are clean and without any obstructions.

E. The compressor's operation belts must be properly tensioned and under good conditions.

Climate manual control system troubleshooting

NOTE: *The batteries must be totally charged and all the connections are clean and tightened. Use a multimeter for these tests. To test the battery and the services, see the battery section in the services manual.*

⚠ CAUTION ⚠

Do not use a test light with automatic power supply in any of these tests. The use of test lights with automatic power supply can cause damages in the components of this system.

Symptom	Possible Cause	Reference / Test
The climate control module is not working	Fuse F-019 Circuit	A - Power supply of the climate control module and power supply and grounding test.
	Climate control module	If the test A is OK, install a new climate control module.
The blower is not working (all the speed positions)	Climate control module	A - Power supply of the climate control module and power supply and grounding test.
	Fuses Circuit Blower Climate control module	B- Test of the blower circuit
The blower is not working (lower position)	Circuit Blower's low speed relay Climate control module	C - Test of the blower circuit (Low speed)

continued...

Symptom	Possible Cause	Reference / Test
The blower is not working (medium position)	Circuit Blower's medium speed relay Climate control module	D - Test of the blower circuit (Medium speed)
The blower is not working (high position)	Circuit Blower's high speed relay Climate control module	E - Test of the blower circuit (High speed)

Diagnostic test for the climate manual control system

A - Test of power supply for the climate control module and grounding

	Test point	Good reading	Possible cause for poor reading
1	Disconnect the climate control module connector C-028. Turn the ignition key ON. Check if there are 12 volts in the connector C-028 (pin 3).	12 volts If the reading is good, continue with the next step.	Fuse F-019 Check the circuit between the climate connector C-028 (pin 3) and the fuse F-019 (OR).
2	Turn the ignition key OFF. Check if there is ground in the climate control module connector C-028 (pin 3)	Resistance less than 1 ohm. If the reading is good, the climate control module wiring is OK.	Check the circuit in the cabin roof. Check the circuit between the climate control module connector C-028 (pin 13) and the ground, located in the cabin roof.

B- Test of the blower circuit

	Test point	Good reading	Possible cause for poor reading
1	Remove the blower low speed relay RLY-015. Turn the ignition key ON and check if there are 12 volts in the relay RLY-015 connector (pin 30).	12 volts If the reading is good, go to the next step.	Fuse F-057 Open circuit in the fuses printed circuit.
2	Disconnect the blower connector C-157. Check if there is ground in the connector C-157 (pin 3 and 4).	Resistance less than 1 ohm. If the reading is good, continue with the next step.	Check the circuit between the blower connector C-157 (pin 3 and 4) and the ground GND-002 behind the printed circuit board.
3	Reconnect the blower connector C-157. Turn the ignition key ON. Select the blower's switch low position Check if there is 12 volts in the relay RLY-015 connector (pin 86).	12 volts If the reading is good, continue with the next step.	Check the circuit between the blower connector C-028 (pin 5) and the relay RLY-015 connector (pin 86).
	Replace the relay.Check if there are 12 volts in the connector C-157 (pin 8).	12 volts If the reading is good, install a new blower.	Relay.

C - Test of the blower low speed circuit

	Test point	Good reading	Possible cause for poor reading
1	Remove the blower low speed relay RLY-015. Turn the ignition key ON and check if there are 12 volts in the relay RLY-015 connector (pin 30).	12 volts If the reading is good, go to the next step.	Fuse F-057 Open circuit in the fuses printed circuit.
2	Turn the ignition key OFF. Check if there is 12 volts in the relay RLY-015 connector (pin 85).	Resistance less than 1 ohm. If the reading is good, continue with the next step.	Check the circuit between the relay connector RLY-015 (pin 85) and the ground behind the printed circuit board.
3	Turn the ignition key ON. Select the blower's switch low position Check if there are 12 volts in the relay RLY-015 connector (pin 86).	12 volts If the reading is good, go to the test point 5.	Check the circuit.
4	Turn the ignition key OFF. Install the low speed relay RLY-015. Disconnect the blower connector C-157. Turn the ignition key ON. Measure the voltage in the connector C-157 (pin 8).	12 volts If the reading is good, install a new blower.	Blower's low speed relay RLY-015. Check the circuit between the relay connector RLY-015 (pin 87) and the blower connector C-157 (pin 8). Go to the next test point.
5	Turn the ignition key OFF. Remove the blower low speed relay RLY-015. Measure the resistance between the relay connector RLY-015 (pin 87) and the blower connector C-157 (pin 8).	Less than 1 ohm. If the reading is good, install a new blower low speed relay RLY-015.	Check the circuit between the blower low speed relay connector RLY-015 and the blower connector C-157 (pin 8).

D - Test of the blower medium speed circuit

	Test point	Good reading	Possible cause for poor reading
1	Remove the blower medium speed relay RLY-013. Turn the ignition key ON and check if there are 12 volts in the relay RLY-013 connector (pin 30).	12 volts If the reading is good, go to the next step.	Fuse F-057 Open circuit in the fuses printed circuit.
2	Turn the ignition key OFF. Check if there is 12 volts in the relay RLY-013 connector (pin 85).	Resistance less than 1 ohm. If the reading is good, continue with the next step.	Check the circuit between the relay connector RLY-013 (pin 85) and the ground behind the printed circuit board.
3	Turn the ignition key ON. Select the blower's switch medium position. Check if there are 12 volts in the relay RLY-013 connector (pin 86).	12 volts If the reading is good, go to the test point 5.	Check the circuit.
4	Turn the ignition key OFF. Install the medium speed relay RLY-013. Disconnect the blower connector C-157. Turn the ignition key ON. Measure the voltage in the connector C-157 (pin 6).	12 volts If the reading is good, install a new blower.	Blower's medium speed relay RLY-013. Check the circuit between the relay connector RLY-013 (pin 87) and the blower connector C-157 (pin 6). Go to the next test point.
5	Turn the ignition key OFF. Remove the blower medium speed relay RLY-013. Measure the resistance between the relay connector RLY-013 (pin 87) and the blower connector C-157 (pin 6).	Less than 1 ohm. If the reading is good, install a new blower low speed relay RLY-013.	Check the circuit between the blower low speed relay connector RLY-013 and the blower connector C-157 (pin 6).

E - Test of the blower high speed circuit

	Test point	Good reading	Possible cause for poor reading
1	Remove the blower high speed relay RLY-014. Turn the ignition key ON and check if there are 12 volts in the relay RLY-014 connector (pin 30).	12 volts If the reading is good, go to the next step.	Fuse F-057 Open circuit in the fuses printed circuit.
2	Turn the ignition key OFF. Check if there is 12 volts in the relay RLY-014 connector (pin 85).	Resistance less than 1 ohm. If the reading is good, continue with the next step.	Check the circuit between the relay connector RLY-014 (pin 85) and the ground behind the printed circuit board.
3	Turn the ignition key ON. Select the blower's switch high position. Check if there are 12 volts in the relay RLY-014 connector (pin 86).	12 volts If the reading is good, go to the test point 5.	Check the circuit.
4	Turn the ignition key OFF. Install the high speed relay RLY-014. Disconnect the blower connector C-157. Turn the ignition key ON. Measure the voltage in the connector C-157 (pin 12 and 14).	12 volts If the reading is good, install a new blower.	Blower's low high relay RLY-014. Check the circuit between the blower high speed relay connector RLY-014 (pin 87) and the blower connector C-157 (pin 12 and 14). Go to the next test point.
5	Turn the ignition key OFF. Remove the blower high speed relay RLY-014. Measure the resistance between the relay connector RLY-014 (pin 87) and the blower connector C-157 (pin 12).	Less than 1 ohm. If the reading is good, install a new blower high speed relay RLY-014.	Check the circuit between the blower high speed relay connector RLY-014 and the blower connector C-157 (pin 12 and 14).

INTERIOR LIGHTING CIRCUIT OPERATION

Description

The interior lighting consists of a ceiling lamp switchable with the left door switch. The ceiling lamp has a switch that can be switched to the OFF, ceiling or door position.

When the ceiling lamp switch is in the door position, the lamp will light when the left door is open. The continuous current is supplied to the ceiling lamp so that it can be operated at any time by setting the ceiling lamp switch in the ceiling position.

The ceiling lamp switch can be set in the OFF position, thus the ceiling lamp will not light, even when the door is opened.

Interior lighting system circuit troubleshooting

Prior to troubleshooting the interior lighting system, check if the operation conditions are followed:

A. The batteries are totally charged and all the connections are clean and tightened.

B. Check all connectors for the complete installation, loosened, corroded, removed or bent terminals.

C. The fuse F-039 is OK.

Table of symptoms of the interior lighting system

NOTE: *The batteries must be totally charged and all the connections are clean and tightened. Use a multimeter for these tests.*

⚠ CAUTION ⚠

Do not use a test light with automatic power supply in any of these tests. The use of test lights with automatic power supply can cause damages in the components of this system.

Interior ceiling lamp

Symptom	Possible Cause	Reference / Test
The interior ceiling lamp does not work.	Fuse F-039 Interior ceiling lamp circuits	A- Test of Power supply and ground for the interior ceiling lamp. If the test A is OK, install a new interior ceiling lamp.
The interior ceiling lamp works when it is turned on, but not when the door is opened.	Door switch Fuses Circuits	B - Test the door switch.
The interior ceiling lamp works with when the door is opened, but not when it is turned on.	Interior ceiling lamp ground circuit	C - Test of Power supply and ground for the interior ceiling lamp.
	Interior ceiling lamp	If the test A is OK, install a new interior ceiling lamp.

Diagnostic test for the interior lighting system circuit

A - Test of power supply and ground for the interior ceiling lamp

	Test point	Good reading	Possible cause for poor reading
1	Disconnect the interior ceiling lamp connector C-121 (pin 1) RD. Check if there are 12 volts in the connector C-121 (pin 1) RD.	12 volts If the reading is good, go to the test point 3.	Fuse F-039 Open circuit in the fuses printed circuit.
2	Disconnect the connector C-407 (pin 21) RD. Measure the resistance between the interior ceiling lamp C-121 (pin 1) RD and the connector C-407 (pin 21) RD.	Resistance less than 1 ohm. If the reading is good and the fuse F-039 is OK, install a new printed circuit.	Check the circuit between the interior ceiling lamp connector C-121 (pin 1) RD and the connector.
3	Disconnect the interior ceiling lamp connector C-121 (pin 1) BK. Check if there is ground in the interior ceiling lamp connector C-121 (pin 1) BK.	Less than 1 ohm. If the reading is good, the power and ground circuits are OK.	Check the circuit between the interior ceiling lamp connector C-122 (pin 1) and the mass GND-022 in the cabin roof

B - Test of the door switch circuit

	Test point	Good result	Possible cause for poor reading
1	Disconnect the interior ceiling lamp connector C-123 (pin 1) BL. Open the cabin door. Check if there is ground in the interior ceiling lamp connector C-123 (pin 1) BL.	Less than 1 ohm. If the reading is good, install a new interior ceiling lamp.	Door switch. Check the circuit between the connector C-123 (pin 1) BL and the door switch connector C-048 (pin 1). Go to the next test point.

WIPER / WASHER SYSTEM CIRCUIT OPERATION

Description

The wiper/washer system consists of a two-speed motor and a separate washer motor and reservoir.

Power to the system is supplied, and it will work in continuous or fixed speed interval.

Wiper/washer system circuit troubleshooting

Prior to troubleshooting the Climate Manual Control system, check if the operation conditions are followed:

A. The batteries are totally charged and all the connections are clean and tightened.

B. Check all connectors for the complete installation, loosened, corroded, removed or bent terminals.

C. Check fuse F-021

Procedures to detect the failures and the possible solutions

Symptom	Possible Cause	Reference / Test
The wiper motor does not work	Fuse F-021 Wiper motor circuits	A - Circuit test for the wiper motor.
	Wiper switch	B - Component test for the wiper switch.
	Wiper motor	If the test C is OK, install a new wiper motor.
The wiper motor is only working in low speed	Wiper switch.	B - Switch test for the wiper switch.
	Wiper motor circuits.	C - Circuit test for the wiper motor.
The wiper motor is only working in high speed	Wiper switch.	B - Switch test for the wiper switch.
	Wiper motor circuits.	C - Circuit test for the wiper motor.
Windshield washer does not work	Low level of fluid in the washer. Obstruction in the washer lines.	Check the reservoir and the liquids line.
	Washer switch. Circuits	D - Test the washer motor and switch.
	Washer pump	If the test D is OK, install a new washer motor.

Diagnostic test for the wiper/washer system circuit

A - Circuit test for the wiper motor

	Test point	Good reading	Possible cause for poor reading
1	Turn the ignition key ON. Put the switch in the position **OFF**. Check if there are 12 volts in the wiper motor connector C-155 (pin 5).	12 volts If the reading is good, go to the next step.	Open the circuit between the wiper switch connector (pin 2B) and the printed circuit board connector C-410 (pin 12), OR. Open the circuit between the wiper switch connector (pin 4) and the wiper motor connector (pin 5).
2	Put the wiper switch in the **Intermittent** position. Check if there are 12 volts in the wiper motor connector C-155 (pin 4) and (pin 5).	12 volts If the reading is good, continue with the next step.	Open the circuit between the wiper switch connector (pin 2B) and the printed circuit board connector C-410 (pin 12), OR. Open the circuit between the wiper switch connector (pin 4) and the wiper motor connector (pin 4) and (pin 5).
3	Put the wiper motor switch in the position **ON** (continuous). Check if there are 12 volts in the wiper motor connector C-155 (pin 4) and (pin 3), WH.	12 volts If the reading is good, continue with the next step.	Open the circuit between the wiper switch connector C-045 (pin 3) and (pin 6) and the wiper motor connector C-155 (pin 4) and (pin 3).
4	Turn the ignition key OFF. Check if there is ground in the wiper motor connector C-155 (pin 1).	Less than 1 ohm. If the reading is good, the wiper motor circuits are OK.	Check the circuit between the wiper switch connector C-155 (pin 1) and the mass GND-022 in the cabin roof.

B - Component test for the wiper switch

	Test point	Good reading	Possible cause for poor reading
1	Turn the wiper switch connector **OFF**. Put the wiper switch in the **OFF** position. Measure between the wiper switch connector component side (pin 2B and 4).	Less than 1 ohm. If the reading is good, continue with the next step.	Wiper switch.
2	Measure between the wiper switch connector component side (pin 2B and 3) and (pin 2B and 6).	Open the circuit. If the reading is good, continue with the next step.	Wiper switch.
3	Put the wiper switch in the **Intermittent** position. Measure between the wiper switch connector component side (pin 2B and 3) and (pin 2B and 4).	Less than 1 ohm. If the reading is good, continue with the next step.	Wiper switch.
4	Put the wiper switch in the position **ON** (continuous). Measure between the wiper switch connector component side (pin 2B and 3) and (pin 2B and 6).	Less than 1 ohm. If the reading is good, continue with the next step.	Wiper switch.
5	Measure between the wiper switch connector component side (pin 2B and 4).	Open the circuit. If the reading is good, the wiper switch is OK.	Wiper switch.

C - Circuit test for the wiper motor

	Test point	Good reading	Possible cause for poor reading
1	Turn the wiper switch connector **OFF**. Put the wiper switch in the **OFF** position. Measure between the wiper switch connector component side (pin 2B and 4).	Less than 1 ohm. If the reading is good, continue with the next step.	Wiper switch.
2	Measure between the wiper switch connector component side (pin 2B and 3) and (pin 2B and 6).	Open the circuit. If the reading is good, continue with the next step.	Wiper switch.
3	Put the wiper switch in the **Intermittent** position. Measure between the wiper switch connector component side (pin 2B and 3) and (pin 2B and 4).	Less than 1 ohm. If the reading is good, continue with the next step.	Wiper switch.
4	Put the wiper switch in the position **ON** (continuous). Measure between the wiper switch connector component side (pin 2B and 3) and (pin 2B and 6).	Less than 1 ohm. If the reading is good, continue with the next step.	Wiper switch.
5	Measure between the wiper switch connector component side (pin 2B and 4).	Open the circuit. If the reading is good, the wiper switch is OK.	Wiper switch.

CYLINDER CONTROL ELECTRICAL CIRCUIT OPERATION

Description

The cylinder control is responsible for the following functions in the harvester:

- Elevator slew to right / left
- Primary extractor hood slew to right / left
- Left cropdivider up and down
- Right cropdivider up and down
- Topper arm up and down
- Basecutter (suspension) up and down

The cylinders control solenoids receive electrical signals generated in the SCM1 and SCM2 module.

Cylinders control electrical circuit troubleshooting

Prior to troubleshooting the cylinder control electrical circuit, check if the operation conditions are followed:

A. The batteries are totally charged and all the connections are clean and tightened.

B. Check all connectors for the complete installation, loosened, corroded, removed or bent terminals.

C. Check fuses F-051, F-008, F-016, F-017, and F054

D. Check the possible error messages in the display.

If a failure message is shown in the display, the diagnosis can be performed in two ways:

- Clicking on option *Diagn* (Diagnosis) and follow the sequence, or in the main screen select the icon *Diagnosis* > *Diag* > and choose the option you want to obtain and follow with the sequence.

Example: The elevator slew does not work to the right side, follow the steps below:

1. Enter in the main screen;
2. Click on the *Diagnosis* menu
3. In the screen right side, several icons in the *Diag* option will be displayed;
4. Click on the *Elevator* menu, and look for the desired option *Right elevator slew* and press *Enter*;
5. A box will be open in the middle of the screen with the option *Diagnosis*;
6. With this, you can know if the modules are communicating and sending signals to the proper systems. If the problem remains, continue with the procedures and checking below.

Procedures to detect the failures and the possible solutions

NOTE: *The pages mentioned below are from the electrical diagram.*

Symptom	Possible Cause	Reference / Test
Elevator slew does not work to **right / left** side	Fuse F-051 Switch (slew pedal)	Check if there is an error message in the display
	Module SCM 2 Elevator slew circuits	Test the elevator slew circuit, page 6, 16, and 18.
	Solenoid 12 volts 39W	Test the solenoid resistance 3.8 Ω
	Pilot valve	Test the pilot valve power supply fuse, page 5. Test the pilot valve circuit, page 16 Check if the pilot valve spool is locked.
Primary extractor hood slew does not work to the **right / left** side	Fuse F-054 Switch	Check if there is an error message in the display
	Module SCM 1 Primary extractor hood slew circuits	Test the primary extractor hood slew circuit, page 5 and page 16
	Solenoid 12 volts 30W	Test the solenoid resistance 5 Ω
	Pilot valve	Test the pilot valve power supply fuse, page 5. Test the pilot valve circuit, page 16 Check if the pilot valve spool is locked.
Left cropdivider up and down does not work	Fuse F-017 Switch	Check if there is an error message in the display
	Module SCM 1 Left cropdivider circuits	Test of the left cropdivider circuit, page 5 and page 16
	Solenoid 12 volts 30W	Test the solenoid resistance 5 Ω
	Pilot valvePilot valve locked	Test the pilot valve circuit, page 16

continued...

Symptom	Possible Cause	Reference / Test
Right cropdivider up and down does not work	Fuse F-017 Switch	Check if there is an error message in the display
	Module SCM 1 Right cropdivider circuits	Test of the right cropdivider circuit, page 5 and page 16
	Solenoid 12 volts 30W	Test the solenoid resistance 5 Ω
	Pilot valvePilot valve locked	Test the pilot valve circuit, page 16
Topper arm up and down does not work	Fuse F-016 Switch	Check if there is an error message in the display
	Module SCM 1 Topper arm circuits	Test the topper arm up and down circuit, page 5 and page 16
	Solenoid 12 volts 39W	Test the solenoid resistance 3.8 Ω
	Pilot valvePilot valve locked	Test the pilot valve circuit, page 16
Basecutter up and down (suspension) does not work	Fuse F-016 Switch	Check if there is an error message in the display
	Module SCM 1 Suspension circuits	Test the basecutter up and down (suspension) circuit, page 5 and page 16
	Solenoid 12 volts 3,5 Amperes	Test the solenoid resistance 1.55 Ω
	Pilot valve Pilot valve locked	Test the pilot valve circuit, page 16

CYLINDER AUXILIARY BLOCK ELECTRICAL CIRCUIT OPERATION

Description

The cylinder auxiliary block is responsible for controling the following harvester functions:

- Knock down roller in / out
- Cropdivider tilt in / out, right side
- Cropdivider tilt in/ out, left side
- Side trim knife extend / retract, right side
- Side trim knife extend / retract, left side

The auxiliary block solenoids receive the electrical signals generated in the module SCM 3.

Cylinders auxiliary block electrical circuit troubleshooting

Prior to troubleshooting the cylinder control electrical circuit, check if the operation conditions are followed:

A. The batteries are totally charged and all the connections are clean and tightened.

B. Check all connectors for the complete installation, loosened, corroded, removed or bent terminals.

C. Check fuse F-005, F-027, and F-026.

D. Check the possible error messages in the display.

If a failure message is shown in the display, the diagnosis can be performed in two ways:

- Clicking on option *Diagn* (Diagnosis) and follow the sequence, or in the main screen select the icon *Diagnosis* > *Diag* > and choose the option you want to obtain and follow with the sequence.

Procedures to detect the failures and the possible solutions

NOTE: *The pages mentioned below are from the electrical diagram.*

Symptom	Possible Cause	Reference / Test
Knock down roller **in / out** does not work	Fuse F-005 Switch	Check if there is an error message in the display
	Module SCM 3	Test the knock down roller circuit, page 7, page 17
	Knock down roller circuits	Test the solenoid resistance 5 Ω
	Solenoid 12 volts 30W Pilot valveValve locked	Test the pilot valve circuit, page 16

continued...

Symptom	Possible Cause	Reference / Test
Cropdivider tilt **in / out**, right side does not work	Fuse F-027 Switch	Check if there is an error message in the display
	Module SCM 3 Tilting cropdivider circuits to the right side	Test the tilting cropdivider circuit, page 7, page 17
	Solenoid 12 volts 30W	Test the solenoid resistance 5 Ω
	Pilot valve Pilot valve locked	Test the pilot valve circuit, page 16
Cropdivider tilt **in / out**, left side does not work	Fuse F-027 Switch	Check if there is an error message in the display
	Module SCM 3 Left cropdivider circuits	Test the tilting cropdivider circuit, page 7, page 17
	Solenoid 12 volts 30W	Test the solenoid resistance 5 Ω
	Pilot valve Pilot valve locked	Test the pilot valve circuit, page 16
Side trim knife extend/ retract, right side does not work to **extend / retract**	Fuse F-026 Switch	Check if there is an error message in the display
	Module SCM 3 Side trim knife circuit, right side	Test the side trim knife circuit, page 7, page 17
	Solenoid 12 volts 30W	Test the solenoid resistance 5 Ω
	Pilot valve Pilot valve locked	Test the pilot valve circuit, page 16
Side trim knife extend/ retract, left side does not work to **extend / retract**	Fuse F-026 Switch	Check if there is an error message in the display
	Module SCM 3 Side trim knife circuit, left side	Test the side trim knife circuit, page 7, page 17
	Solenoid 12 volts 30W	Test the solenoid resistance 5 Ω
	Pilot valve Pilot valve locked	Test the pilot valve circuit, page 16

BASECUTTER BLOCK ELECTRICAL CIRCUIT OPERATION

Description

The basecutter block is responsible for controling the following harvester function:

- Basecutter and chopper rotation (implements)

The basecutter block solenoids receive the electrical signals generated in the module SCM 2.

Basecutter block electrical circuit troubleshooting

Prior to troubleshooting the cylinder control electrical circuit, check if the operation conditions are followed:

A. The batteries are totally charged and all the connections are clean and tightened.

B. Check all connectors for the complete installation, loosened, corroded, removed or bent terminals.

C. Check fuse F-043

D. Check the possible error messages in the display.

If a failure message is shown in the display, the diagnosis can be performed in two ways:

- Clicking on option *Diagn* (Diagnosis) and follow the sequence, or in the main screen select the icon *Diagnosis* > *Diag* > and choose the option you want to obtain and follow with the sequence.

Procedures to detect the failures and the possible solutions

NOTE: *The pages mentioned below are from the electrical diagram.*

Symptom	Possible Cause	Reference / Test
Basecutter and chopper do not function	Fuse F-043 Switch	Check if there is an error message in the display
	Module SCM 2 Basecutter and chopper circuits, harvest and reverse direction	Test the basecutter circuit, page 6, page 18
	Solenoid 12 volts 30W	Test the solenoid resistance 5 Ω

SIDE TRIM KNIFE BLOCK ELECTRICAL CIRCUIT OPERATION

Description

The basecutter block is responsible for controling the following harvester functions:

- Side trim slew, left side (forward/reverse)
- Side trim slew, right side (forward/reverse)

The side trim knife block solenoids receive the electrical signals generated in the module SCM 3.

Side trim knife block electrical circuit troubleshooting

Prior to troubleshooting the cylinder control electrical circuit, check if the operation conditions are followed:

A. The batteries are totally charged and all the connections are clean and tightened.

B. Check all connectors for the complete installation, loosened, corroded, removed or bent terminals.

C. Check fuse F-025

D. Check the possible error messages in the display.

If a failure message is shown in the display, the diagnosis can be performed in two ways:

- Clicking on option *Diagn* (Diagnosis) and follow the sequence, or in the main screen select the icon *Diagnosis* > *Diag* > and choose the option you want to obtain and follow with the sequence.

Procedures to detect the failures and the possible solutions

NOTE: *The pages mentioned below are from the electrical diagram.*

Symptom	Possible Cause	Reference / Test
Side trim cut slew left / right do not work (forward/reverse)	Fuse F-025 Switch	Check if there is an error message in the display
	Module SCM 3 Side trim cut slew circuits	Test the side trim knife slew circuit, page 7, page 18
	Solenoid 12 volts 38W	Test the solenoid resistance

SECTION - ELECTRIC SYSTEMS

Chapter 6 - Troubleshooting

CONTENTS

Section	Description	Page
06	Faults and Alarms Codes	3
	Troubleshooting of FAULTS	4
	Troubleshooting of ALARMS	55
	Table of codes and description of failure severity	60

Faults ans Alarms Codes

Introduction

When a malfunction or situation recognized by the system as out of specification on A8000 Series Sugar Cane Harvester, the machine warns the operator through a message displayed on the monitor screen.

This message is composed of a description and a code of the occurred problem.

Details of the codes

The codes are formed by a letter (**A** or **E**) and 6 digits, where the first 4 digits represent a sequence.

With the table below you can check a few points of analysis in troubleshooting the failure. The last 2 digits represent the severity of the failure.

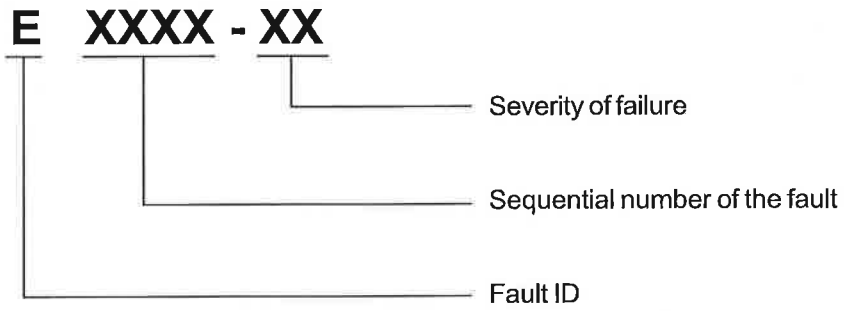

Fault codes beginning with the letter **E** mean that faults are permanent and will only disappear from the monitor when the problem related to it is repaired.

Fault codes beginning with the letter **A** are momentary warnings, i.e., messages to the operator that something is wrong with the machine.

NOTE: *On the tables of following pages, to locate the connectors you should use the pages of the wiring diagrams in Chapter 5 of Section 4 - Electrical System in this manual.*

For tests through the monitor, readings should be:

- *For switch and sensor tests the operator should read the voltage and to analyze the value displayed should enter the INFO tab in the pop-up Diagnostics.*
- *For testing cetop/coil the diagnostic result will be the status if OK or not OK.*

Troubleshooting of FAULTS

Fault Code	Module	SCM that uses	Code Description	1st Diagnostics	Possible causes	What to do	Page on Wiring Diagram
E0000	SCM1	1	Battery voltage SCM1	Select on monitor: 1 - Diagnostics 2 - Guide Diag. 3 - SCM1 4 - SCM1 Battery supply	Poles oxidation	Check if it has oxidation on the poles and remove the oxidation.	1 and 2
					Electrolyte low level	Check the electrolyte level, if it is below the mark, complete with DESTILATED WATER.	
					Lost the capacity of maintain the charge.	Check if the electrolyte is translucid, if it is cloudy replace the battery.	
E0001	SCM1	1	Key voltage SCM1	Select on monitor: 1 - Diagnostics 2 - Guide Diag. 3 - SCM1 4 - SCM1 key supply	Fuse burned out	Replace the fuse	2
					Relay 19 burned out	Replace the relay	
					Harness connector with bad contact	Check if the connector is properly fitted	
					Cables rupture	Check continuity	
E0002	SCM1	1	Reference voltage SCM1 8V	Select on the monitor: 1 - Diagnostics 2 - Tab Diag. 3 - SCM1 4 - SCM2 8V ref	Module internal fault	Contact the manufacturer	5
E0003	SCM1	1	Reference voltage 1 SCM1 5V	Select on the monitor: 1 - Diagnostics 2 - Tab Diag. 3 - SCM1 4 - SCM2 5V ref1	Module internal fault	Contact the manufacturer	5
E0004	SCM1	1	Reference voltage 2 SCM1 5V	Select on the monitor: 1 - Diagnostics 2 - Tab Diag. 3 - SCM1 4 - SCM15V ref2	Module internal fault	Contact the manufacturer	5
E0005	SCM1	1	Feedback voltage SCM 1	Select on the monitor: 1 - Diagnostics 2 - Tab Diag. 3 - SCM1 4 - Feedback sensor SCM1	Relay 6	Replace the relay	2
					Harness connector with bad contact	Check if the connector is properly fitted	
					Harness connector faulty	Check if the signal is passing through the harness connector.	
					Cables rupture	Check the continuity	
E0006	SCM1	1	Key supply		Harness connector with bad contact	Check if the connector is properly fitted	2
					Harness connector faulty	Check if the signal is passing through the harness connector.	
					Cables rupture	Check the continuity	

Troubleshooting of FAULTS (continued)

Fault Code	Module	SCM that uses	Code Description	1st Diagnostics	Possible causes	What to do	Page on Wiring Diagram
E0007	SCM1	1	Seat switch	Select on the monitor: 1 - Diagnostics 2 - Tab Diag. 3 - Cabine 4 - Seat switch	Sensor without charge	Check if there is electric feeding getting to the sensor.	15
					Harness connector faulty	Check if is passing signal through the sensor connector with harness.	
					Sensor damaged	Check the continuity between the sensor and the module.	
E0008	SCM1	1	Hazard switch	Select on the monitor: 1 - Diagnostics 2 - Tab Diag. 3 - Cabine 4 - Hazard switch	Fuse burned out	Check the fuse	2
					Harness connector with bad contact	Check if the connector is properly fitted	
					Harness connector faulty	Check if the signal is passing through the harness connector.	
					Cables rupture	Check continuity	
					Diode burned out	Replace D004 e D005 diodes.	
					Relay burned out	Check the relays	
E0009	SCM1	1	Road Lights state	Select on the monitor: 1 - Diagnostics 2 - Tab Diag. 3 - Cabine 4 - Road Light Switch	Fuse burned out	Check the fuse	12
					Harness connector with bad contact	Check if the connector is properly fitted	
					Harness connector faulty	Check if the signal is passing through the harness connector.	
					Cables rupture	Check continuity	
					Diode burned out	Replace 001 diode.	
E0016 Only for machines with engine SCANIA DC9	SCM1	1	Water in the fuel	-	Excess of water at decantation tank.	Drain the water	1 and 13
					Sensor not sending signal to the module.	Check the continuity between the sensor and the module.	
					Sensor without charge	Check if there is electric feeding getting to the sensor	
					Harness connector faulty	Check if signal is passing through the sensor connector to harness.	
E0017	SCM1	1	Basecutter height	Select on the monitor: 1 - Diagnostics 2 - Tab Diag. 3 - Basic Harvester Functions 4 - Basecutter height	Sensor without charge	Check if the voltage at the position sensor is 5 V. If not, check the harness.	15
					Sensor not sending signal to the module.	Check the continuity of the sensor through the module, if it is not ok, check the harness.	
					Cables rupture	Check continuity	
					Ground wire problem	Check ground continuity	
					Sensor damaged	Replace the sensor	
					Harness connector faulty	Check if the signal is passing through the harness connector.	

Troubleshooting of FAULTS (continued)

Fault Code	Module	SCM that uses	Code Description	1st Diagnostics	Possible causes	What to do	Page on Wiring Diagram
E0021	SCM1	1	Basecutter pressure	Select on the monitor: 1 - Diagnostics 2 - Tab Diag. 3 - Basic Harvester Functions 4 - Basecutter pressure	Sensor without charge	Check if the voltage at the position sensor is 5 V. If not, check the harness.	15
					Sensor not sending signal to the module.	Check the continuity of the sensor through the module, if it is not ok, check the harness.	
					Cables rupture	Check continuity	
					Ground wire problem	Check ground continuity	
					Sensor damaged	Replace the sensor	
					Harness connector faulty	Check if is passing signal through the sensor connector with harness.	
E0036	SCM1	1	Left brake pedal		Short circuit	Check if there is electric feeding getting to the sensor	15
					Lack of continuity	Mesaure the continuity between the pedal connector and the module 1.	
					Harness connector faulty	Check if it is passing signal through the pedal connector and the harness.	
E0037	SCM1	1	Right brake pedal		Short circuit	Check if there is electric feeding getting to the sensor	15
					Lack of continuity	Measure the continuity between the pedal connector and the module 1.	
					Harness connector faulty	Check if it is passing signal through the pedal connector and the harness.	
E0038	SCM1	1	Fuel tank level	Select on the monitor: 1 - Diagnostics 2 - Tab Diag. 3 - Power 4 - Fuel Tank Level	Ground wire problem	Check ground continuity	13
					Lack of comunication	Check the continuity of the comunication wire of the sensor through the module.	
					Harness connector faulty	Check if is passing signal through the sensor connector with harness.	
					Sensor damaged	Replace the sensor	
E0041	SCM1	1	Basecutter up / down Cetop current	Select on the monitor: 1 - Diagnostics 2 - Tab Diag. 3 - Basic Harvester Functions 4 - Basecutter up/dn current	Harness connector with bad contact	Check if the connector is properly fitted	16
					Harness connector faulty	Check if it is passing signal through the harness connector.	
					Ground wire problem	Check the continuity between the module clean ground wire and the PWM.	
					Coil burned out	Replace the coil.	
E0045	SCM1	1	Safety on the road Relay	Select on the monitor: 1 - Diagnostics 2 - Tab Diag. 3 - General 4 - Safety on the road Relay	Fuse burned out	Check F-001 e F-002 fuses	10
					Lack of module feeding	Check the continuity between the module and connector in the fuse plate	
					Relay burned out	Replace the relay	

Troubleshooting of FAULTS (continued)

Fault Code	Module	SCM that uses	Code Description	1st Diagnostics	Possible causes	What to do	Page on Wiring Diagram
E0046	SCM1	1	Right backlighting		Lack of continuity	Check the harness continuity	15 and 12
					Harness connector with bad contact	Check the connectors	
					Lamp burned out	Substitute the lamp	
E0047	SCM1	1	Brake Lights Relay	Select on the monitor: 1 - Diagnostics 2 - Tab Diag. 3 - General 4 - Brake Lights Relay	Connector C409 faulty	Check if it is passing signal through the harness connector.	13
					Lack of continuity	Check the harness continuity	
					Lack of battery feeding on the relay	Check F-0010 fuse	
					Relay burned out	Replace the relay	
E0052	SCM1	1	Trailler container / Topper articulation		Lack of continuity	Check the harness continuity	16
					Harness connector with bad contact	Check if the connector is properly fitted	
					Harness connector faulty	Check if it is passing signal through the harness connector.	
					Ground wire problem	Check ground continuity	
					Coil burned out	Replace the coil.	
E0053	SCM1	1	Pilot Valve 1	Select on the monitor: 1 - Diagnostics 2 - Tab Diag. 3 - Pilot 4 - Pilot valve 1	Lack of comunication	Check the continuity of the connector C006 to the socket connector that goes on the coil.	16
					Ground wire problem	Check ground continuity	
					The lock that holds the terminal on the connector is broken.	Open the connector and check if the connector lock is not broken.	
					Open circuit	Check the mounting conditions of the socket connector to the harness.	
					Ground wire problem	Check ground continuity	
					Coil burned out	Replace the coil.	
E0054	SCM1	1	Pilot Valve 2	Select on the monitor: 1 - Diagnostics 2 - Tab Diag. 3 - Pilot 4 - Pilot valve 2	Comunication flaw	Check the continuity of the connector C006 with the connector of the plug that goes at the coil.	16
					The lock that holds the terminal on the connector is broken.	Open the connector and check if the connector lock is not broken.	
					Ground wire problem	Check ground continuity	
					Open circuit	Check the mounting conditions of the socket connector to the harness.	
					Ground wire problem	Check ground continuity	
					Coil burned out	Replace the coil.	

Troubleshooting of FAULTS (continued)

Fault Code	Module	SCM that uses	Code Description	1st Diagnostics	Possible causes	What to do	Page on Wiring Diagram
E0055	SCM1	1	Topper Up	Select on the monitor: 1 - Diagnostics 2 - Tab Diag. 3 - Topper 4 - Topper Up	Lack of feeding	With the multifunctional handle Button actioned it must get electric feeding on the cetop.	16
					Lack of continuity	Measure the continuity between the C006 connector and the cetop.	
					The lock that holds the terminal on the connector is broken.	Open the connector and check if the connector lock is not broken.	
					Open circuit	Check if there is passing signal through the connectors ultil gets on the cetop.	
					Ground wire problem	Check ground continuity	
					Coil burned out	Replace the coil.	
E0056	SCM1	1	Topper Down	Select on the monitor: 1 - Diagnostics 2 - Tab Diag. 3 - Topper 4 - Topper Down	Lack of feeding	With the multifunctional handle Button actioned it must get electric feeding on the cetop.	16
					The lock that holds the terminal on the connector is broken	Open the connector and check if the connector lock is not broken.	
					Lack of continuity	Measure the continuity between the connector C006 and the cetop.	
					Open circuit	Check if there is passing signal through the connectors ultil gets on the cetop.	
					Ground wire problem	Check ground continuity	
					Coil burned out	Replace the coil.	
E0057	SCM1	1	Basecutter Down	Select on the monitor: 1 - Diagnostics 2 - Tab Diag. 3 - Basic Harvester Functions 4 - Basecutter Down	Harness connector with bad contact	Check if the connector is properly fitted	16
					The lock that holds the terminal on the connector is broken	Open the connector and check if the connector lock is not broken.	
					Harness connector faulty	Check if it is passing signal through the harness connector.	
					Ground wire problem	Check ground continuity	
					Coil burned out	Replace the coil.	
E0058	SCM1	1	Basecutter Up	Select on the monitor: 1 - Diagnostics 2 - Tab Diag. 3 - Basic Harvester Functions 4 - Basecutter Up	Harness connector with bad contact	Check if the connector is properly fitted	16
					The lock that holds the terminal on the connector is broken	Open the connector and check if the connector lock is not broken.	
					Harness connector fault	Check if it is passing signal through the harness connector.	
					Ground wire problem	Check ground continuity	
					Coil burned out	Replace the coil.	

Troubleshooting of FAULTS (continued)

Fault Code	Module	SCM that uses	Code Description	1st Diagnostics	Possible causes	What to do	Page on Wiring Diagram
E0062	SCM1	1	Topper Throw Direction Left	Select on the monitor: 1 - Diagnostics 2 - Tab Diag. 3 - Topper 4 - Topper Throw Direction Left	Harness connector with bad contact	Check if the connector is properly fitted	18
					Harness connector fault	Check if it is passing signal through the harness connector.	
					The lock that holds the terminal on the connector is broken	Open the connector and check if the connector lock is not broken.	
					Cables rupture	Check continuity	
					Ground wire problem	Check ground continuity	
					Coil burned out	Replace the coil.	
E0063	SCM1	1	Topper Throw Direction Right	Select on the monitor: 1 - Diagnostics 2 - Tab Diag. 3 - Topper 4 - Topper Throw Direction Right	Harness connector with bad contact	Check if the connector is properly fitted	18
					The lock that holds the terminal on the connector is broken	Open the connector and check if the connector lock is not broken.	
					Harness connector fault	Check if it is passing signal through the harness connector.	
					Cables rupture	Check continuity	
					Ground wire problem	Check ground continuity	
					Coil burned out	Replace the coil.	
E0065	SCM1	1	Cropdivider Left Up	Select on the monitor: 1 - Diagnostics 2 - Tab Diag. 3 - Basic Harvester Functions 4 - Cropdivider Left Up	Harness connector with bad contact	Check if the connector is properly fitted	16
					Harness connector fault	Check if it is passing signal through the harness connector.	
					The lock that holds the terminal on the connector is broken	Open the connector and check if the connector lock is not broken.	
					Cables rupture	Check continuity	
					Ground wire problem	Check ground continuity	
					Coil burned out	Replace the coil.	
E0066	SCM1	1	Cropdivider Left Down	Select on the monitor: 1 - Diagnostics 2 - Tab Diag. 3 - Basic Harvester Functions 4 - Cropdivider Left Down	Harness connector with bad contact	Check if the connector is properly fitted	16
					The lock that holds the terminal on the connector is broken	Open the connector and check if the connector lock is not broken.	
					Harness connector fault	Check if it is passing signal through the harness connector.	
					Cables rupture	Check continuity	
					Ground wire problem	Check ground continuity	
					Coil burned out	Replace the coil.	

Troubleshooting of FAULTS (continued)

Fault Code	Module	SCM that uses	Code Description	1st Diagnostics	Possible causes	What to do	Page on Wiring Diagram
E0067	SCM1	1	Cropdivider Right Up	Select on the monitor: 1 - Diagnostics 2 - Tab Diag. 3 - Função básicas de colheita 4 - Levantar corte de base Elevar Divisor de linha direito	Harness connector with bad contact	Check if the connector is properly fitted	16
					The lock that holds the terminal on the connector is broken	Open the connector and check if the connector lock is not broken.	
					Harness connector fault	Check if it is passing signal through the harness connector.	
					Cables rupture	Check continuity	
					Ground wire problem	Check ground continuity	
					Coil burned out	Replace the coil.	
E0068	SCM1	1	Cropdivider Right Down	Select on the monitor: 1 - Diagnostics 2 - Tab Diag. 3 - Função básicas de colheita 4 - Abaixar corte de base Elevar Divisor de linha direito.	Harness connector with bad contact	Check if the connector is properly fitted	16
					The lock that holds the terminal on the connector is broken	Open the connector and check if the connector lock is not broken.	
					Harness connector fault	Check if it is passing signal through the harness connector.	
					Cables rupture	Check continuity	
					Ground wire problem	Check ground continuity	
					Coil burned out	Replace the coil.	
E0073	SCM1	1	Primary Extractor Hood Slew Left	Select on the monitor: 1 - Diagnostics 2 - Tab Diag. 3 - Primary Extractor 4 - Primary Extractor Hood Slew Left	Harness connector with bad contact	Check if the connector is properly fitted	16
					Harness connector fault	Check if it is passing signal through the harness connector.	
					The lock that holds the terminal on the connector is broken	Open the connector and check if the connector lock is not broken.	
					Cables rupture	Check continuity	
					Ground wire problem	Check ground continuity	
					Coil burned out	Replace the coil.	
E0074	SCM1	1	Primary Extractor Hood Slew Right	Select on the monitor: 1 - Diagnostics 2 - Tab Diag. 3 - Primary Extractor 4 - Primary Extractor Hood Slew Right	Harness connector with bad contact	Check if the connector is properly fitted	16
					Harness connector fault	Check if it is passing signal through the harness connector.	
					The lock that holds the terminal on the connector is broken	Open the connector and check if the connector lock is not broken.	
					Cables rupture	Check continuity	
					Ground wire problem	Check ground continuity	
					Coil burned out	Replace the coil.	

Troubleshooting of FAULTS (continued)

Fault Code	Module	SCM that uses	Code Description	1st Diagnostics	Possible causes	What to do	Page on Wiring Diagram
E0077	SCM1	1	Flasher Lights Left	Select on the monitor: 1 - Diagnostics 2 - Tab Diag. 3 - Cabine 4 - Flasher Lights Left	Harness connector with bad contact	Check if the connector is properly fitted	13
					Harness connector fault	Check if it is passing signal through the harness connector.	
					Cables rupture	Check continuity	
					Ground wire problem	Check if the ground wire is in contact with metalic parts (Without painting), check if the wire is not loose.	
					Lamp burned out	Check if when the flasher light is activated the lamp is blinking.	
E0078	SCM1	1	Flasher Lights Right	Select on the monitor: 1 - Diagnostics 2 - Tab Diag. 3 - Cabine 4 - Flasher Lights Right	Harness connector with bad contact	Check if the connector is properly fitted	13
					Harness connector fault	Check if it is passing signal through the harness connector.	
					Cables rupture	Check continuity	
					Ground wire problem	Check if the ground wire is in contact with metalic parts (Without painting), check if the wire is not loose.	
					Lamp burned out	Check if when the flasher light is actuated the lamp is blinking.	
E0081	SCM1	1	SCM 1 Main Power Relay	Seletc on the monitor: 1- Diagnostcis 2 - Tab Diag. 3 - SCM1 4 - SCM1 Main Power Relay Result: When acioned will active the emergency stop.	Module internal fault	Contact the manufacturer	
E0256	SCM2	2	Fcm2 Battery Supply	Seletc on the monitor: 1- Diagnostcis 2 - Tab Diag. 3 - SCM 2 4 - SCM 2 Battery Supply	Poles oxidation	Check if it has oxidation on the poles and remove the oxidation.	3
					electrolyte low level	Check the electrolyte level, if it is below the mark, complete with DESTILATED WATER.	
					Lost the capacity of maintain the charge.	Check if the electrolyte is translucid, if it is cloudy, replace the battery.	
E0257	SCM2	2	SCM2 Key Supply	Seletc on the monitor: 1- Diagnostcis 2 - Tab Diag. 3 - SCM 2 4 - SCM 2 Key Supply	Fuse burned out	Replace the fuse	3
					Relay 19 burned out	Replace the relay	
					Harness connector with bad contact	Check if the connector is properly fitted	
					Cables rupture	Check continuity	

Troubleshooting of FAULTS (continued)

Fault Code	Module	SCM that uses	Code Description	1st Diagnostics	Possible causes	What to do	Page on Wiring Diagram
E0258	SCM2	2	SCM2 8V Reference Tension	Select on the monitor: 1 - Diagnostics 2 - Tab Diag. 3 - SCM2 4 - SCM2 8V ref	Module internal fault	Contact the manufacturer	6
E0259	SCM2	2	SCM2 5V Reference 1 Tension	Select on the monitor: 1 - Diagnoestics 2 - Tab Diag. 3 - SCM2 4 - SCM2 5V ref1	Module internal fault	Contact the manufacturer	6
E0260	SCM2	2	SCM2 5V Reference 2 Tension	Select on the monitor: 1 - Diagnoestics 2 - Tab Diag. 3 - SCM2 4 - SCM2 5V ref2	Module internal fault	Contact the manufacturer	6
E0261	SCM2	2	SCM2 Backfeed Tension	Select on the monitor: 1 - Diagnostics 2 - Tab Diag. 3 - SCM2 4 - SCM2 Backfeed Sense	Relay 8	Replace the relay	3
					Harness connector with bad contact	Check if the connector is properly fitted	
					Harness connector fault	Check if it is passing signal through the harness connector.	
					Cables rupture	Check continuity	
E0262	SCM2	2	Swing elevator right foot	Select on the monitor: 1 - Diagnostics 2 - Tab Diag. 3 - Elevator 4 - Swing elevator right foot.	Harness connector with bad contact	Check if the connector is properly fitted	18
					Harness connector fault	Check if it is passing signal through the harness connector.	
					Cables rupture	Check continuity	
E0264	SCM2	2	Machine Ignition Key	-	Cables rupture	Check continuity	2
					Ignition Key Damaged	Try to do the ignition, if there is not signal, substitute the ignition key.	
E0266	SCM2	2	Low Level of Water on the Expansion Tank		Lack of coolant liquid	Complete with coolant liquid as shown at the machine manual.	14
					Sensor stick is stiffened	Check if there is something locking the open sensor and clean if it is necessary	
					Harness connector with bad contact	Check if the connector is properly fitted	
					Harness connector fault	Check if it is passing signal through the harness connector.	
					Cables rupture	Check continuity	
					Sensor damaged	Replace the sensor	

Troubleshooting of FAULTS (continued)

Fault Code	Module	SCM that uses	Code Description	1st Diagnostics	Possible causes	What to do	Page on Wiring Diagram
E0267	SCM2	2	Swing elevator left foot	Select on the monitor: 1 - Diagnostics 2 - Tab Diag. 3 - Elevator 4 - Swing elevator left foot.	Harness connector with bad contact	Check if the connector is properly fitted	18
					Harness connector fault	Check if it is passing signal through the harness connector.	
					Cables rupture	Check continuity	
E0269	SCM2	2	Hydraulic Oil Filter Switch	Select on the monitor: 1 - Diagnostics 2 - Tab Diag. 3 - Power 4 - Hydraulic Oil Filter Switch	Harness connector with bad contact	Check if the connector is properly fitted	14
					Harness connector fault	Check if it is passing signal through the harness connector.	
					Cables rupture	Check continuity	
					Switch damaged	Substitute the switch	
E0270 Only for machine with engine CASE IH 9L	SCM2	2	Fuel Filter Switch		Short circuit	Find the shor circuit and repair the harness.	14
					Harness connector with bad contact	Check if the connector is properly fitted	
					Harness connector fault	Check if it is passing signal through the harness connector.	
					Cables rupture	Check continuity	
					Filtro saturado	Replace the filter	
					Switch damaged	Substitute the switch	
E0271	SCM2	2	Hydraulic Oil Low Level Switch	Select on the monitor: 1 - Diagnostics 2 - Tab Diag. 3 - Power 4 - Hydraulic Oil Low Level Switch	Lack of hydraulic oil	Complete with hydraulic oil as shown at the machine manual.	14
					Short circuit	Find the shor circuit and repair the harness.	
					Harness connector with bad contact	Check if the connector is properly fitted	
					Harness connector fault	Check if it is passing signal through the harness connector.	
					Cables rupture	Check continuity	
					Saturated filter	Replace the filter	
					Switch damaged	Substitute the switch	
E0272	SCM2	2	Air Filter Switch	Select on the monitor: 1 - Diagnostics 2 - Tab Diag. 3 - Power 4 - Air Filter State	Harness connector with bad contact	Check if the connector is properly fitted	14
					Harness connector fault	Check if it is passing signal through the harness connector.	
					Cables rupture	Check continuity	
					Saturated filter	Replace the filter	

Troubleshooting of FAULTS (continued)

Fault Code	Module	SCM that uses	Code Description	1st Diagnostics	Possible causes	What to do	Page on Wiring Diagram
E0275	SCM2	2	Chopper Hydraulic Pressure	Select on the monitor: 1 - Diagnostics 2 - Tab Diag. 3 - Basic Harvester Functions 4 - Chopper Hydraulic Pressure	Harness connector with bad contact	Check if the connector is properly fitted	15
					Harness connector fault	Check if it is passing signal through the harness connector.	
					Cables rupture	Check continuity	
					Sensor damaged	Replace the sensor	
E0285	SCM2	2	Chopper Speed	Select on the monitor: 1 - Diagnostics 2 - Tab Diag. 3 - Basic Harvester Functions 4 - Chopper Speed	Sensor is not mounted rightly	Position the gear tooth at the sensor hole centre, the sensor must be with the light on the backwards of the sensor.	15
					Harness connector with bad contact	Check if the connector is properly fitted	
					Harness connector fault	Check if it is passing signal through the harness connector.	
					Cables rupture	Check continuity	
					Sensor is not mounted rightly	Check if when you turn the chopper rollers the led that is on the sensor backward is blinking, in negative case, remove the sensor and put the sensor more close of the gear tooth.	
					Damaged Sensor	Replace the sensor	
E0286	SCM2	2	Basecutter Speed	Select on the monitor: 1 - Diagnostics 2 - Tab Diag. 3 - Basic Harvester Functions 4 - Basecutter Speed	Sensor is not mounted rightly	Position the gear tooth at the sensor hole centre, the sensor must be with the light on the backwards of the sensor.	15
					Harness connector with bad contact	Check if the connector is properly fitted	
					Harness connector fault	Check if it is passing signal through the harness connector.	
					Cables rupture	Check continuity	
					Sensor mal montado	Check if when you turn the chopper rollers the led that is on the sensor backward is blinking, in negative case, remove the sensor and put the sensor more close of the gear tooth.	
					Damaged Sensor	Replace the sensor	

Troubleshooting of FAULTS (continued)

Fault Code	Module	SCM that uses	Code Description	1st Diagnostics	Possible causes	What to do	Page on Wiring Diagram
E0289	SCM2	2	Primary extractor rotation sensor	Select on the monitor: 1 - Diagnostics 2 - Tab Diag. 3 - Primary extractor 4 - Primary extractor fan speed	Sensor is not mounted rightly	Position the gear tooth at the sensor hole centre, the sensor must be with the light on the backwards of the sensor.	18
					Harness connector with bad contact	Check if the connector is properly fitted	
					Harness connector fault	Check if it is passing signal through the harness connector..	
					Cables rupture	Check continuity	
					Sensor is not mounted rightly	Check if when you turn the chopper rollers the led that is on the sensor backward is blinking, in negative case, remove the sensor and put the sensor more close of the gear tooth.	
					Sensor damaged	Replace the sensor	
E0291	SCM2	2	Radiator door proximity switch	Select on the monitor: 1 - Diagnostics 2 - Tab Diag. 3 - Engine 4 - Radiator door proximity switch	Service door is open	Close the door	15
					Even with the door closed, the problem continues.	Try to put the sensor close to the door	
					Harness connector with bad contact	Check if the connector is properly fitted	
					Cables rupture	Check continuity	
					Switch damaged	Replace the sensor	
E0295	SCM2	2	Hydraulic oil temperature	Select on the monitor: 1 - Diagnostics 2 - Tab Diag. 3 - Power 4 - Hydraulic oil temperature	Harness connector with bad contact	Check if the connector is properly fitted	14
					Harness connector fault	Check if it is passing signal through the harness connector.	
					Cables rupture	Check continuity	
					Sensor damaged	Replace the sensor	
					Ground wire problem	Check the ground	

Troubleshooting of FAULTS (continued)

Fault Code	Module	SCM that uses	Code Description	1st Diagnostics	Possible causes	What to do	Page on Wiring Diagram
E0297	SCM2	2	Primary Extractor fan PWM current	Select on the monitor: 1 - Diagnostics 2 - Tab Diag. 3 - Primary Extractor 4 - Primary Extractor fan PWM current	Harness connector with bad contact	Check if the connector is properly fitted	18
					Harness connector fault	Check if it is passing signal through the harness connector.	
					Cables rupture	Check continuity	
					Coil burned out	Replace the coil.	
E0298	SCM2	2	Billet lenght valve current	Select on the monitor: 1 - Diagnostics 2 - Tab Diag. 3 - Basic Harvester Functions 4 - Billet lenght valve current	Harness connector with bad contact	Check if the connector is properly fitted	18
					Harness connector fault	Check if it is passing signal through the harness connector.	
					Cables rupture	Check continuity	
					Coil burned out	Replace the coil.	
E0300	SCM2	2	Radiator fan proportional valve		Harness connector with bad contact	Check if the connector is properly fitted	14
					Harness connector fault	Check if it is passing signal through the harness connector.	
					Cables rupture	Check continuity	
					Coil burned out	Replace the coil.	
E0301	SCM2	2	Cranking enable relay	Select on the monitor: 1 - Diagnostics 2 - Tab Diag. 3 - Power 4 - Cranking enable relay	Relay burned out	Replace the relay	1
					Fuse burned out	Replace the fuse	
					Harness connector with bad contact	Check if the connector is properly fitted	
					Harness connector fault	Check if it is passing signal through the harness connector.	
					Cables rupture	Check continuity	
					Ground wire problem	Check the ground	
E0302	SCM2	2	Backup alarm	Select on the monitor: 1 - Diagnostics 2 - Tab Diag. 3 - General 4 - Backup alarm	Harness connector with bad contact	Check if the connector is properly fitted	14
					Harness connector faulty	Check if it is passing signal through the harness connector.	
					Cables rupture	Check continuity	
					Ground wire problem	Check if the ground wire is correctly fixed or if there is contamination at the ground point.	
					Backup alarm burned out	Replace the backup alarm	

Troubleshooting of FAULTS (continued)

Fault Code	Module	SCM that uses	Code Description	1st Diagnostics	Possible causes	What to do	Page on Wiring Diagram
E0304	SCM2	2	Horn compressor relay	Select on the monitor: 1 - Diagnostics 2 - Tab Diag. 3 - Cabine 4 - Horn compressor relay	Harness connector with bad contact	Check if the connector is properly fitted	14
					Harness connector faulty	Check if it is passing signal through the harness connector.	
					Cables rupture	Check continuity	
					Ground wire problem	Check if the ground wire is correctly fixed or if there is contamination at the ground point.	
					Relay 11 burned out	Replace the relay	
E0305	SCM2	2	Elevator pilot valve	Select on the monitor: 1 - Diagnostics 2 - Tab Diag. 3 - Pilot 4 - Pilot valve elevator block	Harness connector with bad contact	Check if the connector is properly fitted	19
					Harness connector faulty	Check if it is passing signal through the harness connector.	
					The lock that holds the terminal on the connector is broken	Replace the connector	
					Cables rupture	Check continuity	
					Ground wire problem	Check if the ground wire is correctly fixed or if there is contamination at the ground point.	
					Coil burned out	Replace the coil.	
E0306	SCM2	2	Open the flap	Select on the monitor: 1 - Diagnostics 2 - Tab Diag. 3 - Elevator 4 - Bin flap out	Harness connector with bad contact	Check if the connector is properly fitted	19
					Harness connector faulty	Check if it is passing signal through the harness connector.	
					The lock that holds the terminal on the connector is broken	Replace the connector	
					Cables rupture	Check continuity	
					Ground wire problem	Check if the ground wire is correctly fixed or if there is contamination at the ground point.	
					Coil burned out	Replace the coil.	

Troubleshooting of FAULTS (continued)

Fault Code	Module	SCM that uses	Code Description	1st Diagnostics	Possible causes	What to do	Page on Wiring Diagram
E0307	SCM2	2	Close the flap	Select on the monitor: 1 - Diagnostics 2 - Tab Diag. 3 - Elevator 4 - Bin flap in	Harness connector with bad contact	Check if the connector is properly fitted	19
					Harness connector faulty	Check if it is passing signal through the harness connector.	
					The lock that holds the terminal on the connector is broken	Replace the connector	
					Cables rupture	Check continuity	
					Ground wire problem	Check if the ground wire is correctly fixed or if there is contamination at the ground point.	
					Coil burned out	Replace the coil.	
E0308	SCM2	2	Primary Extractor fan on / off	Select on the monitor: 1 - Diagnostics 2 - Tab Diag. 3 - Primary Extractor 4 - Primary Extractor fan on / off	Harness connector with bad contact	Check if the connector is properly fitted	18
					Harness connector faulty	Check if it is passing signal through the harness connector.	
					The lock that holds the terminal on the connector is broken	Replace the connector	
					Cables rupture	Check continuity	
					Ground wire problem	Check if the ground wire is correctly fixed or if there is contamination at the ground point.	
					Coil burned out	Replace the coil.	
E0309	SCM2	2	Primary Extractor fan PWM	Select on the monitor: 1 - Diagnostics 2 - Tab Diag. 3 - Primary Extractor 4 - Primary Extractor fan PWM	Harness connector with bad contact	Check if the connector is properly fitted	18
					Harness connector faulty	Check if it is passing signal through the harness connector.	
					The lock that holds the terminal on the connector is broken	Replace the connector	
					Cables rupture	Check continuity	
					Ground wire problem	Check if the ground wire is correctly fixed or if there is contamination at the ground point.	
					Coil burned out	Replace the coil.	

Troubleshooting of FAULTS (continued)

Fault Code	Module	SCM that uses	Code Description	1st Diagnostics	Possible causes	What to do	Page on Wiring Diagram
E0310	SCM2	2	Billet lenght valve	Select on the monitor: 1 - Diagnostics 2 - Tab Diag. 3 - Basic Harvester Functions 4 - Billet lenght valve	Harness connector with bad contact	Check if the connector is properly fitted	18
					Harness connector faulty	Check if it is passing signal through the harness connector.	
					The lock that holds the terminal on the connector is broken	Replace the connector	
					Cables rupture	Check continuity	
					Ground wire problem	Check if the ground wire is correctly fixed or if there is contamination at the ground point.	
					Coil burned out	Replace the coil.	
E0311	SCM2	2	Parking brake	Select on the monitor: 1 - Diagnostics 2 - Tab Diag. 3 - General 4 - Parking brake	Harness connector with bad contact	Check if the connector is properly fitted	19
					Harness connector faulty	Check if it is passing signal through the harness connector.	
					The lock that holds the terminal on the connector is broken	Replace the connector	
					Cables rupture	Check continuity	
					Ground wire problem	Check if the ground wire is correctly fixed or if there is contamination at the ground point.	
					Coil burned out	Replace the coil.	
E0312	SCM2	2	Differential lock	Select on the monitor: 1 - Diagnostics 2 - Tab Diag. 3 - General 4 - Differential lock	Harness connector with bad contact	Check if the connector is properly fitted	19
					Harness connector faulty	Check if it is passing signal through the harness connector.	
					The lock that holds the terminal on the connector is broken	Replace the connector	
					Cables rupture	Check continuity	
					Ground wire problem	Check if the ground wire is correctly fixed or if there is contamination at the ground point.	
					Coil burned out	Replace the coil.	

Troubleshooting of FAULTS (continued)

Fault Code	Module	SCM that uses	Code Description	1st Diagnostics	Possible causes	What to do	Page on Wiring Diagram
E0313	SCM2	2	Elevator slew left	Select on the monitor: 1 - Diagnostics 2 - Tab Diag. 3 - Elevator 4 - Elevator slew left	Harness connector with bad contact	Check if the connector is properly fitted	16
					Harness connector faulty	Check if it is passing signal through the harness connector.	
					The lock that holds the terminal on the connector is broken	Replace the connector	
					Cables rupture	Check continuity	
					Ground wire problem	Check if the ground wire is correctly fixed or if there is contamination at the ground point.	
					Coil burned out	Replace the coil.	
E0314	SCM2	2	Elevator slew right	Select on the monitor: 1 - Diagnostics 2 - Tab Diag. 3 - Elevator 4 - Elevator slew right	Harness connector with bad contact	Check if the connector is properly fitted	16
					Harness connector faulty	Check if it is passing signal through the harness connector.	
					The lock that holds the terminal on the connector is broken	Replace the connector	
					Cables rupture	Check continuity	
					Ground wire problem	Check if the ground wire is correctly fixed or if there is contamination at the ground point.	
					Coil burned out	Replace the coil.	
E0315	SCM2	2	Elevator down	Select on the monitor: 1 - Diagnostics 2 - Tab Diag. 3 - Elevator 4 - Elevator down	Harness connector with bad contact	Check if the connector is properly fitted	19
					Harness connector faulty	Check if it is passing signal through the harness connector.	
					The lock that holds the terminal on the connector is broken	Replace the connector	
					Cables rupture	Check continuity	
					Ground wire problem	Check if the ground wire is correctly fixed or if there is contamination at the ground point.	
					Coil burned out	Replace the coil.	

Troubleshooting of FAULTS (continued)

Fault Code	Module	SCM that uses	Code Description	1st Diagnostics	Possible causes	What to do	Page on Wiring Diagram
E0316	SCM2	2	Secondary extractor fan	Select on the monitor: 1 - Diagnostics 2 - Tab Diag. 3 - Secondary extractor 4 - Secondary extractor fan	Harness connector with bad contact	Check if the connector is properly fitted	19
					Harness connector faulty	Check if it is passing signal through the harness connector.	
					The lock that holds the terminal on the connector is broken	Replace the connector	
					Cables rupture	Check continuity	
					Ground wire problem	Check if the ground wire is correctly fixed or if there is contamination at the ground point.	
					Coil burned out	Replace the coil.	
E0317	SCM2	2	Coolant liquid fan		Harness connector with bad contact	Check if the connector is properly fitted	14
					Harness connector faulty	Check if it is passing signal through the harness connector.	
					The lock that holds the terminal on the connector is broken	Replace the connector	
					Cables rupture	Check continuity	
					Ground wire problem	Check if the ground wire is correctly fixed or if there is contamination at the ground point.	
					Coil burned out	Replace the coil.	
E0318	SCM2	2	Elevator conveyor direction forward	Select on the monitor: 1 - Diagnostics 2 - Tab Diag. 3 - Elevator 4 - Elevator conveyor direction forward	Harness connector with bad contact	Check if the connector is properly fitted	19
					Harness connector faulty	Check if it is passing signal through the harness connector.	
					The lock that holds the terminal on the connector is broken	Replace the connector	
					Cables rupture	Check continuity	
					Ground wire problem	Check if the ground wire is correctly fixed or if there is contamination at the ground point.	
					Coil burned out	Replace the coil.	

Troubleshooting of FAULTS (continued)

Fault Code	Module	SCM that uses	Code Description	1st Diagnostics	Possible causes	What to do	Page on Wiring Diagram
E0319	SCM2	2	Elevator conveyor direction reverse	Select on the monitor: 1 - Diagnostics 2 - Tab Diag. 3 - Elevator 4 - Elevator conveyor direction reverse	Harness connector with bad contact	Check if the connector is properly fitted	19
					Harness connector faulty	Check if it is passing signal through the harness connector.	
					The lock that holds the terminal on the connector is broken	Replace the connector	
					Cables rupture	Check continuity	
					Ground wire problem	Check if the ground wire is correctly fixed or if there is contamination at the ground point.	
					Coil burned out	Replace the coil.	
E0320	SCM2	2	Elevator up	Select on the monitor: 1 - Diagnostics 2 - Tab Diag. 3 - Elevator 4 - Elevator up	Harness connector with bad contact	Check if the connector is properly fitted	19
					Harness connector faulty	Check if it is passing signal through the harness connector.	
					The lock that holds the terminal on the connector is broken	Replace the connector	
					Cables rupture	Check continuity	
					Ground wire problem	Check if the ground wire is correctly fixed or if there is contamination at the ground point.	
					Coil burned out	Replace the coil.	
E0321	SCM2	2	Basecutter / Chopper Forward	Select on the monitor: 1 - Diagnostics 2 - Tab Diag. 3 - Basic Harvester Functions 4 - Basecutter / Chopper Forward	Harness connector with bad contact	Check if the connector is properly fitted	18
					Harness connector faulty	Check if it is passing signal through the harness connector.	
					The lock that holds the terminal on the connector is broken	Replace the connector	
					Cables rupture	Check continuity	
					Ground wire problem	Check if the ground wire is correctly fixed or if there is contamination at the ground point.	
					Coil burned out	Replace the coil.	

Troubleshooting of FAULTS (continued)

Fault Code	Module	SCM that uses	Code Description	1st Diagnostics	Possible causes	What to do	Page on Wiring Diagram
E0322	SCM2	2	Basecutter / Chopper Reverse	Select on the monitor: 1 - Diagnostics 2 - Tab Diag. 3 - Basic Harvester Functions 4 - Basecutter / Chopper Reverse	Harness connector with bad contact	Check if the connector is properly fitted	18
					Harness connector faulty	Check if it is passing signal through the harness connector.	
					The lock that holds the terminal on the connector is broken	Replace the connector	
					Cables rupture	Check continuity	
					Ground wire problem	Check if the ground wire is correctly fixed or if there is contamination at the ground point.	
					Coil burned out	Replace the coil.	
E0325	SCM2	2	Secondary extractor hood slew left	Select on the monitor: 1 - Diagnostics 2 - Tab Diag. 3 - Secondary Extractor 4 - Secondary extractor hood slew left	Harness connector with bad contact	Check if the connector is properly fitted	19
					Harness connector faulty	Check if it is passing signal through the harness connector.	
					The lock that holds the terminal on the connector is broken	Replace the connector	
					Cables rupture	Check continuity	
					Ground wire problem	Check if the ground wire is correctly fixed or if there is contamination at the ground point.	
					Coil burned out	Replace the coil.	
E0326	SCM2	2	Secondary extractor hood slew right	Select on the monitor: 1 - Diagnostics 2 - Tab Diag. 3 - Secondary Extractor 4 - Secondary extractor hood slew right	Harness connector with bad contact	Check if the connector is properly fitted	19
					Harness connector faulty	Check if it is passing signal through the harness connector.	
					The lock that holds the terminal on the connector is broken	Replace the connector	
					Cables rupture	Check continuity	
					Ground wire problem	Check if the ground wire is correctly fixed or if there is contamination at the ground point.	
					Coil burned out	Replace the coil.	
E0329	SCM2	2	Brush A actuator	Select on the monitor: 1 - Diagnostics 2 - Tab Diag. 3 - Engine 4 - Brush actuator h-bridge A	Harness connector with bad contact	Check if the connector is properly fitted	For machines with rotate screen page 14
					Harness connector faulty	Check if it is passing signal through the harness connector.	
					Cables rupture	Check continuity	
					Brush motor defective	Replace the motor	

Troubleshooting of FAULTS (continued)

Fault Code	Module	SCM that uses	Code Description	1st Diagnostics	Possible causes	What to do	Page on Wiring Diagram
E0330	SCM2	2	Brush B actuator	Select on the monitor: 1 - Diagnostics 2 - Tab Diag. 3 - Engine 4 - Brush actuator h-bridge B	Harness connector with bad contact	Check if the connector is properly fitted	For machines with rotate screen page 14
					Harness connector faulty	Check if it is passing signal through the harness connector.	
					Cables rupture	Check continuity	
					Brush motor defective	Change the motor	
E0331	SCM2	2	Brush C actuator	Select on the monitor: 1 - Diagnostics 2 - Tab Diag. 3 - Engine 4 - Brush actuator h-bridge C	Harness connector with bad contact	Check if the connector is properly fitted	For machines with rotate screen page 14
					Harness connector faulty	Check if it is passing signal through the harness connector.	
					Cables rupture	Check continuity	
					Brush motor defective	Change the motor	
E0332	SCM2	2	Brush D actuator	Select on the monitor: 1 - Diagnostics 2 - Tab Diag. 3 - Engine 4 - Brush actuator h-bridge A	Harness connector with bad contact	Check if the connector is properly fitted	For machines with rotate screen page 14
					Harness connector faulty	Check if it is passing signal through the harness connector.	
					Cables rupture	Check continuity	
					Brush motor defective	Change the motor	
E0333	SCM2	2	Front wiper A	Select on the monitor: 1 - Diagnostics 2 - Tab Diag. 3 - Cabine 4 - Front wiper h-bridge A	Harness connector with bad contact	Check if the connector is properly fitted	10
					Harness connector faulty	Check if it is passing signal through the harness connector.	
					Cables rupture	Check continuity	
					Motor defective	Change the motor	
E0334	SCM2	2	Front wiper B	Select on the monitor: 1 - Diagnostics 2 - Tab Diag. 3 - Cabine 4 - Front wiper h-bridge B	Harness connector with bad contact	Check if the connector is properly fitted	10
					Harness connector faulty	Check if it is passing signal through the harness connector.	
					Cables rupture	Check continuity	
					Motor defective	Change the motor	
E0335	SCM2	2	Front wiper C	Select on the monitor: 1 - Diagnostics 2 - Tab Diag. 3 - Cabine 4 - Front wiper h-bridge C	Harness connector with bad contact	Check if the connector is properly fitted	10
					Harness connector faulty	Check if it is passing signal through the harness connector.	
					Cables rupture	Check continuity	
					Motor defective	Change the motor	

Troubleshooting of FAULTS (continued)

Fault Code	Module	SCM that uses	Code Description	1st Diagnostics	Possible causes	What to do	Page on Wiring Diagram
E0336	SCM2	2	Front wiper D	Select on the monitor: 1 - Diagnostics 2 - Tab Diag. 3 - Cabine 4 - Front wiper h-bridge D	Harness connector with bad contact	Check if the connector is properly fitted	10
					Harness connector faulty	Check if it is passing signal through the harness connector.	
					Cables rupture	Check continuity	
					Motor defective	Change the motor	
E0337	SCM2	2	SCM2 Power - FET	Select on the monitor: 1- Diagnostics 2 - Tab Diag. 3 - SCM3 4 - SCM2 Main power Resultado: When actionated actives the emergency stop.	Module internal fault	Contact the manufacturer	
E0512	SCM3	3	SCM3 Battery tension	Select on the monitor: 1 - Diagnostics 2 - Tab Diag. 3 - SCM3 4 - SCM3 Battery supply	Fuse burned out	Replace the fuse	1 and 7
					Relay 19 burned out	Replace the relay	
					Harness connector with bad contact	Check if the connector is properly fitted	
					Cables rupture	Check continuity	
					Poles oxidation	Check if it has oxidation on the poles and remove the oxidation.	
					electrolyte low level	Check the electrolyte level, if it is below the mark, complete with DESTILATED WATER.	
					Lost the capacity of maintain the charge.	Check if the electrolyte is translucid, if it is cloudy, replace the battery.	
E0513	SCM3	3	SCM3 Key tension	Select on the monitor: 1 - Diagnostics 2 - Tab Diag. 3 - SCM3 4 - SCM3 Key supply	Fuse burned out	Replace the fuse	1 and 7
					Relay 19 burned out	Replace the relay	
					Harness connector with bad contact	Check if the connector is properly fitted	
					Cables rupture	Check continuity	
E0514	SCM3	3	SCM3 8V Reference tension	Select on the monitor: 1 - Diagnostics 2 - Tab Diag. 3 - SCM3 4 - SCM3 8V ref	Module internal fault	Contact the manufacturer	7

Troubleshooting of FAULTS (continued)

Fault Code	Module	SCM that uses	Code Description	1st Diagnostics	Possible causes	What to do	Page on Wiring Diagram
E0515	SCM3	3	SCM3 5V Reference 1 tension	Select on the monitor: 1 - Diagnostics 2 - Tab Diag. 3 - SCM3 4 - SCM3 5V ref1	Module internal fault	Contact the manufacturer	7
E0516	SCM3	3	SCM3 5V Reference 2 tension	Select on the monitor: 1 - Diagnostics 2 - Tab Diag. 3 - SCM3 4 - SCM3 5V ref2	Module internal fault	Contact the manufacturer	7
E0517	SCM3	3	Backfeed tension SCM3	Select on the monitor: 1 - Diagnostics 2 - Tab Diag. 3 - SCM3 4 - SCM3 Backfeed sense	Relay 7	Replace the relay	3
					Harness connector with bad contact	Check if the connector is properly fitted	
					Harness connector faulty	Check if it is passing signal through the harness connector.	
					Cables rupture	Check continuity	
E0565	SCM3	3	Basecutter tilt increase	Select on the monitor: 1 - Diagnostics 2 - Tab Diag. 3 - Basic harvester functions 4 - Basecutter tilt increase	Harness connector with bad contact	Check if the connector is properly fitted	17
					Harness connector faulty	Check if it is passing signal through the harness connector.	
					Cables rupture	Check continuity	
					Ground wire problem	Check if the ground wire is correctly fixed or if there is contamination at the ground point.	
					The lock that holds the terminal on the connector is broken	Replace the connector	
					Coil burned out	Replace the coil.	
E0566	SCM3	3	Basecutter tilt decrease	Select on the monitor: 1 - Diagnostics 2 - Tab Diag. 3 - Basic harvester functions 4 - Basecutter tilt decrease	Harness connector with bad contact	Check if the connector is properly fitted	17
					Harness connector faulty	Check if it is passing signal through the harness connector.	
					Cables rupture	Check continuity	
					Ground wire problem	Check if the ground wire is correctly fixed or if there is contamination at the ground point.	

Troubleshooting of FAULTS (continued)

Fault Code	Module	SCM that uses	Code Description	1st Diagnostics	Possible causes	What to do	Page on Wiring Diagram
E0567	SCM3	3	Sidetrim left extend	Select on the monitor: 1 - Diagnostics 2 - Tab Diag. 3 - Sidetrim 4 - Sidetrim left extend	Harness connector with bad contact	Check if the connector is properly fitted	17
					Harness connector faulty	Check if it is passing signal through the harness connector.	
					Cables rupture	Check continuity	
					Ground wire problem	Check if the ground wire is correctly fixed or if there is contamination at the ground point.	
					The lock that holds the terminal on the connector is broken	Replace the connector	
					Coil burned out	Replace the coil.	
E0568	SCM3	3	Sidetrim left retract	Select on the monitor: 1 - Diagnostics 2 - Tab Diag. 3 - Sidetrim 4 - Sidetrim left retract	Harness connector with bad contact	Check if the connector is properly fitted	17
					Harness connector faulty	Check if it is passing signal through the harness connector.	
					Cables rupture	Check continuity	
					Ground wire problem	Check if the ground wire is correctly fixed or if there is contamination at the ground point.	
					The lock that holds the terminal on the connector is broken	Replace the connector	
					Coil burned out	Replace the coil.	
E0569	SCM3	3	Sidetrim right extend	Select on the monitor: 1 - Diagnostics 2 - Tab Diag. 3 - Sidetrim 4 - Sidetrim right extend	Harness connector with bad contact	Check if the connector is properly fitted	17
					Harness connector faulty	Check if it is passing signal through the harness connector.	
					Cables rupture	Check continuity	
					Ground wire problem	Check if the ground wire is correctly fixed or if there is contamination at the ground point.	
					The lock that holds the terminal on the connector is broken	Replace the connector	
					Coil burned out	Replace the coil.	

Troubleshooting of FAULTS (continued)

Fault Code	Module	SCM that uses	Code Description	1st Diagnostics	Possible causes	What to do	Page on Wiring Diagram
E0570	SCM3	3	Sidetrim right retract	Select on the monitor: 1 - Diagnostics 2 - Tab Diag. 3 - Sidetrim 4 - Sidetrim right retract	Harness connector with bad contact	Check if the connector is properly fitted	17
					Harness connector faulty	Check if it is passing signal through the harness connector.	
					Cables rupture	Check continuity	
					Ground wire problem	Check if the ground wire is correctly fixed or if there is contamination at the ground point.	
					The lock that holds the terminal on the connector is broken	Replace the connector	
					Coil burned out	Replace the coil.	
E0571	SCM3	3	Sidetrim left rotation forward	Select on the monitor: 1 - Diagnostics 2 - Tab Diag. 3 - Sidetrim 4 - Sidetrim left rotation forward	Harness connector with bad contact	Check if the connector is properly fitted	18
					Harness connector faulty	Check if it is passing signal through the harness connector.	
					Cables rupture	Check continuity	
					Ground wire problem	Check if the ground wire is correctly fixed or if there is contamination at the ground point.	
					The lock that holds the terminal on the connector is broken	Replace the connector	
					Coil burned out	Replace the coil.	
E0572	SCM3	3	Sidetrim left rotation reverse	Select on the monitor: 1 - Diagnostics 2 - Tab Diag. 3 - Sidetrim 4 - Sidetrim left rotation reverse	Harness connector with bad contact	Check if the connector is properly fitted	18
					Harness connector faulty	Check if it is passing signal through the harness connector.	
					Cables rupture	Check continuity	
					Ground wire problem	Check if the ground wire is correctly fixed or if there is contamination at the ground point.	
					The lock that holds the terminal on the connector is broken	Replace the connector	
					Coil burned out	Replace the coil.	

Troubleshooting of FAULTS (continued)

Fault Code	Module	SCM that uses	Code Description	1st Diagnostics	Possible causes	What to do	Page on Wiring Diagram
E0574	SCM3	3	Sidetrim right rotation forward	Select on the monitor: 1 - Diagnostics 2 - Tab Diag. 3 - Sidetrim 4 - Sidetrim right rotation forward	Harness connector with bad contact	Check if the connector is properly fitted	18
					Harness connector faulty	Check if it is passing signal through the harness connector.	
					Cables rupture	Check continuity	
					Ground wire problem	Check if the ground wire is correctly fixed or if there is contamination at the ground point.	
					The lock that holds the terminal on the connector is broken	Replace the connector	
					Coil burned out	Replace the coil.	
E0575	SCM3	3	Sidetrim right rotation reverse	Select on the monitor: 1 - Diagnostics 2 - Tab Diag. 3 - Sidetrim 4 - Sidetrim right rotation reverse	Harness connector with bad contact	Check if the connector is properly fitted	18
					Harness connector faulty	Check if it is passing signal through the harness connector.	
					Cables rupture	Check continuity	
					Ground wire problem	Check if the ground wire is correctly fixed or if there is contamination at the ground point.	
					The lock that holds the terminal on the connector is broken	Replace the connector	
					Coil burned out	Replace the coil.	
E0577	SCM3	3	Cropdivider left tilt in	Select on the monitor: 1 - Diagnostics 2 - Tab Diag. 3 - Basic Harvester Functions 4 - Cropdivider left tilt in	Harness connector with bad contact	Check if the connector is properly fitted	17
					Harness connector faulty	Check if it is passing signal through the harness connector.	
					Cables rupture	Check continuity	
					Ground wire problem	Check if the ground wire is correctly fixed or if there is contamination at the ground point.	
					The lock that holds the terminal on the connector is broken	Replace the connector	
					Coil burned out	Replace the coil.	

Troubleshooting of FAULTS (continued)

Fault Code	Module	SCM that uses	Code Description	1st Diagnostics	Possible causes	What to do	Page on Wiring Diagram
E0578	SCM3	3	Cropdivider left tilt out	Select on the monitor: 1 - Diagnostics 2 - Tab Diag. 3 - Basic Harvester Functions 4 - Cropdivider left tilt out	Harness connector with bad contact	Check if the connector is properly fitted	17
					Harness connector faulty	Check if it is passing signal through the harness connector.	
					Cables rupture	Check continuity	
					Ground wire problem	Check if the ground wire is correctly fixed or if there is contamination at the ground point.	
					The lock that holds the terminal on the connector is broken	Replace the connector	
					Coil burned out	Replace the coil.	
E0579	SCM3	3	Cropdivider right tilt in	Select on the monitor: 1 - Diagnostics 2 - Tab Diag. 3 - Basic Harvester Functions 4 - Cropdivider right tilt in	Harness connector with bad contact	Check if the connector is properly fitted	17
					Harness connector faulty	Check if it is passing signal through the harness connector.	
					Cables rupture	Check continuity	
					Ground wire problem	Check if the ground wire is correctly fixed or if there is contamination at the ground point.	
					The lock that holds the terminal on the connector is broken	Replace the connector	
					Coil burned out	Replace the coil.	
E0580	SCM3	3	Cropdivider right tilt out	Select on the monitor: 1 - Diagnostics 2 - Tab Diag. 3 - Basic Harvester Functions 4 - Cropdivider right tilt out	Harness connector with bad contact	Check if the connector is properly fitted	17
					Harness connector faulty	Check if it is passing signal through the harness connector.	
					Cables rupture	Check continuity	
					Ground wire problem	Check if the ground wire is correctly fixed or if there is contamination at the ground point.	
					The lock that holds the terminal on the connector is broken	Replace the connector	
					Coil burned out	Replace the coil.	

Troubleshooting of FAULTS (continued)

Fault Code	Module	SCM that uses	Code Description	1st Diagnostics	Possible causes	What to do	Page on Wiring Diagram
E0585	SCM3	3	Knock down roller up	Select on the monitor: 1 - Diagnostics 2 - Tab Diag. 3 - Basic Harvester Functions 4 - Knock down roller up	Harness connector with bad contact	Check if the connector is properly fitted	17
					Harness connector faulty	Check if it is passing signal through the harness connector.	
					Cables rupture	Check continuity	
					Ground wire problem	Check if the ground wire is correctly fixed or if there is contamination at the ground point.	
					The lock that holds the terminal on the connector is broken	Replace the connector	
					Coil burned out	Replace the coil.	
E0586	SCM3	3	Knock down roller down	Select on the monitor: 1 - Diagnostics 2 - Tab Diag. 3 - Basic Harvester Functions 4 - Knock down roller down	Harness connector with bad contact	Check if the connector is properly fitted	17
					Harness connector faulty	Check if it is passing signal through the harness connector.	
					Cables rupture	Check continuity	
					Ground wire problem	Check if the ground wire is correctly fixed or if there is contamination at the ground point.	
					The lock that holds the terminal on the connector is broken	Replace the connector	
					Coil burned out	Replace the coil.	
E0593	SCM3	3	SCM3 Power - FET	Select on the monitor: 1 - Diagnostics 2 - Tab Diag. 3 -SCM3 4 - SCM3 Main power Resulta: When actioned actives the emergency stop.	Module internal fault	Contact the manufacturer	
E1025	EDC		Fuel pressure sensor		Harness connector with bad contact	Check if the connector is properly fitted	
					Harness connector faulty	Check if it is passing signal through the harness connector.	
					Cables rupture	Check continuity	
					Fuel leakage	Check the fuel lines	
					Fuel pump	Check the fuel pump	
					Fuel filter	Replace the filter	
					Sensor damaged	Replace the sensor	

Troubleshooting of FAULTS (continued)

Fault Code	Module	SCM that uses	Code Description	1st Diagnostics	Possible causes	What to do	Page on Wiring Diagram
E1026	EDC		Oil pressure sensor	Select on the monitor: 1 - Diagnostics 2 - Tab Diag. 3 - Engine 4 -Engine oil press sensor	Harness connector with bad contact	Check if the connector is properly fitted	
					Harness connector faulty	Check if it is passing signal through the harness connector.	
					Cables rupture	Check continuity	
					Oil pump	Check the oil pump	
					Oil leakage	Find the leakage point and repair	
					Fuel filter	Replace the filter	
					Sensor damaged	Replace the sensor	
E1027	EDC		Turbo outlet pressure sensor	Select on the monitor: 1 - Diagnostics 2 - Tab Diag. 3 - Engine 4 - Turbo outlet press sensor	Harness connector with bad contact	Check if the connector is properly fitted	
					Harness connector faulty	Check if it is passing signal through the harness connector.	
					Cables rupture	Check continuity	
					Raditor obstrution	Check the radiator	
					Sensor damaged	Replace the sensor	
E1029	EDC		Engine coolant temperature sensor	Select on the monitor: 1 - Diagnostics 2 - Tab Diag. 3 - Engine 4 - Engine coolant temp sensor	Harness connector with bad contact	Check if the connector is properly fitted	
					Harness connector faulty	Check if it is passing signal through the harness connector.	
					Cables rupture	Check continuity	
					Sensor damaged	Replace the sensor	
E1030	EDC		Coolant level sensor	Select on the monitor: 1 - Diagnostics 2 - Tab Diag. 3 - Engine 4 - Coolant level sensor	Harness connector with bad contact	Check if the connector is properly fitted	
					Harness connector faulty	Check if it is passing signal through the harness connector.	
					Cables rupture	Check continuity	
					Sensor not mounted correctly	Mount the sensor in the correctly position	
					Sensor damaged	Replace the sensor	
E1031	EDC		System voltage	Select on the monitor: 1 - Diagnostics 2 - Tab Diag. 3 - Engine 4 - System voltage	Harness connector with bad contact	Check if the connector is properly fitted	
					Harness connector faulty	Check if it is passing signal through the harness connector.	
					Cables rupture	Check continuity	
					Problem with the alternator	Check the alternator	
					Sensor damaged	Replace the sensor	

Troubleshooting of FAULTS (continued)

Fault Code	Module	SCM that uses	Code Description	1st Diagnostics	Possible causes	What to do	Page on Wiring Diagram
E1032	EDC		Admission colector Air temperature sensor		Harness connector with bad contact	Check if the connector is properly fitted	
					Harness connector faulty	Check if it is passing signal through the harness connector.	
					Cables rupture	Check continuity	
					Sensor damaged	Replace the sensor	
E1033	EDC		Fuel temperature sensor	Select on the monitor: 1 - Diagnostics 2 - Tab Diag. 3 - Engine 4 - Fuel temperature sensor	Harness connector with bad contact	Check if the connector is properly fitted	
					Harness connector faulty	Check if it is passing signal through the harness connector.	
					Cables rupture	Check continuity	
					Sensor damaged	Replace the sensor	
E1034	EDC		Speed / Sincronism sensor		Harness connector with bad contact	Check if the connector is properly fitted	
					Harness connector faulty	Check if it is passing signal through the harness connector.	
					Cables rupture	Check continuity	
					Sensor damaged	Replace the sensor	
E1035	EDC		Engine timing setting mandatory		Engine timing is off	Set engine timing as shown at the engine manual	
E1036	EDC		Diferentes módulos de personalidades		CAN network faulty	Measure the network CAN resistance	
E1037	EDC		High auxiliary temperature		Harness connector with bad contact	Check if the connector is properly fitted	
					Harness connector faulty	Check if it is passing signal through the harness connector.	
					Cables rupture	Check continuity	
					Sensor damaged	Replace the sensor	
E1039	EDC		5V Sensor CC Feed suppy		Module internal fault	Contact the manufacturer	
E1040	EDC		Comunicação de enlace de dados J1939		CAN network faulty	Measure the CAN network resistance	

Troubleshooting of FAULTS (continued)

Fault Code	Module	SCM that uses	Code Description	1st Diagnostics	Possible causes	What to do	Page on Wiring Diagram
E1041	EDC		Injector cylinder 1		Harness connector with bad contact	Check if the connector is properly fitted	
					Harness connector faulty	Check if it is passing signal through the harness connector.	
					Cables rupture	Check continuity	
					Coil damaged	Replace the coil.	
					Injector damaged	Replace the injector	
					Proportional valve damaged	Replace the valve	
					EDC defective	Contact the manufacturer	
E1042	EDC		Injector cylinder 2		Harness connector with bad contact	Check if the connector is properly fitted	
					Harness connector faulty	Check if it is passing signal through the harness connector.	
					Cables rupture	Check continuity	
					Coil damaged	Replace the coil.	
					Injector damaged	Replace the injector	
					Proportional valve damaged	Replace proportional valve	
					EDC defective	Contact the manufacturer	
E1044	EDC		Injector cylinder 4		Harness connector with bad contact	Check if the connector is properly fitted	
					Harness connector faulty	Check if it is passing signal through the harness connector.	
					Cables rupture	Check continuity	
					Coil damaged	Replace the coil.	
					Injector damaged	Replace the injector	
					Proportional valve damaged	Replace the valve	
					EDC defective	Contact the manufacturer	
E1045	EDC		Injector cylinder 5		Harness connector with bad contact	Check if the connector is properly fitted	
					Harness connector faulty	Check if it is passing signal through the harness connector.	
					Cables rupture	Check continuity	
					Coil damaged	Replace the coil.	
					Injector damaged	Replace the injector	
					Proportional valve damaged	Replace the valve	
					EDC defective	Contact the manufacturer	

Troubleshooting of FAULTS (continued)

Fault Code	Module	SCM that uses	Code Description	1st Diagnostics	Possible causes	What to do	Page on Wiring Diagram
E1046	EDC		Injector cylinder 6		Harness connector with bad contact	Check if the connector is properly fitted	
					Harness connector faulty	Check if it is passing signal through the harness connector.	
					Cables rupture	Check continuity	
					Coil damaged	Replace the coil.	
					Injector damaged	Replace the injector	
					Proportional valve damaged	Replace the valve	
					EDC defective	Contact the manufacturer	
E1049	EDC		Digital sensor feeding		Module internal fault	Contact the manufacturer	
E1050	EDC		Secondary sensor of engine speed		Harness connector with bad contact	Check if the connector is properly fitted	
					Harness connector faulty	Check if it is passing signal through the harness connector.	
					Cables rupture	Check continuity	
					Coil damaged	Replace the coil.	
					Injector damaged	Replace the injector	
					Proportional valve damaged	Replace the valve	
E1051	EDC		Check program parameters		Module internal fault	Contact the manufacturer	
E1052	EDC		High auxiliary pressure		Harness connector with bad contact	Check if the connector is properly fitted	
					Harness connector faulty	Check if it is passing signal through the harness connector.	
					Cables rupture	Check continuity	
					Sensor damaged	Replace the sensor	
E1053	EDC		Auxiliary pressure sensor		Harness connector with bad contact	Check if the connector is properly fitted	
					Harness connector faulty	Check if it is passing signal through the harness connector.	
					Cables rupture	Check continuity	
					Sensor damaged	Replace the sensor	
E1054	EDC		Auxilary temperature sensor		Harness connector with bad contact	Check if the connector is properly fitted	
					Harness connector faulty	Check if it is passing signal through the harness connector.	
					Cables rupture	Check continuity	
					Sensor damaged	Replace the sensor	

Troubleshooting of FAULTS (continued)

Fault Code	Module	SCM that uses	Code Description	1st Diagnostics	Possible causes	What to do	Page on Wiring Diagram
E1055	EDC		Engine oil temperature sensor		Harness connector with bad contact	Check if the connector is properly fitted	
					Harness connector faulty	Check if it is passing signal through the harness connector.	
					Cables rupture	Check continuity	
					Sensor damaged	Replace the sensor	
E1056	EDC		Starter motor relay	Select on the monitor: 1 - Diagnostics 2 - Tab Diag. 3 - Power 4 - Crank enable relay Result: Turn on the machine engine	Harness connector with bad contact	Check if the connector is properly fitted	
					Harness connector faulty	Check if it is passing signal through the harness connector.	
					Cables rupture	Check continuity	
					Relay damaged	Replace the relay	
E1058	EDC		Common rail pressure valve		Harness connector with bad contact	Check if the connector is properly fitted	
					Harness connector faulty	Check if it is passing signal through the harness connector.	
					Cables rupture	Check continuity	
					Fuel pump	Check the fuel pump	
					Fuel filter	Check if the filters are dirty	
					Proportional valve damaged	Change the valve	
					Fuel line obstruction	Clean the fuel lines	
					Common rail pressure valve defective	Change the valve	
E1288	RHM	3	Knock down roller up	Select on the monitor: 1 - Diagnostics 2 - Tab Diag. 3 - Right handle module 4 - Knock down roller up Result:With the machine on after key the reading must be low. When the Button is pressed, the reading must be high	Wire discontinuity	Check the wires continuity	21
					Button internal fault	Replace the button	

Troubleshooting of FAULTS (continued)

Fault Code	Module	SCM that uses	Code Description	1st Diagnostics	Possible causes	What to do	Page on Wiring Diagram
E1289	RHM	3	Knock down roller down	Select on the monitor: 1 - Diagnostics 2 - Tab Diag. 3 - Right handle module 4 - Knock down roller down Result:With the machine on after key the reading must be low. When the Button is pressed, the reading must be high	Wire discontinuity	Check the wires continuity	21
					Button internal fault	Replace the button	
E1290	RHM	2	Secondary extractor hood slew left	Select on the monitor: 1 - Diagnostics 2 - Tab Diag. 3 - Right handle module 4 - Secondary extractor hood slew left Result:With the machine on after key the reading must be low. When the Button is pressed, the reading must be high	Wire discontinuity	Check the wires continuity	21
					Button internal fault	Replace the button	
E1291	RHM	2	Secondary extractor hood slew right	Select on the monitor: 1 - Diagnostics 2 - Tab Diag. 3 - Right handle module 4 - Secondary extractor hood slew right Result:With the machine on after key the reading must be low. When the Button is pressed, the reading must be high	Wire discontinuity	Check the wires continuity	21
					Button internal fault	Replace the button	
E1292	RHM	2	Engine throttle increase	Select on the monitor: 1 - Diagnostics 2 - Tab Diag. 3 - Right handle module 4 - Engine throttle increase Result:With the machine on after key the reading must be low. When the Button is pressed, the reading must be high	Wire discontinuity	Check the wires continuity	21
					Button internal fault	Replace the button	

Troubleshooting of FAULTS (continued)

Fault Code	Module	SCM that uses	Code Description	1st Diagnostics	Possible causes	What to do	Page on Wiring Diagram
E1293	RHM	2	Engine throttle decrease	Select on the monitor: 1 - Diagnostics 2 - Tab Diag. 3 - Right handle module 4 - Engine throttle decrease Result:With the machine on after key the reading must be low. When the Button is pressed, the reading must be high	Wire discontinuity	Check the wires continuity	21
					Button internal fault	Replace the button	
E1294	RHM	2	Harvesting function on	Select on the monitor: 1 - Diagnostics 2 - Tab Diag. 3 - Right handle module 4 - Harvesting function on Result:With the machine on after key the reading must be low. When the Button is pressed, the reading must be high	Wire discontinuity	Check the wires continuity	21
					Button internal fault	Replace the button	
E1296	RHM	2	Momentary parking brake switch	Select on the monitor: 1 - Diagnostics 2 - Tab Diag. 3 - Right handle module 4 - Parking brake mom on/off Result:With the machine on after key the reading must be low. When the Button is pressed, the reading must be high	Wire discontinuity	Check the wires continuity	21
					Button internal fault	Replace the button	
E1300	RHM	2	Momentary primary extracor fan switch	Select on the monitor: 1 - Diagnostics 2 - Tab Diag. 3 - Right handle module 4 - Primary extractor fan mom. On/off Result:With the machine on after key the reading must be low. When the Button is pressed, the reading must be high	Wire discontinuity	Check the wires continuity	21
					Button internal fault	Replace the button	

Troubleshooting of FAULTS (continued)

Fault Code	Module	SCM that uses	Code Description	1st Diagnostics	Possible causes	What to do	Page on Wiring Diagram
E1301	RHM	2	Momentary secondary extracor fan switch	Select on the monitor: 1 - Diagnostics 2 - Tab Diag. 3 - Right handle module 4 - Secondary extractor fan mom. On/off Result:With the machine on after key the reading must be low. When the Button is pressed, the reading must be high	Wire discontinuity	Check the wires continuity	21
					Button internal fault	Replace the button	
E1303	RHM	2	Momentary differential lock switch	Select on the monitor: 1 - Diagnostics 2 - Tab Diag. 3 - Right handle module 4 - Differential lock on/off Result:With the machine on after key the reading must be low. When the Button is pressed, the reading must be high	Wire discontinuity	Check the wires continuity	20
					Button internal fault	Replace the button	
E1304	RHM	1	Trailler container in	Select on the monitor: 1 - Diagnostics 2 - Tab Diag. 3 - Right handle module 4 - Trailler container in Result:With the machine on after key the reading must be low. When the Button is pressed, the reading must be high	Wire discontinuity	Check the wires continuity	20
					Button internal fault	Replace the button	
E1305	RHM	1	Trailler container out	Select on the monitor: 1 - Diagnostics 2 - Tab Diag. 3 - Right handle module 4 - Trailler container out Result:With the machine on after key the reading must be low. When the Button is pressed, the reading must be high	Wire discontinuity	Check the wires continuity	20
					Button internal fault	Replace the button	

Troubleshooting of FAULTS (continued)

Fault Code	Module	SCM that uses	Code Description	1st Diagnostics	Possible causes	What to do	Page on Wiring Diagram
E1306	RHM	1	Primary Extractor hood slew right	Select on the monitor: 1 - Diagnostics 2 - Tab Diag. 3 - Right handle module 4 -Primary Extractor hood slew right Result:With the machine on after key the reading must be low. When the Button is pressed, the reading must be high	Wire discontinuity	Check the wires continuity	20
					Button internal fault	Replace the button	
E1307	RHM	1	Primary Extractor hood slew left	Select on the monitor: 1 - Diagnostics 2 - Tab Diag. 3 - Right handle module 4 -Primary Extractor hood slew left Result:With the machine on after key the reading must be low. When the Button is pressed, the reading must be high	Wire discontinuity	Check the wires continuity	20
					Button internal fault	Replace the button	
E1308	RHM	2	Primary Extractor fan speed increase	Select on the monitor: 1 - Diagnostics 2 - Tab Diag. 3 - Right handle module 4 - Primary Extractor fan speed increase Result:With the machine on after key the reading must be low. When the Button is pressed, the reading must be high	Wire discontinuity	Check the wires continuity	20
					Button internal fault	Replace the button	
E1309	RHM	2	Primary Extractor fan speed decrease	Select on the monitor: 1 - Diagnostics 2 - Tab Diag. 3 - Right handle module 4 - Primary Extractor fan speed decrease Result:With the machine on after key the reading must be low. When the Button is pressed, the reading must be high	Wire discontinuity	Check the wires continuity	20
					Button internal fault	Replace the button	

Troubleshooting of FAULTS (continued)

Fault Code	Module	SCM that uses	Code Description	1st Diagnostics	Possible causes	What to do	Page on Wiring Diagram
E1311	RHM	1	Mometary Road / Field switch	Select on the monitor: 1 - Diagnostics 2 - Tab Diag. 3 - Right handle module 4 - Road / Field mode mom. Result:With the machine on after key the reading must be low. When the Button is pressed, the reading must be high	Wire discontinuity	Check the wires continuity	20
					Button internal fault	Replace the button	
E1312	RHM	1	Direction indicator right	Select on the monitor: 1 - Diagnostics 2 - Tab Diag. 3 - Right handle module 4 - Direction indicator right Result:With the machine on after key the reading must be low. When the Button is pressed, the reading must be high	Wire discontinuity	Check the wires continuity	20
					Button internal fault	Replace the button	
E1313	RHM	1	Direction indicator left	Select on the monitor: 1 - Diagnostics 2 - Tab Diag. 3 - Right handle module 4 - Direction indicator left Result:With the machine on after key the reading must be low. When the Button is pressed, the reading must be high	Wire discontinuity	Check the wires continuity	20
					Button internal fault	Replace the button	
E1314	RHM	2	Elevator raise	Select on the monitor: 1 - Diagnostics 2 - Tab Diag. 3 - Right handle module 4 - Elevator raise Result:With the machine on after key the reading must be low. When the Button is pressed, the reading must be high	Wire discontinuity	Check the wires continuity	20
					Button internal fault	Replace the button	

Troubleshooting of FAULTS (continued)

Fault Code	Module	SCM that uses	Code Description	1st Diagnostics	Possible causes	What to do	Page on Wiring Diagram
E1315	RHM	2	Elevator descend	Select on the monitor: 1 - Diagnostics 2 - Tab Diag. 3 - Right handle module 4 - Elevator descend Result:With the machine on after key the reading must be low. When the Button is pressed, the reading must be high	Wire discontinuity	Check the wires continuity	20
					Button internal fault	Replace the button	
E1316	RHM	3	Basecutter tilt increase	Select on the monitor: 1 - Diagnostics 2 - Tab Diag. 3 - Right handle module 4 - Basecutter tilt increase Result:With the machine on after key the reading must be low. When the Button is pressed, the reading must be high	Wire discontinuity	Check the wires continuity	20
					Button internal fault	Replace the button	
E1317	RHM	3	Basecutter tilt decrease	Select on the monitor: 1 - Diagnostics 2 - Tab Diag. 3 - Right handle module 4 - Basecutter tilt decrease Result:With the machine on after key the reading must be low. When the Button is pressed, the reading must be high	Wire discontinuity	Check the wires continuity	20
					Button internal fault	Replace the button	
E1318	RHM	3	Left hand sidetrim up	Select on the monitor: 1 - Diagnostics 2 - Tab Diag. 3 - Right handle module 4 - Left hand sidetrim up Result:With the machine on after key the reading must be low. When the Button is pressed, the reading must be high	Wire discontinuity	Check the wires continuity	20
					Button internal fault	Replace the button	

Troubleshooting of FAULTS (continued)

Fault Code	Module	SCM that uses	Code Description	1st Diagnostics	Possible causes	What to do	Page on Wiring Diagram
E1319	RHM	3	Left hand sidetrim down	Select on the monitor: 1 - Diagnostics 2 - Tab Diag. 3 - Right handle module 4 - Left hand sidetrim down Result:With the machine on after key the reading must be low. When the Button is pressed, the reading must be high	Wire discontinuity	Check the wires continuity	20
					Button internal fault	Replace the button	
E1321	RHM	1	Topper throw direction right	Select on the monitor: 1 - Diagnostics 2 - Tab Diag. 3 - Right handle module 4 - Handle SW right Result:With the machine on after key the reading must be low. When the Button is pressed, the reading must be high	Multifunctional handle defective	Open the multifuncional handle and check if the connectors are correctly mounted, in positive case the handle must be replaced.	21
E1322	RHM	1	Topper up	Select on the monitor: 1 - Diagnostics 2 - Tab Diag. 3 - Right handle module 4 - Handle SW up Result:With the machine on after key the reading must be low. When the Button is pressed, the reading must be high	Multifunctional handle defective	Open the multifuncional handle and check if the connectors are correctly mounted, in positive case the handle must be replaced.	21
E1323	RHM	1	Left cropdivider left down	Select on the monitor: 1 - Diagnostics 2 - Tab Diag. 3 - Right handle module 4 - Handle SW A2 Result:With the machine on after key the reading must be low. When the Button is pressed, the reading must be high	Multifunctional handle defective	Open the multifuncional handle and check if the connectors are correctly mounted, in positive case the handle must be replaced.	21

Troubleshooting of FAULTS (continued)

Fault Code	Module	SCM that uses	Code Description	1st Diagnostics	Possible causes	What to do	Page on Wiring Diagram
E1324	RHM	1	Right cropdivider left down	Select on the monitor: 1 - Diagnostics 2 - Tab Diag. 3 - Right handle module 4 - Handle SW B2 Result:With the machine on after key the reading must be low. When the Button is pressed, the reading must be high	Multifunctional handle defective	Open the multifuncional handle and check if the connectors are correctly mounted, in positive case the handle must be replaced.	21
E1325	RHM	1	Basecutter Up	Select on the monitor: 1 - Diagnostics 2 - Tab Diag. 3 - Right handle module 4 - Handle SW C1 Result:With the machine on after key the reading must be low. When the Button is pressed, the reading must be high	Multifunctional handle defective	Open the multifuncional handle and check if the connectors are correctly mounted, in positive case the handle must be replaced.	21
E1326	RHM	1	Left cropdivider up	Select on the monitor: 1 - Diagnostics 2 - Tab Diag. 3 - Right handle module 4 - Handle SW A1 Result:With the machine on after key the reading must be low. When the Button is pressed, the reading must be high	Multifunctional handle defective	Open the multifuncional handle and check if the connectors are correctly mounted, in positive case the handle must be replaced.	21
E1328	RHM	2	On / Off Basecutter	Select on the monitor: 1 - Diagnostics 2 - Tab Diag. 3 - Right handle module 4 - Handle SW S Result:With the machine on after key the reading must be low. When the Button is pressed, the reading must be high	Multifunctional handle defective	Open the multifuncional handle and check if the connectors are correctly mounted, in positive case the handle must be replaced.	21

Troubleshooting of FAULTS (continued)

Fault Code	Module	SCM that uses	Code Description	1st Diagnostics	Possible causes	What to do	Page on Wiring Diagram
E1329	RHM	1	Auto tracker	Select on the monitor: 1 - Diagnostics 2 - Tab Diag. 3 - Right handle module 4 - Handle SW M Result:With the machine on after key the reading must be low. When the Button is pressed, the reading must be high	Multifunctional handle defective	Open the multifuncional handle and check if the connectors are correctly mounted, in positive case the handle must be replaced.	21
E1330	RHM	2	On / Off Elevator	Select on the monitor: 1 - Diagnostics 2 - Tab Diag. 3 - Right handle module 4 - Handle SW E Result:With the machine on after key the reading must be low. When the Button is pressed, the reading must be high	Multifunctional handle defective	Open the multifuncional handle and check if the connectors are correctly mounted, in positive case the handle must be replaced.	21
E1331	RHM	2	Close the flap	Select on the monitor: 1 - Diagnostics 2 - Tab Diag. 3 - Right handle module 4 - Handle SW Min Result:With the machine on after key the reading must be low. When the Button is pressed, the reading must be high	Multifunctional handle defective	Open the multifuncional handle and check if the connectors are correctly mounted, in positive case the handle must be replaced.	21
E1332	RHM		Software emergency	Select on the monitor: 1 - Diagnostics 2 - Tab Diag. 3 - Right handle module 4 - Software emergency SW Result:With the machine on after key the reading must be low. When the Button is pressed, the reading must be high	Multifunctional handle defective	Open the multifuncional handle and check if the connectors are correctly mounted, in positive case the handle must be replaced.	21

Troubleshooting of FAULTS (continued)

Fault Code	Module	SCM that uses	Code Description	1st Diagnostics	Possible causes	What to do	Page on Wiring Diagram
E1333	RHM	2	Open the flap	Select on the monitor: 1 - Diagnostics 2 - Tab Diag. 3 - Right handle module 4 - Handle SW Plus Result:With the machine on after key the reading must be low. When the Button is pressed, the reading must be high	Multifunctional handle defective	Open the multifuncional handle and check if the connectors are correctly mounted, in positive case the handle must be replaced.	21
E1334	RHM	1	Basecutter down	Select on the monitor: 1 - Diagnostics 2 - Tab Diag. 3 - Right handle module 4 - Handle SW C2 Result:With the machine on after key the reading must be low. When the Button is pressed, the reading must be high	Multifunctional handle defective	Open the multifuncional handle and check if the connectors are correctly mounted, in positive case the handle must be replaced.	21
E1335	RHM	1	Right cropdivider left up	Select on the monitor: 1 - Diagnostics 2 - Tab Diag. 3 - Right handle module 4 - Handle SW B1 Result:With the machine on after key the reading must be low. When the Button is pressed, the reading must be high	Multifunctional handle defective	Open the multifuncional handle and check if the connectors are correctly mounted, in positive case the handle must be replaced.	21
E1340	RHM	2	Horn	Select on the monitor: 1 - Diagnostics 2 - Tab Diag. 3 - Right handle module 4 - Handle SW back right Result:With the machine on after key the reading must be low. When the Button is pressed, the reading must be high	Multifunctional handle defective	Open the multifuncional handle and check if the connectors are correctly mounted, in positive case the handle must be replaced.	21

Troubleshooting of FAULTS (continued)

Fault Code	Module	SCM that uses	Code Description	1st Diagnostics	Possible causes	What to do	Page on Wiring Diagram
E1341	RHM	1	Topper left slew	Select on the monitor: 1 - Diagnostics 2 - Tab Diag. 3 - Right handle module 4 - Handle SW left Result:With the machine on after key the reading must be low. When the Button is pressed, the reading must be high	Multifunctional handle defective	Open the multifuncional handle and check if the connectors are correctly mounted, in positive case the handle must be replaced.	21
E1342	RHM	1	Topper down	Select on the monitor: 1 - Diagnostics 2 - Tab Diag. 3 - Right handle module 4 - Handle SW down Result:With the machine on after key the reading must be low. When the Button is pressed, the reading must be high	Multifunctional handle defective	Open the multifuncional handle and check if the connectors are correctly mounted, in positive case the handle must be replaced.	21
E1343	RHM		Shift (s)	Select on the monitor: 1 - Diagnostics 2 - Tab Diag. 3 - Right handle module 4 - Handle SW back left Result:With the machine on after key the reading must be low. When the Button is pressed, the reading must be high	Multifunctional handle defective	Open the multifuncional handle and check if the connectors are correctly mounted, in positive case the handle must be replaced.	21
E1352	RHM	2	On / Off Primary Extractor	Select on the monitor: 1 - Diagnostics 2 - Tab Diag. 3 - Right handle module 4 - Primary extractor fan state Result:With the machine on after key the reading must be low. When the Button is pressed, the reading must be high	Wire discontinuity	Check the wires continuity	21
					Button internal fault	Replace the button	

Troubleshooting of FAULTS (continued)

Fault Code	Module	SCM that uses	Code Description	1st Diagnostics	Possible causes	What to do	Page on Wiring Diagram
E1353	RHM	2	On / Off secondary extractor	Select on the monitor: 1 - Diagnostics 2 - Tab Diag. 3 - Right handle module 4 - Secondary extractor fan state Result:With the machine on after key the reading must be low. When the Button is pressed, the reading must be high	Wire discontinuity	Check the wires continuity	21
					Button internal fault	Replace the button	
E1354	RHM	2	Parking brake	Select on the monitor: 1 - Diagnostics 2 - Tab Diag. 3 - Right handle module 4 - Parking brake Result:With the machine on after key the reading must be low. When the Button is pressed, the reading must be high	Wire discontinuity	Check the wires continuity	21
					Button internal fault	Replace the button	
E1359	RHM	1	Backlights		Wire discontinuity	Check the wires continuity	
					Button internal fault		
E1361	RHM	3	Left hand sidetrim forward	Select on the monitor: 1 - Diagnostics 2 - Tab Diag. 3 - Right handle module 4 - Left hand sidetrim forward Result:With the machine on after key the reading must be low. When the Button is pressed, the reading must be high	Wire discontinuity	Check the wires continuity	20
					Button internal fault	Replace the button	

Troubleshooting of FAULTS (continued)

Fault Code	Module	SCM that uses	Code Description	1st Diagnostics	Possible causes	What to do	Page on Wiring Diagram
E1362	RHM	3	Left hand sidetrim reverse	Select on the monitor: 1 - Diagnostics 2 - Tab Diag. 3 - Right handle module 4 - Left hand sidetrim reverse Result:With the machine on after key the reading must be low. When the Button is pressed, the reading must be high	Wire discontinuity	Check the wires continuity	20
					Button internal fault	Replace the button	
E1363	RHM	3	Right hand sidetrim forward	Select on the monitor: 1 - Diagnostics 2 - Tab Diag. 3 - Right handle module 4 - Right hand sidetrim forward Result:With the machine on after key the reading must be low. When the Button is pressed, the reading must be high	Wire discontinuity	Check the wires continuity	20
					Button internal fault	Replace the button	
E1364	RHM	3	Right hand sidetrim reverse	Select on the monitor: 1 - Diagnostics 2 - Tab Diag. 3 - Right handle module 4 - Right hand sidetrim reverse Result:With the machine on after key the reading must be low. When the Button is pressed, the reading must be high	Wire discontinuity	Check the wires continuity	20
					Button internal fault	Replace the button	

Troubleshooting of FAULTS (continued)

Fault Code	Module	SCM that uses	Code Description	1st Diagnostics	Possible causes	What to do	Page on Wiring Diagram
E1365	RHM	3	Right hand sidetrim up	Select on the monitor: 1 - Diagnostics 2 - Tab Diag. 3 - Right handle module 4 - Right hand sidetrim up Result:With the machine on after key the reading must be low. When the Button is pressed, the reading must be high	Wire discontinuity	Check the wires continuity	20
					Button internal fault	Replace the button	
E1366	RHM	3	Right hand sidetrim down	Select on the monitor: 1 - Diagnostics 2 - Tab Diag. 3 - Right handle module 4 - Right hand sidetrim down Result:With the machine on after key the reading must be low. When the Button is pressed, the reading must be high	Wire discontinuity	Check the wires continuity	20
					Button internal fault	Replace the button	
E1379	RHM	3	Left hand sidetrim forward	Select on the monitor: 1 - Diagnostics 2 - Tab Diag. 3 - Right handle module 4 - Left hand sidetrim forward Result:With the machine on after key the reading must be low. When the Button is pressed, the reading must be high	Wire discontinuity	Check the wires continuity	20
					Button internal fault	Replace the button	

Troubleshooting of FAULTS (continued)

Fault Code	Module	SCM that uses	Code Description	1st Diagnostics	Possible causes	What to do	Page on Wiring Diagram
E1380	RHM	3	Left hand sidetrim reverse	Select on the monitor: 1 - Diagnostics 2 - Tab Diag. 3 - Right handle module 4 - Left hand sidetrim reverse Result:With the machine on after key the reading must be low. When the Button is pressed, the reading must be high	Wire discontinuity	Check the wires continuity	20
					Button internal fault	Replace the button	
E1381	RHM	3	Right hand sidetrim forward	Select on the monitor: 1 - Diagnostics 2 - Tab Diag. 3 - Right handle module 4 - Right hand sidetrim forward Result:With the machine on after key the reading must be low. When the Button is pressed, the reading must be high	Wire discontinuity	Check the wires continuity	20
					Button internal fault	Replace the button	
E1382	RHM	3	Right hand sidetrim reverse	Select on the monitor: 1 - Diagnostics 2 - Tab Diag. 3 - Right handle module 4 - Right hand sidetrim reverse Result:With the machine on after key the reading must be low. When the Button is pressed, the reading must be high	Wire discontinuity	Check the wires continuity	20
					Button internal fault	Replace the button	

Troubleshooting of FAULTS (continued)

Fault Code	Module	SCM that uses	Code Description	1st Diagnostics	Possible causes	What to do	Page on Wiring Diagram
E1792	Eaton		JOYSTICK	Select on the monitor: 1 - Diagnostics 2 - Tab Diag. 3 - Eaton 4 - Joystick Result: With the macine on after key mode the reading must be 98% with the Joystick forward, -98% with the Joystick backwards, 98% with the Joystick to the right and -98% with th joystick to the left	Falha na rede CAN	Verificar a resitência da rede CAN com um multímetro na tomada de diagnóstico nos pinos C e D. A resistência deve ser de 60 ohms, caso contrário a CAN está aberta. Verificar resistores	8 and 4
					Harness connector with bad contact	Check if the connector is properly fitted	
					Harness connector faulty	Check if it is passing signal through the harness connector..	
					Cables rupture	Check continuity	
					Ground wire problem	Check if the ground wire is correctly fixed or if there is contamination at the ground point.	
					Defeito no Joystick	Substituir Joystick	
E1793	Eaton		Right drive pump sensor	Select on the monitor: 1 - Diagnostics 2 - Tab Diag. 3 - Eaton 4 - Right drive pump sensor Result: The value must be between + and - 3%	Lost the calibration	Select on the monitor: 1- Calibration 2 - Tab Calibration, and follow the calibration sequence For A8800 1° Pump displacement 2° Drive solenoid 3° Pump displacement (repeat) 4° Pump balance For A8000 1° Pump displacement	4
					Sensor without calibration	If when you did the electornic calibration the sensor still not calibrated, the mechanic must do the following: Select on the monitor: 1 - Diagnostics 2 - Tab Diag. 3 - Eaton 4 - Right drive pump sensor After adjust the monitor, loose the screws for sensor fixation.	
					Harness connector with bad contact	Check if the connector is properly fitted	
					Harness connector faulty	Check if it is passing signal through the harness connector.	
					Cables rupture	Check continuity	
					Sensor damaged	Replace the sensor	

Troubleshooting of FAULTS (continued)

Fault Code	Module	SCM that uses	Code Description	1st Diagnostics	Possible causes	What to do	Page on Wiring Diagram
E1794	Eaton		Right drive pump sensor	Select on the monitor: 1 - Diagnostics 2 - Tab Diag. 3 - Eaton 4 - Right drive pump sensor Result: This value can not be out of + or - 3%	Lost the calibration	Select on the monitor: 1- Calibration 2 - Tab Calibration, and follow the calibration sequence For A8800 1° Pump displacement 2° Drive solenoid 3° Pump displacement (repeat) 4° Pump balance For A8000 1° Pump displacement	4
					Harness connector with bad contact	Check if the connector is properly fitted	
					Harness connector faulty	Check if it is passing signal through the harness connector.	
					Cables rupture	Check continuity	
					Sensor without calibration	If when you did the electornic calibration the sensor still not calibrated, the mechanic must do the following: Select on the monitor: 1 - Diagnostics 2 - Tab Diag. 3 - Eaton 4 - Right drive pump sensor After adjust the monitor, loose the screws for sensor fixation.	
					Sensor damaged	Replace the sensor	
E1795	Eaton		Drive pump solenoid	Select on the monitor: 1 - Diagnostics 2 - Tab Diag. 3 - Eaton 4 - Drive pump solenoid	Harness connector with bad contact	Check if the connector is properly fitted	4
					Harness connector faulty	Check if it is passing signal through the harness connector.	
					Cables rupture	Check continuity	
					Coil damaged	Replace the coil.	

Troubleshooting of FAULTS (continued)

Fault Code	Module	SCM that uses	Code Description	1st Diagnostics	Possible causes	What to do	Page on Wiring Diagram
E1796	Eaton		Steering sensor	Select on the monitor: 1 - Diagnostics 2 - Tab Diag. 3 - Eaton 4 - Steering sensor Result: Aligned wheels = 2,5V Wheels to the right = 4,8V Wheels to the left = 0,2V	Lost the calibration	Select on the monitor: 1- Calibrations 2 - Tab Calibração, and follow this sequence to calibrate: For A8800 1º Pump displacement 2º Drive solenoid 3º Pump displacement (repeat) 4º Pump balance For A8000 1º Pump displacement	4
					Air presence on the steering system.	Take out the air.	
					Harness connector with bad contact	Check if the connector is properly fitted	
					Harness connector faulty	Check if it is passing signal through the harness connector.	
					Cables rupture	Check continuity	
					Sensor damaged	Replace the sensor	
					Internal defect on steering cilynder	Substitute the cilynder	
E1797	Eaton		Steering solenoid	Select on the monitor: 1 - Diagnostics 2 - Tab Diag. 3 - Eaton 4 - Steering solenoid	Harness connector with bad contact	Check if the connector is properly fitted	4
					Harness connector faulty	Check if it is passing signal through the harness connector.	
					Cables rupture	Check continuity	
					Coil damaged	Replace the coil.	
E1798	Eaton		Maestro voltage		Fuse burned out	Replace the fuse	2, 3 and 4
					Harness connector with bad contact	Check if the connector is properly fitted	
					Harness connector faulty	Check if it is passing signal through the harness connector.	
					Cables rupture	Check continuity	
					Ground wire problem	Check if the ground wire is correctly fixed or if there is contamination at the ground point.	

Troubleshooting of ALARMS

Alarm code	Code description	What to do
A1000	Basecutter pressure is too high	Check the choke reason
		Check on the monitor if the pressure choke is too low, follow the procedure below: 1 - Toolbox 2 - Tab Basecutter 3 - BaseC pressure choke
A1001	The operator is not on the operation seat.	To operate and maintain the harvester functions on, the operator must be seated on the operation seat.
A1002	The operator pushed the emergency button.	Turn off the machine and than release the emergency button
A1100	Feedback tension on SCM1 detected	Contact the manufacturer
A1101	FCM1 Emergency Stop OFF	Release the red button
A1200	Low fuel level	Fill the machine tank with fuel
A1202	Alternator tension is too low	Check the cables and connectors
		Change the alternator
A1203	Alternator is overloading	Check the cables and connectors
		Replace the alternator
A2000	Chopper pressure is too high	Check the choke reason
A2001	Invalid primary extractor speed value.	Check if the extractor fan is turning
		Check if the sensor is reading the speed turn the fan and check if the led on the back of the sensor is blinking.
A2002	Primary extractor rotation can not be read.	Check to find what is obstructing the communication between the sensor and the module.
A2003	Extractor pressure is too high	Check the choke reason
A2100	Feedback tension on SCM2 detected	Contact the manufacturer
A2101	FCM2 Emergency Stop OFF	Release the emergency button.
A2103	Air filter is obstructed	Clean the filter
		Check if there is power supply passing by the harness connectors.

Troubleshooting of ALARMS (continued)

Alarm code	Code description	What to do
A2104	Lack of coolant liquid	Add coolant liquid in the expansion tank
		Check if the switch is locked or improperly mounted.
		Check if there is power supply passing by the harness connectors.
A2105	Lack of engine oil	Add oil in the engine following the operator´s manual procedure.
A2106	Saturated engine oil filter	Change the filter
A2108	Impossibily to turn on the machine because the transmission pumps or the joystick are not in the neutral mode.	Check if the joystick is in neutral mode.
A2109	Service door is open	Close the service door
A2110	The engine does not turn on because the level of hydraulic oil is low.	Complete the level of hydraulic oil
A2111	Low level of coolant liquid	Check the level of coolant liquid
		Check if there is leakage on the cooling lines
		Check the water pump
A2112	Engine oil low pressure	Check the oil level
		Check if the oil filter is saturated
		Check the oil pump
A2113	Engine high temperature	Clean the cooling system fixed screen
		Check if the radiator is dirty
A2115	Engine will turn off	Check the system irregularities
A2117	Engine speed decreases because the engine high temperature.	Clean the cooling system fixed screen
		Check if the radiator is dirty
A2118	Engine speed decrease because of the high intake air temperature	Clean the radiators
A2119	Engine speed decreases because the turbo high pressure.	Check the cleaness / Obstruction of the radiators
		Check the air tubes
A2120	Engine speed decreases because the engine oil high temperature.	Check the engine oil filters
		Clean the cooling system fixed screen

Troubleshooting of ALARMS (continued)

Alarm code	Code description	What to do
A2121	Engine speed decreases because of the engine oil low pressure.	Check the engine oil level
		Check for oil leakage
		Check the oil pump
A2123	Engine speed decreases because of the engine high temperature.	Clean the cooling system fixed screen
		Check if the radiator is dirty
A2124	Engine speed decreases because of the intake air high temperatures.	Clean the radiators
A2125	Low pressure of engine oil	Check the oil level
		Check if the oil filter is saturated
		Check the oil pump
A2127	High temperature of engine oil	Clean the cooling system fixed screen
		Check if the radiator is dirty
A2131	Press the implement protection button	Press the button before to turn on the machine, after the machine is turned on release the button.
A2132	Low level of hydraulic oil	Complete the level of hydraulic oil
A2133	Low level of hydraulic oil	Find the place of leakage and repair. Then fill the oil tank with oil.
A2134	Saturated fuel filter	Replace filter
A2135	Saturated oil filter	Replace filter
A2136	High temperature of hydralic oil	Clean the cooling system fixed screen
		Check if the radiator is dirty
A2201	Fuel with water	Drain the water from the filter
A2204	Service door is open	Check the door lock
		Check if there was no cable breakage
A2205	Engine speed decreases because of the fuel high temperature.	Clean the cooling system fixed screen
		Check if the radiator is dirty
A2206	Engine speed decreases because of the fuel filter is saturated.	Replace the fuel filter

Troubleshooting of ALARMS (continued)

Alarm code	Code description	What to do
A2207	Fuel high temperature	Clean the cooling system fixed screen
		Check if the radiator is dirty
A2208	Common rail low pressure	Check the fuel filters
		Check the fuel lines
		Check the fuel pump
		Check the proportional valve
A2209	Common rail high pressure	Check the fuel filters
		Check the fuel lines
		Check the fuel pump
		Check the proportional valve
A2210	Common rail pressure loss	Check the fuel filters
		Check the fuel lines
		Check the fuel pump
		Check the proportional valve
A2211	Fuel high temperature	Clean the cooling system fixed screen
		Check if the radiator is dirty
A2212	Common rail low pressure	Check the fuel filters
		Check the fuel lines
		Check the fuel pump
		Check the proportional valve
A2213	Common rail high pressure	Check the fuel filters
		Check the fuel lines
		Check the fuel pump
		Check the proportional valve

Troubleshooting of ALARMS (continued)

Alarm code	Code description	What to do
A2214	Service door is open	Check the service door locks
		Check for breaking cable
A3100	SCM3 Feedback tension detected	Contact the manufacturer
A3101	FCM3 Emergency Stop OFF	Release the red button
A5000	SCM1 not detected	Check the CAN network resistance, correct value is 60 0hms
A5001	SCM1 lost of communication	Check the CAN network resistance, correct value is 60 0hms
A5002	SCM2 not detected	Check the CAN network resistance, correct value is 60 0hms
A5003	SCM2 lost of communication	Check the CAN network resistance, correct value is 60 0hms
A5004	SCM3 not detected	Check the CAN network resistance, correct value is 60 0hms
A5005	SCM3 lost of communication	Check the CAN network resistance, correct value is 60 0hms
A5006	ECM not detected	Check the CAN network resistance, correct value is 60 0hms
A5007	ECM lost of communication	Check the CAN network resistance, correct value is 60 0hms
A5010	RHM not detected	Check the CAN network resistance, correct value is 60 0hms
A5011	RHM lost of communication	Check the CAN network resistance, correct value is 60 0hms

Table of codes and description of failure severity

0	Data valid but Above Normal Operating Range - Most severe level
1	Data valid but Below Normal Operating Range - Most severe level
2	Data erratic, intermittent or incorrect
3	Voltage above normal, or shorted to high source
4	Voltage below normal, or shorted to low source
5	Current below normal or open circuit
6	current above normal or grounded circuit
7	Mechanical system not responding or out of adjustement
8	Abnormal frequency or pulsewidth period
9	Abnormal update rate
10	Abnormal rate of change
11	Root cause not known
12	Bad intelligent device or component
13	Out of calibration
14	Special instructions
15	Data valid but Above Normal Operating Range - Least severe level
16	Data valid but Above Normal Operating Range - Moderately severe level
17	Data valid but Below Normal Operating Range - Least severe level
18	Data valid but Below Normal Operating Range - Moderately severe level
19	Received network data in error
20	Reserved for SAE assignment
21	Reserved for SAE assignment
22	Reserved for SAE assignment
23	Reserved for SAE assignment
24	Reserved for SAE assignment
25	Reserved for SAE assignment
26	Reserved for SAE assignment
27	Reserved for SAE assignment
28	Reserved for SAE assignment
29	Reserved for SAE assignment
30	Reserved for SAE assignment
31	Not available or condition exists

NOTES:

NOTES:

CASE IH
AGRICULTURE

FOR THOSE WHO DEMAND MORE